Planning and Development
510 North Baker Street
Mount Dora, Florida 32757
352-735-7112
Email: plandev@cityofmountdora.com

PLANNING & ZONING COMMISSION

City Hall Board Room

January 15, 2025 at 10:00 AM

I. Call to Order

II. Roll Call with Determination of Quorum

III. Approval of Minutes

IV. Public participation/hearing for non-agenda items

V. New Business

A. **Request for Site Plan;** Freddy's Frozen Custard & Steakburgers (Project Name)**(TABLED)**; Eudora Road (Location); Eudora Road, LLC (Owner); Eudora Road, LLC (Applicant); Germana Engineering & Associates, Inc. (Engineer); Green Consulting Group, Inc. (Landscape Architect). GMLV Architecture, Inc. (Architect). SP23-08.

B. **Request for PUD Amendment;** Mount Dora Small Bay Warehouses(Project Name); 1649 Lincoln Avenue (Site Address); Lincoln 1649, LLC (Owner); Metro Architecture Partnership (Applicant); Tawill Engineering, Inc. (Engineer); Landscape Dynamics (Landscape Architect). Project No, PUD24-01.

C. **Sunshine Law Presentation:** City Attorney, Andrew Hand

VI. Announcement of next scheduled meeting date

A. Next regularly scheduled meeting date: February 19, 2025

VII. Adjournment

NOTICE: For purposes of Section 286.011, Florida Statutes, two (2) or more members of the City Council may be present at this meeting and this meeting may be considered a City Council meeting although no decision of the City Council will be made at this meeting and the City Council shall comply with the requirements of controlling State law in every respect.

NOTICE: If any person decides to appeal any decisions made at this meeting with respect to any matter considered at this meeting, such person may need a record of these proceedings. For such purpose, a person may need to ensure that a verbatim record of the proceedings is made which record includes the testimony and evidence upon which the appeal is to be based. The City shall not make or perfect such a record. Section 286.0105, Florida Statutes.

NOTICE: In accordance with the Americans with Disabilities Act ("ADA") and Florida Statutes, Section 286.26, persons with disabilities needing a reasonable accommodation to participate in a public hearing or meeting should contact the City of Mount Dora's ADA Coordinator at least 48 hours prior to the proceeding. The ADA Coordinator may be contacted by phone at 352-735-7126, ext. 1111 or by email at clerk@cityofmountdora.com. If hearing impaired, telephone the Florida Relay Service numbers (800) 955-8771 (TDD) or (800) 955- 8770 (Voice) for assistance.

CITY OF MOUNT DORA, FLORIDA

PLANNING AND ZONING COMMISSION MINUTES

December 18, 2024

I. Call to Order

Having been duly advertised as required by law Chairman, Miles Beach called the regular meeting of the Planning and Zoning Commission to order at 10:01 a.m. on Wednesday, December 18, 2024.

II. Roll Call with Determination of Quorum

Present: Miles Beach, Adrian Coombes, Tom Dring, Kris Haukoos, Barbara Tietmeyer, Harris Turner

City Staff and Attorney: Michele Janiszewski, Senior Planner; Ryan Winkler, Senior Planner; Whitney Scott, Administrative Coordinator; Adam Sumner, Deputy Planning Director, Andrew Hand, City Attorney

Presenters: Andy Hawkins; *One Oak Development,* Mr. Sam Medina; *Sloan Engineering Group,*

III. Approval of Minutes

On a motion by Mr. Coombes, seconded by Ms. Tietmeyer, the board voted to approve the meeting minutes dated November 20, 2024; unanimously with a 5- 0 vote.

Ms. Haukoos arrived at 10:02 a.m.

IV. Public participation/hearing for non-agenda items

None

V. New Business

A. Request for Site Plan; Chick fil-A (project name); US Hwy 441 (Site Address); Simpson Family Partnership, LTD. (Owner); Bohler Engineering FL, LLC (Applicant); Bohler Engineering FL, LLC; MLD Studio Landscape Architecture (Landscape Architect); GDP Group (Architect). Project No. SP24-11.

Ms. Janiszewski provided a brief summary of the proposed application and stated that staff recommends approval of the above-referenced Site Plan request.

Discussion regarding the logic for the project being approved by the county vs. the city.

Ms. Janiszewski stated that it was up to the developer, the application was submitted before it was annexed.

Discussion on the purpose of cut out between Fiddler Rd. and 441.

Mr. Randy Hawkins from One Oak Development, stated that it's part of the overall master plat. It's a corner clip with underground utilities and will be landscaped/maintained by the property owners association. The area adjacent is a part of Chick Fi-la's leased area.

Discussion on making sure property owner's association maintains cut out location. Ms. Janiszewski stated that it can be platted as a tract or easement to hold them liable.

Ms. Janiszewski clarified this is in addition to the current Chick-fi-la.

On a motion by Ms. Tietmeyer, seconded by Ms. Haukoos, the board voted to approve the application with a 6-0 vote.

B. Request for Site Plan; Freddy's Frozen Custard & Steakburgers; Eudora Road (Location); Eudora Road, LLC (Owner); Eudora Road, LLC (Applicant); Germana Engineering & Associates, Inc. (Engineer); Green Consulting Group, Inc. (Landscape Architect). GMLV Architecture, Inc. (Architect). SP23-08.

Ms. Janiszewski provided a brief summary of the proposed application and stated that staff recommends approval of the above-referenced request, subject to DRC and engineering comments.

The board expressed their concerns regarding the traffic, due to proposed exiting in the front of property instead of rear.

Mr. Sam Medina from Sloan Engineering Group, stated they are connecting to existing cross access easements from the development and the gas station at the corner.

The board reiterated their concerns regarding creating a "bottleneck", in an area that's already congested. Inquired if it's possible for the exit to be northwest, into the parking lot.

Ms. Janiszewski stated that the city's code promotes connectivity and since there are already stub outs on the northern and southern parcels, they are just doing the infills in between.

The board recommended a connection to the Westside.

Discussion on access to abutting property. Ms. Janiszewski clarified that the applicant can't control the property abutting to them, due to no access.

Mr. Medina stated it's been very difficult communicating with adjacent property owner.

Mr. Medina stated that the dumpster would need to be displaced and needs to be behind the building. Overall it would be very challenging.

Conversation on plans for improving Eudora road.

Ms. Janiszewski stated she isn't aware of a transportation capital improvement plan.

Ms. Janiszewski recommended tabling the application for further modifications, regarding transportation and traffic.

Ms. Janiszewski clarified that the private drive is located within Highway 441 and it's not maintained by the city, as it's located in the right-of-way.

Mr. Sumner stated it was intended to be conveyed to Lake County as a public access road. The road was never given to the city, county or D.O.T and is still owned by the shopping plaza (Hobby Lobby). Mr. Sumner clarified that Eudora Rd. is a county road, the city cannot put a stop sign/or light up.

Mr. Hand suggested the applicant provide updated traffic impact study presentation and etc., to staff/board for further review.

Discussion on when the traffic study provided was completed.

Mr. Janiszewski stated that original traffic study was rejected because it was done during the pandemic when everything was closed. The most recent data was collected back in June of 2024.

Discussion on applicant possibly having a conversation with the county, to install a stop sign/improving Eudora Rd.

Ms. Janiszewski stated that the applicant is more than welcome to speak with the county for possible solutions.

Applicant stated that they are more than welcome to have the discussion. Will have traffic consultant get feedback from the county.

DRAFT

On a motion by Ms. Haukoos, seconded by Ms. Tietmeyer, the board voted to table the proposed application, pending a traffic study presentation from the consultant and the applicant providing possible alternative options, regarding the alleviation of possible traffic bottlenecking on Eudora Road; with a 6-0 vote.

VI. Other Business

A. 2025 Meeting Dates

On a motion by Mr. Coombes, seconded by Mr. Dring, the board voted to approve the 2025 meeting dates with a 6-0 vote.

B. Special Meeting: Land Development Code Amendment-January 3, 2025 at 10:00 am

Ms. Tietmeyer stated she currently has an appointment during this time, but will try to get it rescheduled.

On a motion by Mr. Beach, seconded by Ms. Tietmeyer, the board voted to approve the Special Meeting date scheduled for January 3, 2025 at 10:00 a.m.; with a 6-0 vote.

Discussion on who enforces the board's approvals with conditions.

Ms. Janiszewski stated that it is provided in the approval letter and associated with the Site Development Permit.

Ms. Janiszewski stated that's is a case be case scenario. If it's not in compliance, it's a violation of the development order or staff won't sign off on the final inspection, associated with the Site Development Permit.

Discussion on housing developments not adhering to conditions.

Ms. Janiszewski clarified that staff is currently holding the Certificate of Occupancy for one of the property's until in compliance. She will look into anything further that is outstanding.

Discussion on how the Building Department is aware of conditions made by the board/staff.

DRAFT

Ms. Janiszewski stated that Planning and Zoning reviews building permits for single family.

Ms. Janiszewski stated agenda minutes/summaries are usually included in the packets for council's reference. Going forward, she will be sure to highlight any conditions and etc.

Ms. Haukoos stated that this will be here last meeting and thanked the board for her time served.

Board members asked if staff presentations can be sent in agenda packets prior to the meeting.

Discussion regarding Mount Dora Groves North. Ms. Janiszewski stated that they have not yet annexed.

Board member's discussed including additional bookmarks in the packets with staff.

Discussion on whether or not changes to the Land Development Code, address parking lots in town.

Ms. Janiszewski clarified that our code states in the downtown parking exempt district, if a site is developed with parking and redeveloped; they are responsible for providing parking spaces elsewhere. It's currently on the list of things to be removed. The revision is in draft ordinance currently.

Conversation on current cost of tree mitigation. Ms. Janiszewski stated that she is proposing to redo the calculations to establish the fee per caliper inch. There will be further discussion at special meeting on January 3, 2025.

Ms. Janiszewski stated that staff will discuss how much a tree replacement/maintaining for two year will cost.

DRAFT

VII. Announcement of next scheduled meeting date

A. Next regularly scheduled meeting date: January 15, 2025

VIII. Adjournment

On a motion by Ms. Haukoos, seconded by Mr. Coombes, the meeting was adjourned at 10:59a.m.

Miles Beach Commission Chair	Whitney Scott Administrative Coordinator

DRAFT

CITY OF MOUNT DORA

Planning and Development
510 N. Baker St.
Mount Dora, FL 32757
352-735-7113
Fax: 352-735-7191
E-mail: Planning@cityofmountdora.com

DATE: January 15, 2025
Tabled – December 18, 2024

TO: Planning and Zoning Commission

FROM: Development Review Committee
Ryan Winkler, AICP, Senior Planner

RE: **Request for Site Plan**; Freddy's Frozen Custard and Steakburgers (Project Name); 2495 Eudora Road, Mount Dora (Site Address); South of US Highway 441 and west of Eudora Road and (Location); Barbara White, Eudora Road LLC (Owner); Barbara White, Eudora Road LLC (Applicant); Santos "Sam" Medina III, Sloan Engineering Group, Inc. (Engineer); Laura M. Duplain, PLA, Halff (Landscape Architect); Dan Wilson, A.I.A, GLMV Architecture, Inc. (Architect). **Project No. SP23-08**

SUMMARY OF RECOMMENDATION:
Staff recommends approval of the above-referenced request, subject to DRC and engineering comments.

REFERENCES/SUPPORT:
Land Development Code Section 5.1, Site Plan Regulations
Land Development Code Section 6.1, Design Standards

SITE SUMMARY:

Parcel ID:	23-19-26-0004-000-10700
Alternate Key:	3618921
Existing Use:	Vacant
Proposed Use:	Freddy's Frozen Custard and Steakburgers Quick Service Restaurant with Drive-through
Future Land Use:	Commercial
Zoning:	C-3 Highway Commercial
Overlay Zones:	None
Max. Building Height:	65 feet
Proposed Building Height:	23'-9" feet (parapet wall features)
Proposed Building Size:	2,776 square feet
Site Area:	0.83 acres (36,323 square feet)
Maximum ISR:	65%
Proposed ISR:	63.74%
Maximum FAR:	0.35
Proposed FAR:	0.076

Surrounding Property Table:

Direction	City/County	FLU	Zoning	Existing Use(s)
North	City	Commercial	PUD	7-11 Convenience Store and Fuel Pumps
South	City	Commercial	C-3	Tri-Cities Shopping Plaza Access and Parking Lot
East	City	Commercial	C-3	Eudora Road ROW /First National Bank
West	City	Commercial	C-3	Ross Shopping Plaza and Parking Lot

ANALYSIS:

The Applicant proposes to develop a parcel within the Tri-Cities Shopping Plaza for a restaurant and drive-through use. The attached Site Plan shows the proposed layout for the quick service restaurant with a drive-thru facility and outdoor dining patio. The Site Plan includes the proposed drainage, access, parking, solid waste collection, and landscaping improvements. To demonstrate consistency with the City's commercial architectural and site design requirements, colored elevations were provided with selected design elements called-out.

Parking and Loading Spaces

Parking space ratios are based on one space per four (4) seats plus one (1) space for each employee on the largest shift. A total of twenty-six (26) spaces, including two (2) handicap spaces, are proposed on-site. The Code requires a minimum of twenty-six (26) parking spaces provided the proposed development.

Bicycle parking will be provided on-site using the City's standard U-Shaped bike rack. The site plan shows a bike rack to park at least two (2) bikes will be installed to meet the Code minimum.

Access

Ingress/egress includes access to the existing stub-outs from the property to the north and the parking lot from the south to provide cross-access without creating a new connection to Eudora Road. A cross-access easement Additional cross access to the existing shopping center adjacent to the west along with a future connection point to the south. A cross-access easement is recorded in OR BK 0934 PG 1079 for the Tri-Cities shopping plaza.

A new pedestrian access will be created through the installation of a five foot (5') sidewalk connection to the existing sidewalk along Eudora Road.

Drainage

Stormwater management has been designed to be captured onsite with proposed swale stormwater retention system and underground retention chamber below the parking/access aisle.

Water and Sewer

Potable Water and Sewer utilities will be provided by the City of Mount Dora. The proposed development will connect to Wastewater Treatment Plant #1.

Landscaping

A Landscape Plan was provided for the proposed development and provides landscape buffers along property lines, parking lot trees, and additional building perimeter landscaping. The Code requires trees removed for construction shall either be relocated on-site or replanted inch for inch. The Landscape Plan proposes to remove nine (9) trees, and proposes to replant nineteen

(19) canopy trees on-site. No tree-bank contribution is requested.

The site plan review application has been reviewed by the Development Review Committee, and review comments were provided to the Applicant on September 10, 2024. The Applicant has submitted a response to comments demonstrating the site plan and supplemental documents are consistent with the requested information from the Development Review Committee and engineering consultants. Staff recommends approval of the site plan application subject to meeting outstanding DRC and engineering comments.

At the December 18, 2024 PZC public hearing, the Commission moved to table the application request to the next available public hearing for the Applicant to present the Traffic Impact Study and its findings to the board.

STAFF DETERMINATION:
Staff reviewed the application and found it consistent with the City's Land Development Code and Mount Dora Comprehensive Plan 2045.

ATTACHMENTS:
Vicinity Map
Applicant Response to Comments (*dated November 20, 2024*)
Application
Traffic Study
Elevations
Site Plan
Landscaping Plan

VICINITY MAP

Legend

City Limits

Subject Property

N

N.T.S.

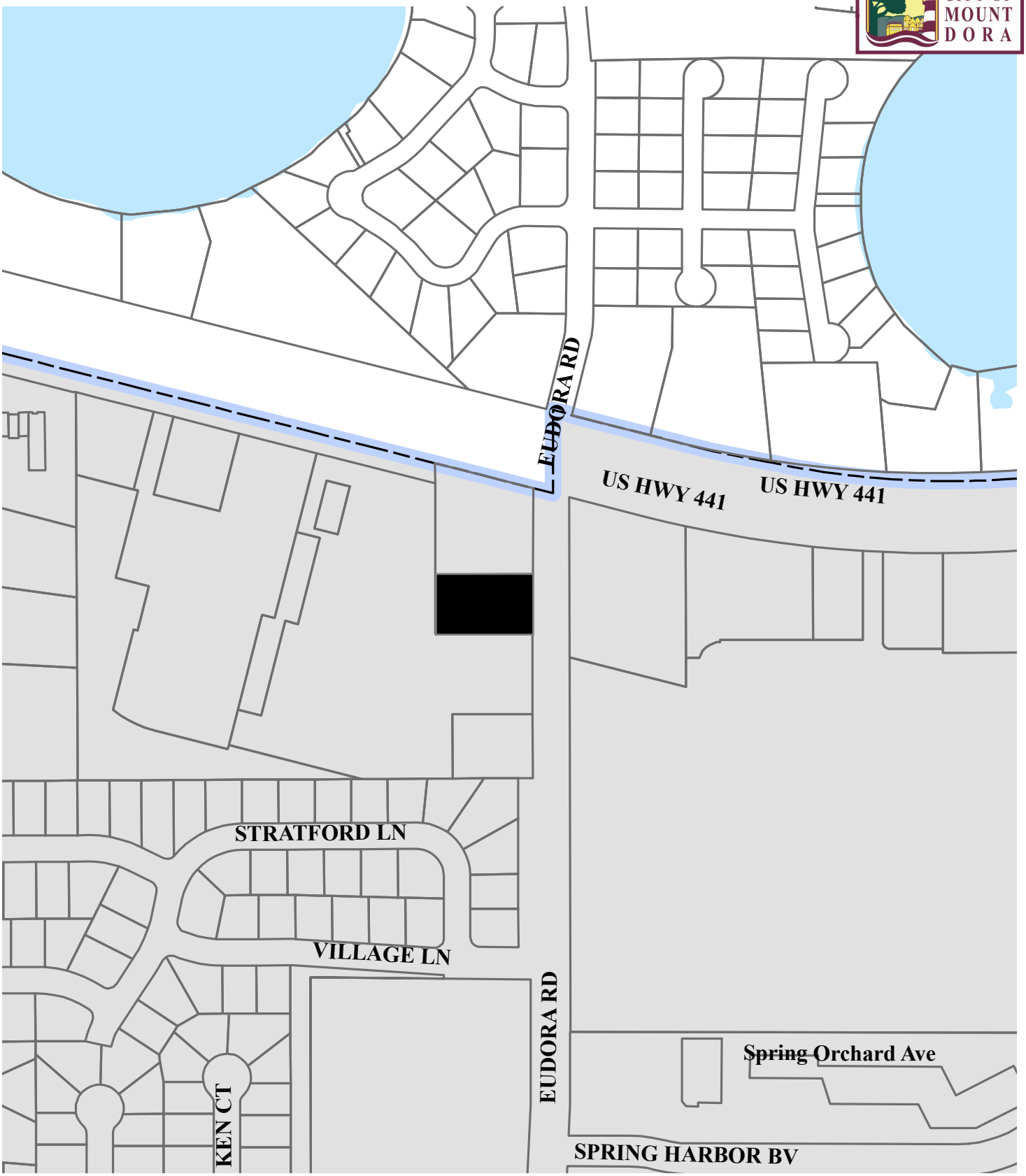

Date: 12/9/2024

Prepared by: Mount Dora Planning and Development Dept * 510 N. Baker Street, Mount Dora, FL 32757 * 352-735-7112

SLOAN Engineering Group

P.O. Box 253, Bartow, Florida 33831
Office: (863) 800-3046
Fax: (863) 800-1159

November 20, 2024

City of Mount Dora
Planning and Development
510 N Baker Street
Mount Dora, Florida 32757

RE: Freddy's Frozen Custard and Steakburgers
Site Plan SP23-08
SEG Project 2575-1

To whom it may concern,

This is in response to your request for additional information

Reviewed by: Landscaping Review - Planning and Zoning
Comments provided by Michele Janiszewski, janiszewskim@mountdora.gov

Comment 1: Plan Sheet LM100 indicates that 23 replacement trees will be mitigated on site and refers to Plan Sheet LP502; Plan Sheet LP502 was no included with the landscaping plans. Please revise the Landscape Plan to depict where the removed trees will be mitigated.

Response 1: Updated reference on plan sheet LM100 to LP501 for mitigated replacement trees. Landscape plan (LP100) has been updated and depicts replacement tree locations for mitigation.

Comment 2: LDC Section 6.6.3 (7) requires landscape breaks in parking lots shall be a minimum of ten feet by 20 feet. The site plan shows 9' x 20' landscape islands; revise accordingly.

Response 2: All landscape islands now meet the 10' x 20' minimum dimensions. See the revised Site Plan, sheet C300.

Comment 3: Pursuant to LDC Section 6.6.7 (1) (f), in cases where there are no opportunities to replace tree inches on site for tree inches proposed for removal, the owner may make a tree bank contribution in the amount equal to the retail price of a canopy type specimen tree for the remaining tree replacement inches. Tree bank contributions shall be used for the purpose of planting trees throughout the city at the sole discretion of the city. Replacement retail cost shall be based on a Live Oak (Quercus Virginiana) sized minimum three and one-half inches, eight to ten feet in height, and Florida Number one grade or better. Payment of tree bank funds must be made prior to issuance of arbor permit (when required), site development permit or as authorized by the city, or as specified by the city. The City has accepted $450 as an acceptable amount for a live oak meeting the code requirements provided above.

Response 3: Landscape plan (LP100) has been updated and depicts replacement tree locations for mitigation.

Comment 4: Ensure the city's tree protection standards are followed for the trees along the boundaries which may be adversely impacted when the site is developed.

Response 4: **Per coordination with City staff and Halff, the appropriate tree protection is now being provided. Refer to the Tree Protection Site/Grading Plan, sheet C402, which shows the limits of tree protection over the proposed improvements. As coordinated with Halff, at the time of Site Development Permit, a certified arborist report will be provided to verify the condition of trees proposed for removal.**

Comment 5: Update the irrigation plan to include the area which will be irrigated.
Response 5: **Irrigation plans have been updated to include all areas that will be irrigated.**

Comment 6: Update the irrigation plans to be compliant with Mount Dora in lieu of Lake County.
Response 6: **Irrigation plans have been updated to be compliant with City of Mount Dora.**

Comment 7: LDC Section 6.13.3 (11) (b), outparcels that are adjacent to each other shall have vehicular connection between their respective parking lots and interconnected pedestrian walkways. Ensure the site plan complies with this requirement.
Response 7: **As coordinated with City staff, this is the last outparcel and there are no opportunities to connect pedestrian walkways adjacent to the project as they have not been provided throughout the other outparcels.**

Reviewed by: Architectural Design - Planning and Zoning
Comments provided by Michele Janiszewski, janiszewskim@mountdora.gov

Comment 1: LDC Section 6.13.3 (1)(b)(3), requires buildings less than 5,000 square feet in size to have the facades facing a public street to have either windows comprising a minimum of 25 percent of the affected façade; or a projected covered public entry with a minimum of 20 percent of the wall space devoted to windows. Revise the elevations to ensure the western elevation is compliant with this provision.
Response 1: **As coordinated with City staff, the western elevation faces an internal private drive aisle, and this criterion is not required. The eastern elevation meets this criterion. See sheet CP-300 which shows the eastern elevation with 27.1%.**

Comment 2: LDC Section 6.3.13 (1)(i)(1), requires all commercial buildings to have a minimum of four of the following building design treatments: a. Canopies or porticos, integrated with the buildings massing and style; b. Overhangs, minimum of three feet; c. Arcades, minimum of eight feet for buildings of 20,000 square feet of gross building area or more, and six feet for all other buildings, clear in width; d. Sculptured artwork; e. Raised cornice or building banding with a minimum of two reliefs; f. Peaked roof forms; g. Arches; h. Ornamental and structural architectural details, other than cornices; which are integrated into the building structure and overall design; i. Clock bell towers or other such roof treatment (e.g. dormers, belvederes, cupolas); j. Emphasized building base, minimum of three feet high and minimum projection from the wall of two inches; k. Additional roof articulation above the minimum standards, (see Section 6.13.3.2); l. or Metal or tile roof as the dominant roof material. Please indicate which elements are represented on the elevations.
Response 2: **Sheet CP-300 has been revised to list out the design elements being provided which are in conformance with LDC Section 6.3.13 (1)(i)(1).**

Comment 3: LDC Section 6.3.13 (1)(i)(2), requires all commercial sites to have at least one of the following site design elements: a. Decorative landscape planters or planting areas, a minimum of five feet wide, and areas for shaded seating consisting of a minimum of 100 square feet; b. Integration of specialty pavers, or stamped concrete along the building's walkway. Said treatment shall constitute a minimum of 60 percent of walkway area; c. Water element(s), a minimum of 150 square feet in area; or d. Two accent or specimen trees (in addition to the minimum required landscaping) along the front facade with a minimum diameter of four inches measured four feet above the ground and a minimum height of 18 feet at planting.

Response 3: The Site Plan, sheet C300, has been revised to provide for stamped concrete over a minimum of 60% of the buildings' walkway area. A stamped concrete location detail and area calculations have been included on the revised Site plan.

Comment 4: LDC Section 6.3.13 (2)(c)(1), requires parapets to be used to conceal roof top equipment and flat roofs. Ensure any roof top equipment is screened.

Response 4: All roof top equipment is to be screened. Sheet CP-300 has been revised to show the locations of roof top equipment in hidden lines showing it will be behind the parapet.

Comment 5: LDC Section 6.13.3 (6) requires service function areas, including but not limited to loading, storage, mechanical equipment, and solid waste disposal, to be fully screened from adjacent properties and road way corridors at ground and pedestrian level. Screening material and design shall be consistent with design treatment of the primary facades of the commercial building or project and the landscape plan. Ensure this requirement it met.

Response 5: These requirements are being met at the dumpster enclosure which proposes materials to match the building. Also, the back of house of the building, access gates have been added to provide further screening. Refer to the Site Plan, sheet C300, and the Trash Enclosure Details, sheet C701.

Comment 6: LDC Section 6.3.13 (8) requires that pedestrian ways, linkages and paths must be provided from the building entry(s) to surrounding streets, external sidewalks, and outparcels. Pedestrian ways shall be designed to provide access between parking areas and the building entrance(s) in a coordinated and safe manner. Pedestrian walkways shall be a minimum of five feet wide; must be consistent with the provisions of the Americans with Disabilities Act (ADA), the Accessibility Guidelines and the Florida Accessibility Code; and materials may include specialty pavers, concrete, colored concrete or stamped pattern concrete.

Response 6: As mentioned above, this is the last outparcel and there are no opportunities to connect pedestrian walkways adjacent to the project as they have not been provided throughout the other outparcels. An ADA accessible route is being provided from the building directly out to the existing sidewalk on Eudora Road. Refer to the Site Plan, sheet C300.

<u>Reviewed by: Building Services – Fire Review</u>

Comments provided by John Abner, abnerj@cityofmountdora.com

Comment: Provide a plan sheet demonstrating that the site can accommodate Mount Dora Fire Trucks; the specifications are enclosed for your use and reference (MJ).

Response: **Truck Turning Analysis plans have been provided on sheets C301 and C302 for both fire truck specifications.**

<u>Reviewed by: Andrew Marsian, Utilities & Plant Operations Director</u>

Comment 1: Sheet C100-Under the Utility Service Providers, "Water" shows the City of Eustis as the provider. Revise as per the below:
City of Mount Dora. Joshua Kramm 900 North Donnelly Street
Mount Dora, Florida 32757 (352) 735-7151

Response 1: **This has been revised as requested. See revised sheet C100.**

Comment 2: Sheet C100 – Under the Utility Service Providers, "Wastewater" shows Paul Lahr, P.E. as the contact. Revise as per the below:
City of Mount Dora. Joshua Kramm 900 North Donnelly Street
Mount Dora, Florida 32757 (352) 735-7151

Response 2: **This has been revised as requested. See revised sheet C100.**

Comment 3: Sheet C100 – Under the Utility Service Providers, one of the listed communication contacts shows the City of Mount Dora with George Marek as the contact. The City of Mount Dora does not supply fiber or other communication services. Revise.

Response 3: **The providers have been revised accordingly. See revised sheet C100.**

Comment 4: Sheet C500 – "Enlarged View of Meter & Backflow Area", incorrectly shows the City of Eustis Water Department in two (2) locations. Revise drawing to indicate the City of Mount Dora.

Response 4: **This has been revised as requested. See revised sheet C500.**

Comment 5: Sheet C500- "Enlarged View of Meter & Backflow Area", shows a 1.5" Service feeding a 1" and a 1.5" meter. The service line needs to be larger than the sum of the meters. Revise drawing accordingly.

Response 5: **The service line feeding the meters has been revised to 3". See revised sheet C500.**

Comment 6: Sheet C500- There are force mains running along the front of the property. Include the force mains and show any possible conflicts. Conflicts to include the City of Mount Dora and the 4" private line owned by Target.

Response 6: **The force main fronting the property, as well as the 4" force main coming from Target have been shown on the plans. Please note that the Target force main crosses Eudora Road south of our proposed project utility connections. See revised sheet C500.**

Comment 7: Sheet C500- The sanitary sewer line that is shown is connected to a private system. Confirm whether prior approval was received prior to the design.

Response 7: **The property owner's attorney has reviewed the existing easement agreements and per the Agreement of Restrictions and Cross-Easements, recorded in OR Bk 934 Pg 1074, the Shopping Center owner originally contemplated the extension of the sewer line to serve the subject site. See below excerpt…**

7. Shopping Center covenants and agrees that, upon development of its abutting property, it will simultaneously, at Shopping Center's expense, install, or cause to be installed, a sanitary sewer line to the property line of property described on Exhibit "A", and that it shall, when development commences, grant to appropriate governmental authorities, or to Corner, utility easements in keeping with sound engineering practices, to enable Corner to have access to said sewer line. Any hook-up charges or meter costs or costs of extension for connection to the line installed, or caused to be installed, shall be at the sole cost and expense of Corner.

A copy of this recorded agreement has been included with this response and it gives the project the ability to connect to the existing stubbed out sewer line.

Reviewed by: Planning and Zoning
Comments provided by Michele Janiszewski, janiszewskim@cityofmountdora.com

Comment 1: Once approved, the property will need to apply for a site development permit through Building Services prior to commencing development on the property. The site development permit will include the permitting and inspection of the landscaping, parking, stormwater management systems, site lighting, and other site improvements. The approved site plan will supplement the application for site development permit. Building permits for the building(s) and other development may not be issued until the site development permit is issued and no building(s) will be granted a certificate of occupancy until the site development permit is closed out.

Response 1: Acknowledged.

Comment 2: Please be advised, Light pole footers may not be exposed more than six inches above finish grade.

Response 2: Acknowledged. A note has been added to the Lighting Plan, sheet C501, specifying this requirement.

Reviewed by: Building Services – Flood Review
Comments provided by Ryan Morgan, morganr@cityofmountdora.com

Comment: Property is located within Floodzone X which is an area outside of the Special Flood Hazard Area (MJ).

Response: Acknowledged

Reviewed by: Electric Utility
Comments provided by Steve Langley, langleys@cityofmountdora.com

Comment: Subject property does not appear to be within the City of Mount Dora's service area for electricity. Progress Energy will be the electric provider (MJ).

Response: Acknowledged.

Reviewed by: Allen C Lane, P.E., CPH, LLC
Cover Sheet:

Comment 1: Callout the parcel number and site address on the cover sheet.

Response 1: **The parcel number and site address has now been added to the Cover Sheet. See revised sheet C100.**

Comment 2: The Utility Service providers calls out the City of Eustis Water Dept for potable water. The SJRWMD website shows that the site is located in the vicinity of a CUP belonging to the City of Mount Dora. Verify the relevant utility provider and revise the contact information as necessary. Water and sewer shall be from the City of Mount Dora.

Response 2: **The Utility Providers have been updated to correctly show Water/Wastewater being provided by the City of Mount Dora. See revised sheet C100.**

Sheet C101:

Comment 3: Change all general city/county references to the City of Mt. Dora.

Response 3: **These have been revised accordingly. See revised sheet C101.**

Comment 4: Revise the As-Built/Record Drawing note to specify the City of Mt. Dora rather than local government. Please add a note added indicating the As-builts need to be sent to the city of Mt. Dora for their approval in addition to the Engineer.

Response 4: **These notes have been revised/added as requested. See revised sheet C101.**

Comment 5: Revise the As-Built/Record Drawing note to specify the as-builts will be signed by a Florida licensed surveyor.

Response 5: **These notes have been revised as requested. See revised sheet C101.**

Comment 6: Note 2 in the Utility section of the As-Builts needs to be modified to include pipe length and inverts for the gravity mains with the other mentioned requirements.

Response 6: **This note has been revised as requested. See revised sheet C101.**

Comment 7: Note 6 in Utility section of the As-Builts needs to be modified to specify that the conflict crossings need to be shown on the as-builts.

Response 7: **This note has been revised as requested. See revised sheet C101.**

Comment 8: Drainage And Grading note 1 in the As-builts section needs to include grate elevation, weir invert, and top of weir elevation.

Response 8: **This note has been revised as requested. See revised sheet C101.**

Comment 9: Drainage and Grading note 4 - revise to reference the project and include sufficient spot elevations on all four corners of the ADA spaces to confirm the slopes. Also, the note on the plans references a residential development.

Response 9: **This note has been revised as requested. See revised sheet C101.**

Comment 10: Backfill and Compaction notes - need to have a specification reference to "T-99" and "T-180". These appear to be AASHTO references. Please verify on the plans.

Response 10: **The AASHTO reference has been incorporated into Note 8 of the Backfill and Compaction Notes. See revised sheet C101.**

Comment 11: Storm Pollution Protection note 12 - needs to have a sentence stating the site will need a tree removal permit from the city prior to any tree removal.

Response 11: **This note has been revised as requested. See revised sheet C101.**

Comment 12: Storm Pollution note 13 - needs to be revised to state "No burning is allowed on site"
Response 12: This note has been revised as requested. See revised sheet C101.

Comment 13: Storm Pollution note 17 - references discharging dewatering into a settling area inside the nearest stormwater pond. This note needs to be revised to identify a location on site for dewatering discharge (there are no surface storm water ponds onsite).
Response 13: A dewatering settling area has been identified on sheet C200 at the location to receive discharge from the underground exfiltration system. Note 17 has been revised accordingly. See revised sheet C101.

Comment 14: Sequence of Activities Note 3 - needs to specify that the third task completed will be rough grading of the pond. There is no proposed pond. Revise this note to be specific to the site's underground exfiltration system.
Response 14: This note has been revised as requested. See revised sheet C101.

Comment 15: Sequence of Activities Note 5 - note specifies the storm sewer conveyance system will be installed fifth with utilities and buildings. Since the site's drainage system requires the storm sewer to carry drainage to the underground exfiltration system, we expect the storm sewer will need to be installed along with the underground exfiltration system. Revise the notes as necessary.
Response 15: This note has been revised as requested. See revised sheet C101.

Comment 16: Backfill, Compaction, and Inspection note 11 - needs revised to specify that the City of Mount Dora may determine if more compaction tests are required.
Response 16: This note has been revised as requested. See revised sheet C101.

Comment 17: Backfill, Compaction, and Inspection note 12 - needs to specify that the video will need to go to both the City of Mount Dora and the Engineer of Record.
Response 17: This note has been revised as requested. See revised sheet C101.

Comment 18: Stormwater Pollution Prevention note 15 - needs to specify Ponds and Basin Control will be constructed first. This note needs to be revised to reflect this projects' underground exfiltration system.
Response 18: This note has been revised as requested. See revised sheet C101.

Comment 19: Maintenance Plan note 4 - may be removed since there is no pond being proposed in this project.
Response 19: This note has been removed and these notes have been renumbered. See revised sheet C101.

Comment 20: Paving Operation note 3 - needs to specify that the tests/designs/deviations need to be sent to both the Engineer and the City of Mount Dora.
Response 20: This note has been revised as requested. See revised sheet C101.

Comment 21: The General Site Notes repeat some numbering. Please renumber the General Site Notes.
Response 21: These notes have been renumbered accordingly. See revised sheet C101.

Comment 22: General Site Notes - note 2 needs to specify that the City of Mount Dora and the Engineer need to be notified of any deviations from the civil plans.

Response 22: This note has been revised as requested. See revised sheet C101.

Comment 23: General Notes - note 36 – this note references the home owners association. Is this applicable?

Response 23: This note has been corrected to identify the Property Owner as the maintenance entity. See revised sheet C101.

Comment 24: General Site Notes - note 8 needs to also specify crosswalks.

Response 24: This note has been revised as requested. See revised sheet C101. Note that the appropriate crosswalks/handicap ramps are to be as shown on the Site Plan, C300.

Comment 25: General Site Notes - note 12 may be removed as there is no wet pond proposed.

Response 25: This note has been removed and these notes have been renumbered. See revised sheet C101.

Comment 26: General Site Notes - note 16 needs to be modified to specify that both the City of Mount Dora and relevant law enforcement agency need to be contacted and given at least two business days of notice for road or lane closures.

Response 26: This note has been revised as requested and is now Note #15. See revised sheet C101.

Comment 27: Land Development Standards - note 2 needs to be revised to include that the City of Mount Dora is the entity that may grant variances from the plans and specifications. Also, the initials "AJH" are out of order. Shouldn't this be AHJ?

Response 27: AHJ references have been replaced with City of Mount Dora. See revised sheet C101.

Comment 28: Land Development Standards - note 4 needs to be modified to reference the City of Mount Dora's Planning and Development Division.

Response 28: This note has been revised as requested. See revised sheet C101.

Comment 29: Land Development Standards - note 5 needs to be revised to state "…drawings shall be submitted to the EOR for review and approval. Once reviewed, EOR is to submit record drawings to the City for final review and approval."

Response 29: This note has been revised as requested. See revised sheet C101.

Comment 30: Land Development Standards - note 6 needs to be revised to state that "all MOT plans are to be submitted to the city for review and approval."

Response 30: This note has been revised as requested. See revised sheet C101.

Comment 31: General Potable Water and Sanitary Sewer Note – note 1 needs to be revised to mention sunshine 811 rather than sunshine one and to call two full business days in advance.

Response 31: This note has been revised as requested. See revised sheet C101.

Comment 32: General Potable Water and Sanitary Sewer Note – note 6 needs to be revised to include all valve, service, and bend locations. Add a note stating record drawings shall be sent to the city of Mount Dora for Review.

Response 32: This note has been revised as requested. See revised sheet C101.

Comment 33: General Potable Water and Sanitary Sewer Note - note 14 needs to be revised to specify that shop drawings must be provided to the city of Mount Dora for all utilities connecting to offsite utilities owned by the City of Mount Dora.

Response 33: This note has been revised as requested. See revised sheet C101.

Sheet C200:

Comment 34: The Silt Fence Callout on the Western side of the site and the Tree Barrier callout on the Northern side point to the same line. Revise as necessary so that they point to different lines. One leader in the northwest corner is not pointing to either line.

Response 34: These line leaders have been revised accordingly. See revised sheet C200.

Comment 35: The Port-o-Lets, Double Wall Fuel Tank, Washdown Site, Construction Dumpster, and Construction Entrance refer to the wrong note numbers. Revise as necessary.

Response 35: These note number references have been removed and replaced with a note to reference the Stormwater Pollution Prevention Notes. See revised sheet C200.

Comment 36: According to the legend found on sheet C101, the linework above the silt fence on the North side of the site is a fence. The tree barrier callout contradicts the legend. Please clarify and revise as necessary.

Response 36: The legend on sheet C101 has been revised to match the Tree Protection line type used throughout the plans.

Sheet C300:

Comment 37: Is there adequate space provided for vehicles when the drive through gets backed up, people parked for dine-in are leaving, and cars looking for parking are circling the building in the By-pass Lane, specifically at the intersection directly to the Northeast of the restaurant? It currently appears as if the Drive Through will block the cars parked directly North of the building. Is this the typical layout for the restaurant?

Response 37: This is a typical layout for drive through restaurants. The owner has developed multiple Freddy's locations and at the grand opening is the only time where they typically see parking at capacity. Once the site opens and patrons become familiar with the traffic/parking pattern, the Owner does not anticipate issues with traffic backup.

Comment 38: It does not appear that there will be enough space for vehicles to drive through the By-pass Lane when the Dumpster Enclosure is open. Please verify and revise as necessary so that the Bypass Lane may remain operational at all times.

Response 38: The dumpster has been shifted west so that there is a 12' minimum width when the dumpster enclosure gates are open. See revised Site Plan, sheet C300.

Comment 39: What is Trench Curb? Is this a vertical curb that is 6 inches above pavement?

Response 39: Yes, this is a vertical curb that is 6" above pavement. The curb details are provided on the Site Details sheet, sheet C700.

Sheet C400:

Comment 40: Drainage Structure S-103 has an invert in of 98.20 and an invert out of 98.10. The sump invert is higher than the pipes. Revise as necessary.

Response 40: The sump invert has been corrected so that it is 1' lower than the lowest pipe invert. See revised sheet C400.

Comment 41: The isometric view of the parking area and outfall structure is shown. The top of the gravity wall is the same elevation as the structure top. What is the elevation in the corner of the parking lot? We do not see pavement elevations in this area.

Response 41: The top of the gravity wall is higher than the top of structure CS-100. The isometric detail has been revised to add spot elevations for the top of wall and edge of pavement. Also, clearer limits of the gravity wall have been added on sheet C401.

Comment 42: Revise section A-A so that the skimmer is raised to be above the top elevation of the weir.

Response 42: This has been revised as requested. See revised sheet C400.

Comment 43: Add the control structure number to the detail (CS-100).

Response 43: This has been revised as requested. See revised sheet C400.

Sheet C401:

Comment 44: Provide Grate elevations for each inlet on the plan. Some inlets have elevations, some do not.

Response 44: This has been revised as requested. See revised sheet C401.

Comment 45: Provide the Grate elevation for the Control structure.

Response 45: A spot elevation has been added for manhole lid on the Control Structure. See sheet revised C401.

Comment 46: Show the Rip Rap at the bottom of the outfall structure as shown on sheet C400.

Response 46: This has been revised as requested. See revised sheet C401.

Comment 47: The slopes on the ADA spaces are exactly 2.0%. Recommend flattening the slopes slightly to allow for margin of error in grading and paving.

Response 47: The ADA spaces are to be concrete to allow the Contractor to have more precise slope construction. The grading has been revised to be a 1% minimum. See revised sheet C401.

Comment 48: Please provide spot elevations at the bottom of the concrete flume

Response 48: Spot elevations have been added as requested. See revised sheet C401.

Comment 49: This sheet is not to the same scale as the rest of the plans. Verify the scale and bar scale.

Response 49: The scale has been corrected on this sheet. See revised sheet C401.

Sheet C500:

Comment 50: The detail in the bottom right calls out the City of Mt. Dora and Eustis we understand all existing utilities are owned by the City of Mount Dora. Please verify and revise as necessary.

Response 50: These notes have been corrected. See revised sheet C500.

Comment 51: Add a note on this sheet to refer to sheet C101 for the general potable water and sanitary sewer notes.

Response 51: This note has been added as requested. See revised sheet C500.

Comment 52: Do they make 12"x1.5" tapping sleeves? May need to upsize to 2".

Response 52: Per other comments from City staff, the tapping saddle and service line upstream of the meters has been revised to 3". See revised sheet C500.

Comment 53: The valve after the branch towards the irrigation meter is redundant and may be removed.

Response 53: This valve has been removed as requested. See revised sheet C500.

Comment 54: There is negative slope between cleanout 6 and the grease traps invert in. Revise as necessary.

Response 54: The invert in at the grease trap has been corrected to provide a positive slope. See revised sheet C500.

Comment 55: We checked the slope of the gravity main. Several of the slope callouts around the Grease Trap did not match the lengths and inverts given. Revise the slopes of the gravity main as necessary.

Response 55: The lengths/slopes for the sanitary lines have been revised/corrected accordingly. See revised sheet C500.

Comment 56: The invert out of the grease trap is 100.99, then two feet of pipe is called out at 1.00% slope leading into cleanout 5, which has an invert of 99.53. That would create a 1.46 ft drop between the Grease Trap and cleanout 5 over the span of 2 feet, creating a slope of 73% Revise the invert of cleanout 5 as that is a very large drop over two feet.

Response 56: The inverts/slopes exiting the grease trap have been revised to avoid excessive slope. See revised sheet C500.

Comment 57: Is there an existing cleanout where the proposed sanitary sewer is connecting to the existing system? The proposed sanitary service should connect to an existing cleanout or manhole if possible.

Response 57: There is no cleanout at the existing stubout. A new cleanout is being proposed at the point of connection. See revised sheet C500.

Comment 58: Add a note specifying whether or not the proposed utilities will be privately maintained.

Response 58: The utilities are to be privately maintained. A note has been added on revised sheet C500.

Sheet C501:

Comment 59: Remove the meter and backflow note and outline from the photometric plan.

Response 59: This has been removed as requested. See revised sheet C501.

Comment 60: The north half of the parking lot is darker than the south. Should there be a light on the north side?

Response 60: Two additional lights have been added on the north side to accommodate this. See revised sheet C501.

Sheet C600:

Comment 61: The orange rectangle can be removed from the plan.

Response 61: This has been removed as requested. See revised sheet C600.

Comment 62: Callout the filter fabric that will be used to wrap the 42-inch corrugated pipe in sections A and F (not called out on sheet C702).

Response 62: The filter fabric has been added/called out on sections A and F. See revised sheet C600.

Comment 63: Section B – Revise the Light Duty Pavement call out for the ADA parking stalls on the left side of the section to callout the concrete handicapped parking.

Response 63: This section has been revised as requested. See revised sheet C600.

Comment 64: Section B – The 20-foot wide concrete pavement slope is shown as 1.0%. The spot elevations on the Grading Plan show a 2.0% slope. Please verify the slope. See our note above referencing the overall design slope.

Response 64: This slope on the grading plan has been revised to be 1% which now matches section B.

Comment 65: Section E calls out "Parking Stalls - Light Duty Pavement.' This is in the drive isle. Should the be called out as "Drive-Aisle Heavy Duty Pavement," according to the site plan. Revise as necessary.

Response 65: The note in this section has been corrected. See revised sheet C600.

Sheet C700:

Comment 66: Is the Standard Duty Asphalt Pavement Detail supposed to represent the Light-Duty Pavement for Parking Stalls?

Response 66: All Light-Duty references have been replaced with Standard Duty which matches the Standard Duty Asphalt Pavement Detail.

Comment 67: Is the heavy-duty concrete 6-inches or 7-inches thick? The site plan indicates 6-inches and note 1 of the detail indicates 7-inches.

Response 67: It is 7". The site plan note has been corrected to match the detail.

Comment 68: The ADA detail calls out a 5 foot and 8 foot accessible area. The site plan only has a 5 foot wide area. the accessible sign detail includes the "van accessible" sign which requires 8 feet for van accessible area. Revise site plan for the 8 foot wide van accessible area.

Response 68: This detail has been revised to provide a 5' accessible area which matches the site plan. See revised sheet C700.

Comment 69: Include a detail for the handicap ramps.
Response 69: Details for the specified ramps have been added. See revised sheet C700.

Comment 70: The concrete wheel stop is called out as 7 inches tall on the detail. This seems tall for standard car parking. Please verify.
Response 70: The wheel stop height has been revisded to 7" height. See revised sheet C700.

Sheet C701
Comment 71: Drafting Comment – The Enlarged Trash Enclosure Plan detail is well above the title for the detail. Revise to that the detail is directly above the title.
Response 71: This has been revised as requested. See revised sheet C701.

Comment 72: Callout the dumpster within the dumpster enclosure detail.
Response 72: Additional labeling has been provided for the dumpsters within the enclosure. See revised sheet C701.

Drainage Report Comments:
Comment 73: Provide a Pre-Basin Map in the Drainage Report
Response 73: A Pre-Development Basin Map has been included, Map H, within the Drainage Report. The limits of the basin match the area being conveyed to the underground exfiltration system. Perimeter areas not draining to the system are designed to be diverted.

Comment 74: Section 1.2 of the Drainage Report states that the site is not a part of Flood Zone X, while Sheet C200 of the Construction plans state that the site is a part of Flood Zone X. Please clarify and revise as necessary.
Response 74: This verbiage has been revised to clarify that the project is located outside of the 100 year flood zone and is within Zone X.

Comment 75: Call out the Underground Exfiltration System in the Reduced Site Plan on page 36 of the Drainage Report.
Response 75: The Reduced Site Plan, Map C, has been revised to callout the underground exfiltration system.

Comment 76: Specify the post development peak discharge rate in the narrative of the Drainage Report.
Response 76: The pre and post development peak discharge rates are listed in section 1.6.2.1 for all of the design storm events.

Comment 77: Include a brief description of the porosity and type of stone used to backfill the Corrugated Pipes.
Response 77: A brief description has been added as Section 1.6.3 in the report.

Comment 78: Page 5 of the drainage report specifies the tailwater elevation to be 100.80. The site discharges into a depression with a top elevation of 101.00. Shouldn't the tail water elevation be 101.00, not 101.80?
Response 78: The tailwater narrative/calculations have been revised as requested to utilize elevation 101.00. See revised report.

Comment 79: The minimum weir elevation is called out in the stage storage table on page 21 of the drainage report and is 99.50. The minimum weir elevation was then used in the recovery calcs; however, the plans call out the weir invert to be 101.00, and page 30 of the drainage report calls out a weir elevation of 101.00. The weir elevation called out in the Contech Page should match the overall structure weir elevation.

Response 79: The minimum weir elevation called out on the previous stage storage table on page 21 reflects the minimum weir elevation required to achieve/retain the required water quality treatment volume. Since the 99.50 elevation does not allow for a practical discharge to the tailwater elevation (101.00), the weir elevation was raised to 101.00. Stage storage table has been revised to show the proposed constructed weir elevation of 101.00.

Comment 80: The recovery table on page 23 shows water at elevation 99.5 drawing down to 98.00 rather than the weir elevation of 101'. The recovery table does not currently show the recovery from 24 hour 25 year storm event, which would reach an elevation of 100.3 The recovery for all applicable storm events needs to be shown in the Recovery table on page 23.

Response 80: The recovery has been revised to begin the drawdown at elevation 101.00. This drawdown occurs at hour 6.01. Since the design high elevation of the 25yr24hr storm event is lower than the weir elevation of 101.00, an additional recovery analysis is only provided for the 100yr24hr design high elevation.

Comment 81: The Horizontal and Vertical conductivity found on pages 24 and 30 do not match the conductivities given in the narrative nor the Geotech report. Revise as necessary so that the Geotech report is reflected in the model.

Response 81: The horizontal and vertical conductivities listed in the geotech report and narrative are 60 and 40 ft/day, respectively. Per Section 1.5.3 of the report, a factor of safety of 2 was used in the calculations resulting in the values of 30 and 20 ft/day that are seen on pages 24 and 30.

Comment 82: The weir elevation for CS-100 on page 30 of the drainage report does not match the weir elevation used in the recovery calcs. Revise for consistency.

Response 82: The recovery calculations now use the weir elevation of 101.00.

Comment 83: Porosity is called out to be 0.4 (40%) on page 21, 0.3 (30%) on page 24, and 0.3 (30%) on page 30. Revise accordingly so that the porosity is consistent within the report and with the typical section of the Contech system in the Construction Plans.

Response 83: The porosity of 0.4 (40%) on page 21 is in reference to the backfill material being used in the underground exfiltration system and is correct. The 0.3 (30%) referenced on pages 24 and 30 is in reference to the underlying soils that the system is percolating into and is referenced from the Storage Coefficient listed in the geotech report and shown in section 1.5.3 in the Drainage Report. These are (2) separate values and are both correct.

Comment 84: The water quality calculations starting on page 27 reflect a warning stage of 100.80. The weir elevation of the control structure is 101.00. The top of pipe for the underground system is 101.50, shouldn't the warning stage be 101.50?

Response 84: The post node warning stage reflects the tailwater elevation. The warning stage for the Underground Exfiltration System (Node 100) has been revised to be 101.50, the top of the pipe.

If you have any questions regarding this response, please call our office at (863) 800-3046 or email me at smedina@sloaneg.com.

Sincerely,

SLOAN ENGINEERING GROUP

Santos Medina III, P.E.
Vice-President

CITY OF MOUNT DORA
PLANNING AND DEVELOPMENT

Office Use Only:
Project # SP-
23-08

City of Mount Dora
Planning & Development
510 N. Baker St.
Mount Dora, FL 32757
352-735-7112
PlanDev@CityofMountDora.com

SITE PLAN APPLICATION

Date: 8.1.23 Project Name: FREDDY'S FROZEN CUSTARD AND STEAKBURGERS-MT. DORA

RECEIVED AUG 11 2023

1. Site Address: UNASSIGNED; EUDORA ROAD ALT KEY #3618921
   (Contact City Staff for New Address Assignments)

2. Applicant's Name: BARBARA WHITE
   Company's Name: EUDORA ROAD, LLC
   Address: 32750 LAKESHORE DRIVE
   City, State & Zip: TAVARES, FL 32778
   Phone: 631-944-2126 E-mail: BWHITE@FLCUSTARD.COM

3. Property Owner's Name(s): BARBARA WHITE
   Company's Name: EUDORA ROAD, LLC
   Address: 32750 LAKESHORE DRIVE
   City, State & Zip: TAVARES, FL 32778
   Phone: 631-944-2126 E-mail: BWHITE@FLCUSTARD.COM

4. Engineer's Name: ~~CHRISTOPHER GERMANA, P.E.~~ Santos "Sam" Medina III
   Company's Name: ~~GERMANA ENGINEERING AND ASSOCIATES, INC.~~ Sloan Engineering Group, Inc.
   Address: ~~1120 W. MINNEOLA AVENUE~~ P.O. Box 253
   City, State & Zip: ~~CLERMONT, FL 34711~~ Bartow, Florida 33831
   Phone: ~~352-516-4888~~ 863-800-3046 E-mail: ~~CGERMANA@GERMANAENGINEERING.COM~~ smedina@sloaneg.com

5. Landscape Architect's Name: ~~TIMOTHY GREEN, R.L.A.~~ Laura M. Duplain, PLA
   Company's Name: ~~GREEN CONSULTING GROUP, INC.~~ Halff
   Address: ~~4070 UNITED AVENUE~~ 1000 N Ashley Drive, Suite 900
   City, State & Zip: ~~MT. DORA, FL 32757~~ Tampa, Florida 33602
   Phone: ~~352-357-3241~~ 813-620-4500 E-mail: lduplain@halff.com

6. Architect's Name: DAN WILSON, A.I.A.
   Company's Name: GLMV ARCHITECTURE, INC.
   Address: 1525 E DOUGLAS AVENUE
   City, State & Zip: WICHITA, KS 67211
   Phone: 316-265-9367 E-mail: dan.wilson@glmv.com

7. Briefly describe the property project and proposed use(s): PROPOSED RESTAURANT WITH ASSOCIATED STORMWATER, UTILITY, AND LANDSCAPING

8. Property is located on the following adjacent streets: EUDORA ROAD

9. Public or Private Roadways*: N/A; NO ROADWAYS PROPOSED

   **Private Roads/Gated Communities may require a Traffic Enforcement Agreement with Mount Dora Police Department*

10. Is this project within the Joint Planning Agreement boundaries? ☐ Yes ☐ No

11. Zoning District: C-3 Future Land Use Category: COMMERCIAL

12. Building Size Existing (SF): 0 Proposed (SF): 2,776 SF

13. Total (SF): 2,776 SF

14. Proposed Number of Seats: 72

15. Size of property in Acres: 0.83 Square Feet: 36,321

16. Number of structures to be built on the site: 1

17. Height of structures(s): 24.58 FT Building Stories: 1

18. Total square footage of impervious surface: 23,013 SF

19. The percentage of lot coverage: 63.3%

20. Are vested rights being requested as part of this application?* ☐ Yes ☒ No

    **If no, by signing this application you are waiving any future vested development rights on this property.*

CERTIFICATION AND SIGNATURE

By my signature below, I certify that the information contained in this application is true and correct to the best of my knowledge at the time of the application. I acknowledge that I understand and have complied with all of the submittal requirements and procedures and that this application is a complete application submittal pursuant to the City's Land Development Code. I further understand that an incomplete application submittal may cause my application to be deferred to the next posted deadline date.

Digitally signed by Barbara White
Date: 2023.08.01 09:49:55 -04'00'

Owner/Applicant Signature

8.1.23

Date

PROPERTY RECORD CARD

General Information

Name:	EUDORA ROAD LLC	**Alternate Key:**	3618921
Mailing Address:	8 LANDFALL CIR EAST HAMPTON, NY 11937 *Update Mailing Address*	**Parcel Number:**	23-19-26-0004-000-10700
		Millage Group and City:	00MD Mount Dora
		2022 Total Certified Millage Rate:	18.8051
		Trash/Recycling/Water/Info:	*My Public Services Map*
Property Location:	EUDORA RD MOUNT DORA FL, 32757	**Property Name:**	-- *Submit Property Name*
		School Information:	*School Locator & Bus Stop Map* *School Boundary Maps*
Property Description:	FROM NE COR OF SE 1/4 RUN S ALONG E LINE OF SE 1/4 A DIST OF 582.79 FT TO S'LY R/W LINE OF SR 500, N 78DEG 16MIN 30SEC W 301.65 FT, S 02DEG 40MIN 30SEC E 277.17 FT FOR POB, RUN N 87DEG 19MIN 30SEC E 242.15 FT TO W'LY LINE OF EUDORA RD, S 02DEG 40MIN 30SEC E 150 FT, S 87DEG 19MIN 30SEC W 242.14 FT, N 02DEG 40MIN 30SEC W 150 FT TO POB ORB 6028 PG 266		

NOTE: This property description is a condensed/abbreviated version of the original description as recorded on deeds or other legal instruments in the public records of the Lake County Clerk of Court. It may not include the Public Land Survey System's Section, Township, Range information or the county in which the property is located. It is intended to represent the land boundary only and does not include easements or other interests of record. This description should not be used for purposes of conveying property title. The Property Appraiser assumes no responsibility for the consequences of inappropriate uses or interpretations of the property description.

Land Data

Line	Land Use	Frontage	Depth	Notes	No. Units	Type	Class Value	Land Value
1	VACANT COMMERCIAL (1000)	0	0		36321.000	Square Feet	$0.00	$217,545.00

Click here for Zoning Info Map **FEMA Flood**

Miscellaneous Improvements

There is no improvement information to display.

Sales History

NOTE: This section is not intended to be a complete chain of title. Additional official book/page numbers may be listed in the property description above and/or recorded and indexed with the Clerk of Court. Follow this link to search all documents by owner's name..

Book/Page	Sale Date	Instrument	Qualified/Unqualified	Vacant/Improved	Sale Price
6028 / 266	09/2022	Warranty Deed	Unqualified	Vacant	$425,000.00
5754 / 1683	06/2021	Warranty Deed	Unqualified	Vacant	$100.00
4772 / 1248	04/2016	Quit Claim Deed	Unqualified	Vacant	$100.00
1757 / 332	09/1999	Trustees Deed	Unqualified	Vacant	$1.00

Click here to search for mortgages, liens, and other legal documents.

Values and Estimated Ad Valorem Taxes

Values shown below are 2023 CERTIFIED VALUES (July 1 Preliminary Tax Roll Certification)

Tax Authority	Market Value	Assessed Value	Taxable Value	Millage	Estimated Taxes
LAKE COUNTY BCC GENERAL FUND	$217,545	$217,545	$217,545	5.0364	$1,095.64
SCHOOL BOARD STATE	$217,545	$217,545	$217,545	3.2500	$707.02
SCHOOL BOARD LOCAL	$217,545	$217,545	$217,545	2.9980	$652.20
LAKE COUNTY WATER AUTHORITY	$217,545	$217,545	$217,545	0.3083	$67.07
NORTH LAKE HOSPITAL DIST	$217,545	$217,545	$217,545	0.5000	$108.77
ST JOHNS RIVER FL WATER MGMT DIST	$217,545	$217,545	$217,545	0.1974	$42.94
CITY OF MOUNT DORA	$217,545	$217,545	$217,545	5.9603	$1,296.63
LAKE COUNTY MSTU AMBULANCE	$217,545	$217,545	$217,545	0.4629	$100.70
LAKE COUNTY VOTED DEBT SERVICE	$217,545	$217,545	$217,545	0.0918	$19.97
				Total: 18.8051	**Total:** $4,090.94

Exemptions Information

This property is benefitting from the following exemptions with a checkmark ✓

Homestead Exemption (first exemption up to $25,000)	Learn More	View the Law
Additional Homestead Exemption (up to an additional $25,000)	Learn More	View the Law
Limited Income Senior Exemption (applied to county millage - up to $50,000)	Learn More	View the Law
Limited Income Senior Exemption (applied to city millage - up to $25,000)	Learn More	View the Law
Limited Income Senior 25 Year Residency (county millage only-exemption amount varies)	Learn More	View the Law
Widow / Widower Exemption (up to $5,000)	Learn More	View the Law
Blind Exemption (up to $500)	Learn More	View the Law
Disability Exemption (up to $5,000)	Learn More	View the Law
Total and Permanent Disability Exemption (amount varies)	Learn More	View the Law
Veteran's Disability Exemption ($5,000)	Learn More	View the Law
Veteran's Total and Permanent Disability Exemption (amount varies)	Learn More	View the Law
Veteran's Combat Related Disability Exemption (amount varies)	Learn More	View the Law
Deployed Servicemember Exemption (amount varies)	Learn More	View the Law
First Responder Total and Permanent Disability Exemption (amount varies)	Learn More	View the Law
Surviving Spouse of First Responder Exemption (amount varies)	Learn More	View the Law
Conservation Exemption (amount varies)	Learn More	View the Law
Tangible Personal Property Exemption (up to $25,000)	Learn More	View the Law
Religious, Charitable, Institutional, and Organizational Exemptions (amount varies)	Learn More	View the Law
Economic Development Exemption	Learn More	View the Law
Government Exemption (amount varies)	Learn More	View the Law

NOTE: Information on this Property Record Card is compiled and used by the Lake County Property Appraiser for the sole purpose of ad valorem property tax assessment administration in accordance with the Florida Constitution, Statutes, and Administrative Code. The Lake County Property Appraiser makes no representations or warranties regarding the completeness and accuracy of the data herein, its use or interpretation, the fee or beneficial/equitable title ownership or encumbrances of the property, and assumes no liability associated with its use or misuse. See the posted Site Notice.

Copyright © 2014 Lake County Property Appraiser. All rights reserved.
Property data updated nightly.
Site Notice

INSTRUMENT#: 2022127464 OR BK 6028 PG 266 PAGES: 2 9/21/2022 3:08:46 PM
GARY J. COONEY, CLERK OF THE CIRCUIT COURT & COMPTROLLER, LAKE COUNTY, FLORIDA
REC FEES: $18.50 DEED DOC:$2975.00

Prepared by and return to:
Cody A. Chavis
Closing Agent
Seaplane Title, LLC
380 West Alfred Street
Tavares, FL 32778
352-343-6655
File Number: **19944**
Will Call No.:

[Space Above This Line For Recording Data]

Warranty Deed

This Warranty Deed made this 21st day of **September**, **2022** between **First Baptist Church of Leesburg, Inc., a Florida not for profit corporation** whose post office address is **220 North 13th Street, Leesburg, FL 34748**, grantor, and **Eudora Road LLC, a Florida Limited Liability Company** whose post office address is **8 Landfall Circle , East Hampton, NY 11937**, grantee:

(Whenever used herein the terms "grantor" and "grantee" include all the parties to this instrument and the heirs, legal representatives, and assigns of individuals, and the successors and assigns of corporations, trusts and trustees)

Witnesseth, that said grantor, for and in consideration of the sum of TEN AND NO/100 DOLLARS ($10.00) and other good and valuable considerations to said grantor in hand paid by said grantee, the receipt whereof is hereby acknowledged, has granted, bargained, and sold to the said grantee, and grantee's heirs and assigns forever, the following described land, situate, lying and being in **Lake County**, **Florida** to-wit:

A part of Section 23, Township 19 South, Range 26 East, Lake County, Florida, described as follows: From the Northeast corner of the SE 1/4 of Section 23, Township 19 South, Range 26 East, run S 02°40'30" E, along the East line of said SE 1/4 a distance of 582.79 feet to the Southerly Right-of-Way of State Road No. 500, said road having a total Right-of-Way of 200.0 feet; run thence N 78°16'30" W along said Southerly Right-of-Way 51.65 feet to the Westerly Right-of-Way of a 100-ft wide road, according to the State of Florida Department of Transportation Right-of-Way Map Section 11522-2601 dated February, 1970; thence S 02°40'30" E along the Westerly Right-of-Way of Eudora Road (dist. 44264) a distance of 215.0 feet to the Point of Beginning of this description; from said Point of Beginning, continue S 02°40'30" E along said Westerly Right-of-Way of Eudora Road, 150.0 feet; thence leaving said Right-of-Way run S 87°19'30" W, 242.15 feet; thence N 02°40'30" W, 150.0 feet; thence N 87°19'30" E, 242.15 feet to the Point of Beginning.

Parcel Identification Number: 23-19-26-0004-000-10700

Subject to taxes for 2022 and subsequent years; covenants, conditions, restrictions, easements, reservations and limitations of record, if any.

Together with all the tenements, hereditaments and appurtenances thereto belonging or in anywise appertaining.

To Have and to Hold, the same in fee simple forever.

And the grantor hereby covenants with said grantee that the grantor is lawfully seized of said land in fee simple; that the grantor has good right and lawful authority to sell and convey said land; that the grantor hereby fully warrants the title to said land and will defend the same against the lawful claims of all persons whomsoever; and that said land is free of all encumbrances, except taxes accruing subsequent to **December 31, 2021**.

In Witness Whereof, grantor has hereunto set grantor's hand and seal the day and year first above written.

Signed, sealed and delivered in our presence:

First Baptist Church of Leesburg, Inc., a Florida non-profit corporation

By: Gary Teague
Gary Teague, President

(Corporate Seal)

Witness Name: Cody A. Chavis

Witness Name: Cynthia L. Chavis

State of Florida
County of Lake

The foregoing instrument was acknowledged before me by means of [X] physical presence or [_] online notarization, this 21ST day of September, 2022 by Gary Teague, President of First Baptist Church of Leesburg, Inc., a Florida non-profit corporation, on behalf of the corporation. He [X] is personally known to me or [_] has produced _____ as identification.

[Notary Seal]

Notary Public

Printed Name: Cynthia L. Chavis

My Commission Expires: _____

CYNTHIA L. CHAVIS
MY COMMISSION # HH 178157
EXPIRES: January 19, 2026
Bonded Thru Notary Public Underwriters

DoubleTime®

100 E. Pine Street, Suite 600
Orlando, FL 32801
o: 407.246.0044

Traffic Impact Study
for
Freddy's Frozen Custard & Steakburgers

Mt. Dora, FL

Prepared By:
Protean Design Group, Inc.
100 East Pine Street, Suite 600
Orlando, Fl 32801

o: 407.246.0044

July 2024

PROFESSIONAL ENGINEERING CERTIFICATION

I hereby certify that I am a Professional Engineer property registered in the State of Florida practicing with Protean Design Group, Inc., a corporation authorized to operates as an engineering business by the State of Florida Department of Professional Regulation, Board of Professional Engineers, and that I have prepared or approved the evaluations, findings, opinions, conclusions, or technical advice attached hereto for:

PROJECT: Freddy's Frozen Custard and Steakburgers

LOCATION: Mt. Dora, FL

CLIENT: FFC of Central Florida, LLC

I hereby acknowledge that the procedures and references used to develop the results contained in these computations are standard to the professional practice of Transportation Engineering as applied through professional judgement and experience.

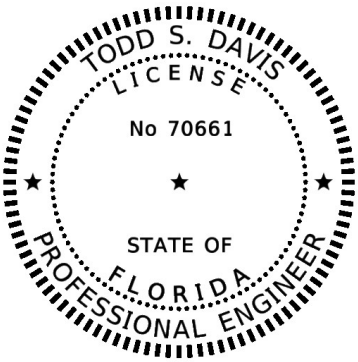

This item has been digitally signed and sealed by:

On the date adjacent to the seal:

Printed copies of this document are not considered signed and sealed and the signature must be verified on any electronic copies.

Protean Design Group, Inc.
100 East Pine Street, Suite 600
Orlando, FL 32801
Attn: Todd Davis, P.E., PTOE, RSP_1 (P.E. NO. 70661)

TABLE OF CONTENTS

1.0 INTRODUCTION……1

Study Area……1

2.0 EXISTING CONDITIONS……..…… 4

Roadway Segment Analysis…….……4

Intersection Analysis…….6

3.0 PROJECT DEVELOPMENT….……8

Background Traffic Projections…… 8

Trip Generation…….…… 8

Trip Distribution……..…….……..….10

Trip Assignment…….……..…..……..... 11

Significance Analysis….…….……..…..……..... 12

4.0 FUTURE (YR 2025) BACKGROUND CONDITIONS…….……..…… 14

Future (YR 2025) Background Traffic……...……... 14

Future (YR 2025) Background Intersection Analysis…….....……... 15

5.0 BUILD-OUT FUTURE (YR 2025) CONDITIONS…….…….……16

Future (YR 2025) Roadway Segment Analysis...……..……. 16

Programmed Improvements…….……...…….16

Future (YR 2025) Intersection Segment Analysis……..…….18

Access Needs……..……19

Turn Lane Analysis…….……..…….. 19

6.0 CONCLUSION AND RECOMMENDATION…….20

TABLE OF CONTENTS (cont.)

LIST OF TABLES

Table		Page
1	Existing Roadway Capacity Analysis	5
2	Existing (2024) Intersections Conditions	6
3	Trip Generation	8
4	Significance Analysis	13
5	Future (2025) Background Intersection Conditions	15
6	Future (2025) Roadway Capacity Analysis	17
7	Future (2025) Build-Out Intersection Conditions	18
8	Future (2025) Driveway Conditions	19

LIST OF FIGURES

Table		Page
1	Site Location Map	2
2	Site Access	3
3	Existing Intersection Geometry	7
4	Trip Distribution	10
5	Trip Assignment	11
6	Future (YR 2025) Background Turning Movement Volumes	14

APPENDIX

A	Methodology and Correspondence
B	Site Plan
C	Lake-Sumter MPO Congestion Management Plan (CMP) – Lake County
D	Data Collection
E	SYNCHRO Summary Sheets
F	ITE Trip Generation Worksheets
G	Projected Intersection Analysis Worksheets

1.0 Introduction

The purpose of this report is to document the anticipated traffic impacts associated with the proposed Freddy's Frozen Custard & Steakburgers in the City of Mt. Dora, Florida. The proposed project consists of a 3,006 square foot fast-food restaurant with drive-thru, on parcel 23-19-26-0004-000-10700. The site is generally located within the urban area of Mt. Dora, along the west side of Eudora Road, south of U.S. 441, south of the 7/11 gas station, as shown in **Figure 1**. The anticipated opening year is 2025.

The procedures taken in this analysis are consistent with the methodology submitted and approved (with comments) by the City of Mt. Dora Planning Department, see **Appendix A**. This report is consistent with the requirements of the City of Mt. Dora for a Tier 2 TIS.

Access to the site is proposed via an internal roadway network within the Tri Cities Plaza and neighboring 7/11 gas station. Access to the external roadway network will be provided via the 2 full access driveway connections to Eudora Road, within the proposed site plan provided in **Appendix B**.

The anticipated transportation impacts were projected using trip generation equations documented in the Institute of Transportation Engineers (ITE) Trip Generation Manual (11th Edition) – *ITE Code 934*. These trip projections were then superimposed upon the total traffic identified for Sumter County roadways within the vicinity of the Project. A copy of the Lake-Sumter Metropolitan Planning Organization (MPO) Congestion Management Program (CMP) - Lake County information has been provided in **Appendix C** of this report. The resulting traffic volumes were then compared against the total capacity during the PM peak hour to access the future operating conditions of the study area roadways.

Study Area

In accordance with the City of Mt. Dora Traffic Impact Study Guideline requirements for a Tier 2 TIS methodology, the study area will encompass roadway segments and intersections located within 1.38-mile of the proposed site access, based on the "as the car drives" distance. Based on the methodology comments, Additional analysis will be required for the adjacent roadway segment and any additional segments where project traffic is anticipated to consume more than 5% of the adopted capacity. The roadway segments identified by the significance test will be analyzed in the Tier 2 TIS.

Based on the study area analysis, and identified within the approved methodology, the following roadway segments and intersections will be analyzed as part of this study:

Study Roadway Segments

- U.S. 441: David Walker Drive to S.R. 44
- S.R. 19: Golf Links Avenue to Lakeshore Boulevard
- C.R. 19-A (Dora Avenue): David Walker Drive to C.R. 44-C
- C.R. 500-A: Bay Road to Lakeshore Drive
- Old Mount Dora Road: S.R. 19 to U.S. 441

Study Roadway Segments (cont.)

- Morningside Drive: U.S. 441 to Old U.S. 441
- Eudora Road: Old Mt. Dora Road to U.S. 441
- C.R. 44-C/Eudora Road: U.S. 441 to Old U.S. 441
- Bay Road: C.R. 19-A to Old U.S. 441

Study Intersections

- U.S. 441 at C.R. 44-C/Eudora Road (signalized)
- U.S. 441 at Spring Harbor Boulevard (signalized)
- C.R. 44-C/Eudora Road at 7/11 Gas Station Driveway (un-signalized)
- C.R. 44-C/Eudora Road at Tri-Cities Plaza Driveway (un-signalized)

Figure 1: Site Location Map and Study Area Limits

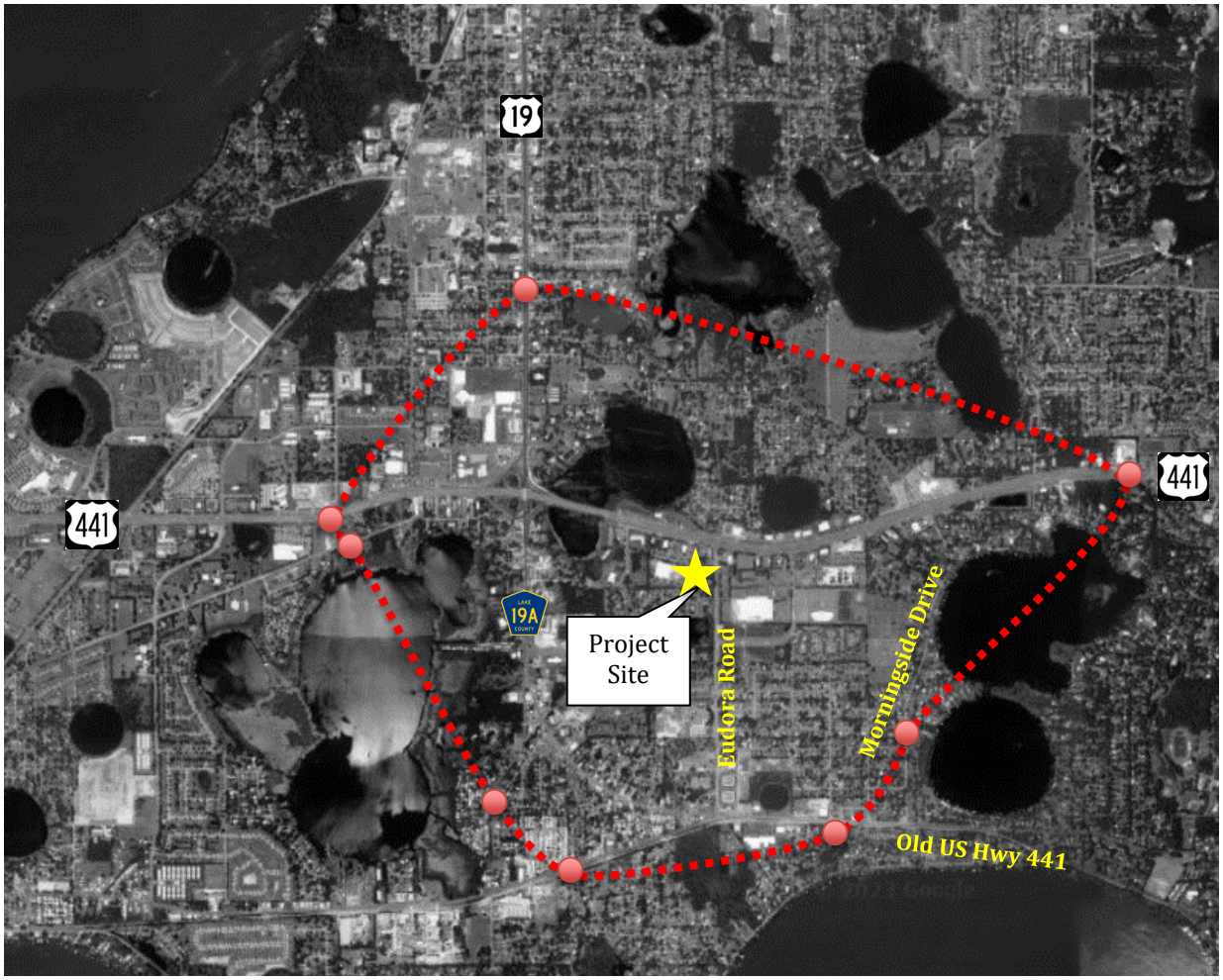

1.38-mile Radius (as the car drives)

Figure 2: Site Access

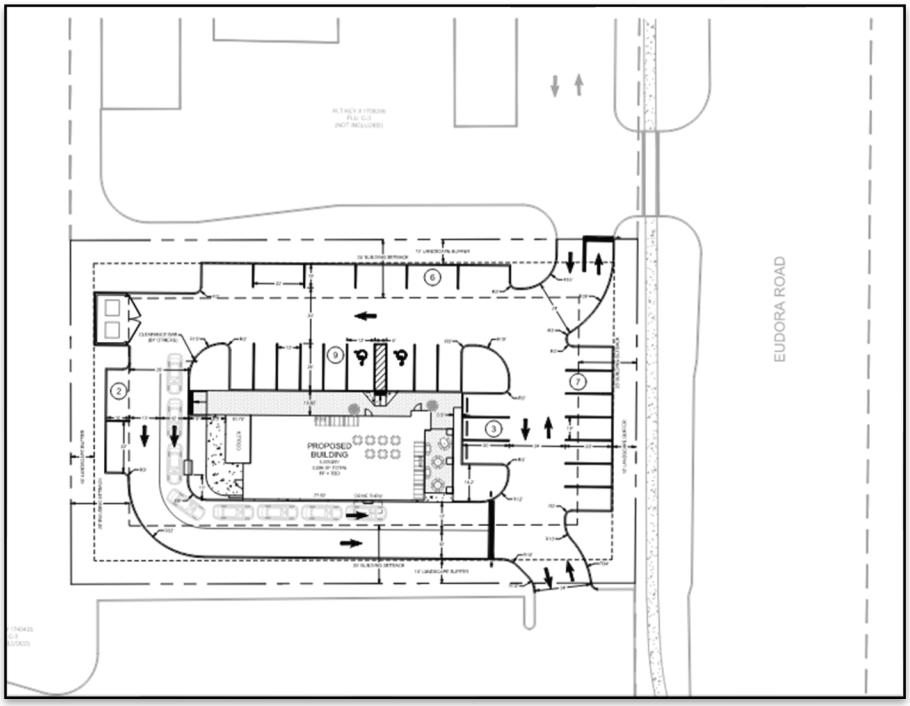

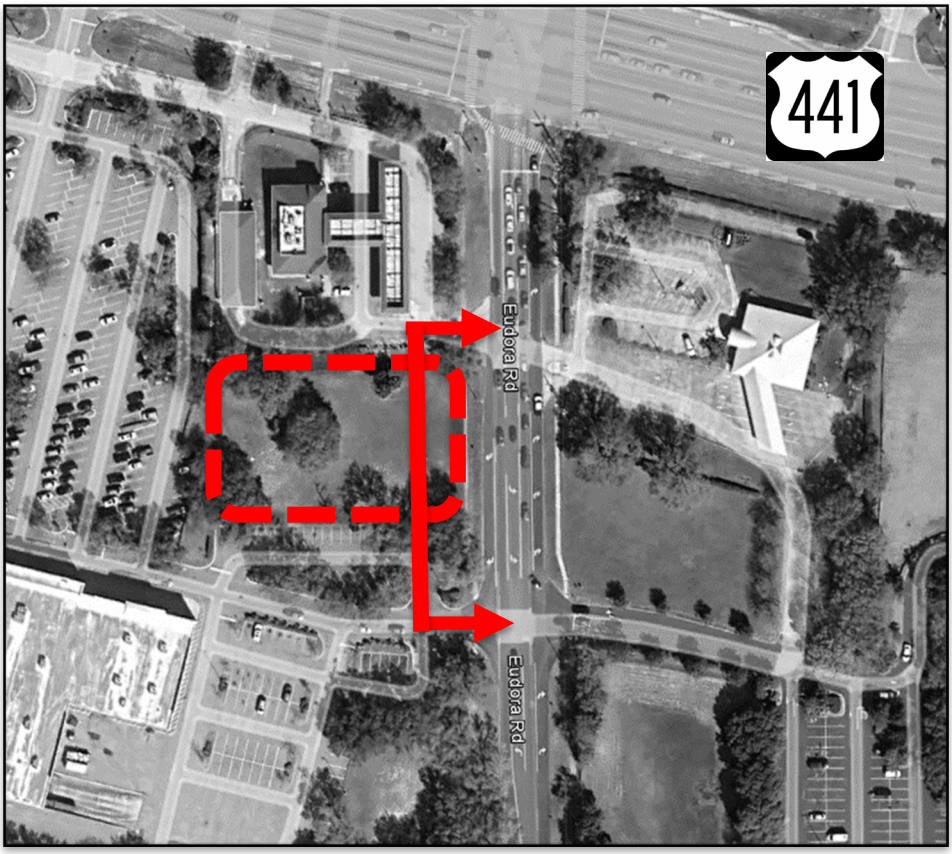

2.0 Existing Conditions

The following section documents the existing roadway conditions in the vicinity of the proposed project. All study area roadways are required to maintain a level of service (LOS) target consistent with those listed in the Lake-Sumter MPO CMP. Existing conditions for the study area roadway segments are summarized in **Table 1**. In addition, Protean Design Group utilized available Lake County traffic counts and/or assembled the necessary traffic counts for the intersections identified within the Study Area. The PM (4:00-6:00 PM) peak hour volumes were collected during the month of June 2024.

Roadway Segment Analysis

The study roadway segments were analyzed by comparing the existing traffic volumes of each segment with the adopted level of service/capacity values for the PM peak hour. The existing traffic volumes and the adopted capacities for each segment were obtained from the MPO's CMP Database. The existing PM peak hour, peak direction roadway capacity analysis is summarized in **Table 1**. Relevant information on existing traffic volumes and roadway capacities is included in the Lake County's CMP sheets (see **Appendix C**).

As shown in **Table 1**, the existing conditions analysis of PM peak hour traffic conditions indicate that the study roadway segments currently operate within their adopted level of service capacities.

Table 1

Freddy's Frozen Custard and Steakburgers

Existing Roadway Capacity Analysis

Roadway/Segment	No. of Lanes	LOS Target	Jurisdiction	AADT	PM Peak Hour			
					Capacity	NB/EB	SB/WB	LOS
U.S. 441								
David Walker Drive to S.R. 19/Bay Street	6	D	City of Eustis	53,100	2,814	1,886	1,950	C
S.R. 19/Bay Street to Eudora Road	6	D	Eustis/Mt. Dora	46,000	2,814	1,775	1,818	C
Eudora Road to Old Mt. Dora Road	6	D	Eustis/Mt. Dora	46,000	2,814	1,775	1,818	C
Old Mt. Dora Road to S.R. 44	6	D	City of Mount Dora	46,000	2,814	1,775	1,818	C
S.R. 19								
Golf Links Avenue to U.S. 441	4	D	City of Eustis	20,550	1,901	1,209	761	C
U.S. 441 to Lakeshore Boulevard	4	D	City of Tavares	18,590	1,810	810	587	C
C.R. 19A / Dora Avenue								
David Walker Road to U.S. 441	2	D	City of Tavares	3,628	1,011	180	146	C
U.S. 441 to Bay Road/C.R. 19A	2	D	Eustis/ Mt. Dora	14,178	1,011	598	564	C
Bay Road/C.R. 19A to C.R.44C/C.R. 500A	2	D	City of Mt. Dora	9,199	1,049	362	351	C
C.R. 500A / Old U.S. 441								
Bay Road to C.R. 44C/Eudora Avenue	2	D	City of Mt. Dora	9,508	770	382	409	C
C.R. 44C/Eudora Drive to Lakeshore Drive	2	D	City of Mt. Dora	15,440	1,062	643	620	C
Old Mount Dora Road								
S.R. 19 to Eudora Road	2	D	City of Eustis	5,580	799	261	231	C
Eudora Road to U.S. 441	2	D	City of Eustis	5,580	799	261	231	C
Morningside Drive								
U.S. 441 to Old U.S. 441	2	D	Unincorporated Lake county	2,141	799	79	98	C
Eudora Road								
Old Mt. Dora Road to U.S. 441	2	D	City of Eustis	2,998	799	147	123	C
C.R. 44C / Eudora Road								
U.S. 441 to Old U.S. 441	2	D	City of Mt. Dora	10,071	963	426	419	C
Bay Road								
C.R. 19A to Old U.S. 441/ C.R. 500A	2	D	Unincorporated Lake County	3,079	799	139	165	C

Source: 2023 Lake-Sumter MPO Congestion Management Plan (CMP)
2023 FDOT Multimodal Quality / Level of Service Handbook

Intersection Analysis

The study intersections were analyzed in accordance with the procedures of the Highway Capacity Manual (HCM), 6th Edition, using the Synchro software. The capacity analysis at the intersections was performed using the existing intersection geometry and traffic volumes during the PM peak hour. The traffic counts were taken in June 2024, with the appropriate seasonal factor applied, based on the FDOT peak seasonal factor report. The raw intersection counts, seasonal adjustment factor report, and signal timings are included in **Appendix D**.

The intersection capacity analysis results are summarized below in **Table 2**. Detailed Synchro summary worksheets are included in **Appendix E**.

Table 2

Existing (YR 2024) Intersection Conditions

Intersection	Control	LOS	Delay (sec/veh)
U.S. 441 at Eudora Road	Signal	D	43.8
U.S. 441 at Spring Harbor Boulevard	Signal	C	34.5
Eudora Road at 7/11 Driveway	Stop	A/B	0.1/12.9
Eudora Road at Tri-Cities Plaza Driveway	Stop	A/F	2.1/102.7

As shown within **Table 2**, all study area intersections currently operate at an acceptable level of service during the existing conditions, with the exception of the unsignalized intersection of Eudora Road at the Tri-Cities Plaza driveway connection.

Figure 3, on the following page, depicts the existing intersection geometry of all study area Intersections.

Figure 3: Existing Intersection Geometry

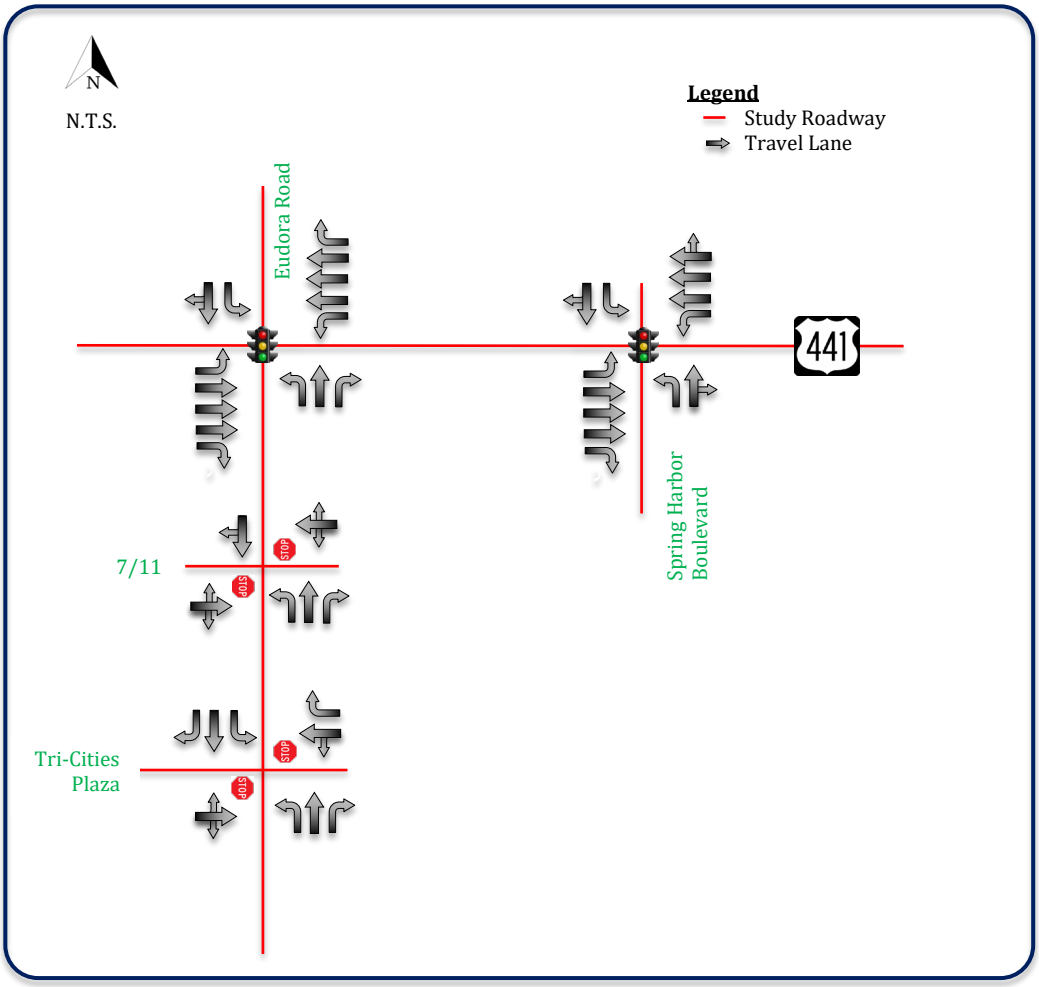

3.0 Project Development

This section of the report identifies the anticipated travel conditions for the study area roadways and intersections as a result of the project created traffic. As documented in the approved methodology, the analysis year for the proposed development is YR 2025. The site traffic for the proposed development was added to the background traffic volumes in order to assess the total operating conditions of the study area roadways and intersections.

Background Traffic Projections

The background traffic was developed based on the growth rate identified within the Lake-Sumter MPO CMP for each of the respective roadway segments. For roadways not listed within the Lake County monitored roadways, the roadway and intersection volumes were grown at their respective rate per year to reflect YR 2025 conditions. Per the methodology comments from the City, a minimum 2.0% annual growth rate was assumed for all roadways, even if included within the CMP at an 1.0% annual growth rate.

Trip Generation

The trip generation data was based on the trip generation equations outlined in the Institute of Transportation Engineers (ITE) Trip Generation Manual, 11th edition. **Table 3** summarizes the resulting trip generation analysis. A copy of the ITE Trip Generation Worksheets can be found in **Appendix F**.

Table 3

Trip Generation Summary

ITE Code	Land Use	Size		Daily Trips	PM Peak Hour		
					Enter	Exit	Total
934	Fast Food Restaurant with Drive-Thru	3,006	SF	1,407	52	47	99
Passer-by Trips				352	12	12	24
External "Net New" Trips				**1,055**	**40**	**35**	**75**

Source: ITE Trip Generation Manual, 11th Edition
ITE Trip Generation Handbook, 3rd Edition
Pass-by capture was limited to 25% of the total trip generation, per the Mt. Dora TIS Guidelines

For retail land uses, such as shopping centers and restaurants, experience a pass-by trip "capture" from the adjacent traffic stream. Pass-by trips are made as intermediate stops on the way from an origin to a primary trip destination without a route diversion and are currently on the existing network and existed before the development and therefore shall not be included in the new trip estimates. The ITE Trip Generation Handbook, 3rd Edition recommended a 50% passer-by rate for a fast-food restaurant, with drive thru (ITE Code 934). In general, pass-by trips should not exceed 10% of the background traffic on the adjacent segment. This equates to a maximum pass-by of 85 PM peak hour trips, as there are 845 vehicles along Eudora Road during the PM peak hour. However, based on the due to the nature of some developments and as outlined within the City of Mt. Dora Traffic Impact Study (TIS) Guidelines, a pass-by rate not exceeding 25% of total trip generation may be applied to projects such as fast-food restaurants. Therefore, the pass-by rate for the proposed project was limited to 25% of the total trip generation.

The proposed restaurant is anticipated to generate approximately 1,055 daily net new external trips and 75 PM peak hour external trips (40 enter / 35 exit).

Trip Distribution

A manual distribution of the project traffic was performed and adjusted based on local knowledge, professional engineering judgement, and the location of the development with respect to the study area to reflect the local travel patterns in the vicinity of the site and the surrounding transportation network. **Figure 4** displays the anticipated trip distribution for the proposed development, consistent with the approved methodology.

Figure 4: Traffic Distribution

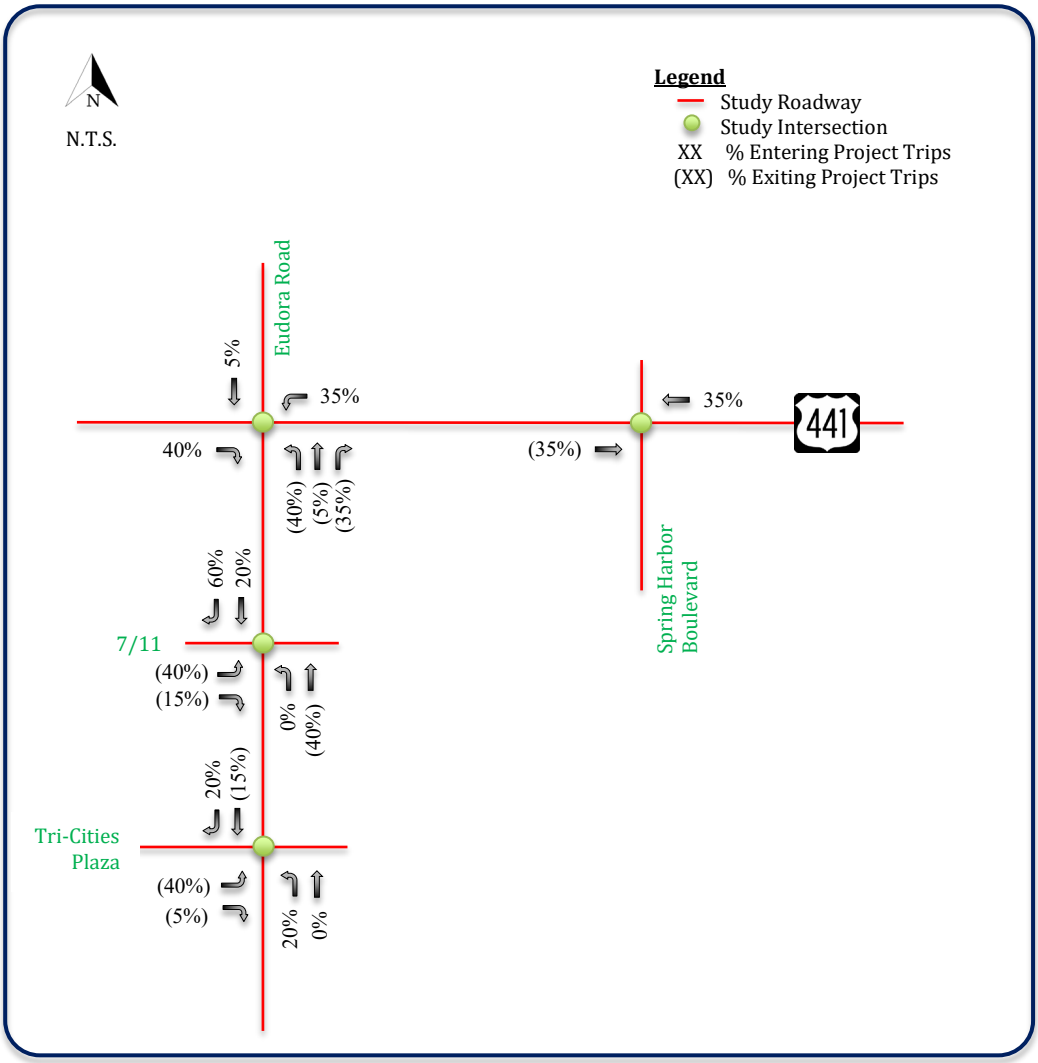

Trip Assignment

Project distribution percentages were used to assign anticipated project trips to the study area intersections. **Figure 5** displays the anticipated PM peak hour project movements at the study area intersections.

Figure 5: Traffic Assignment

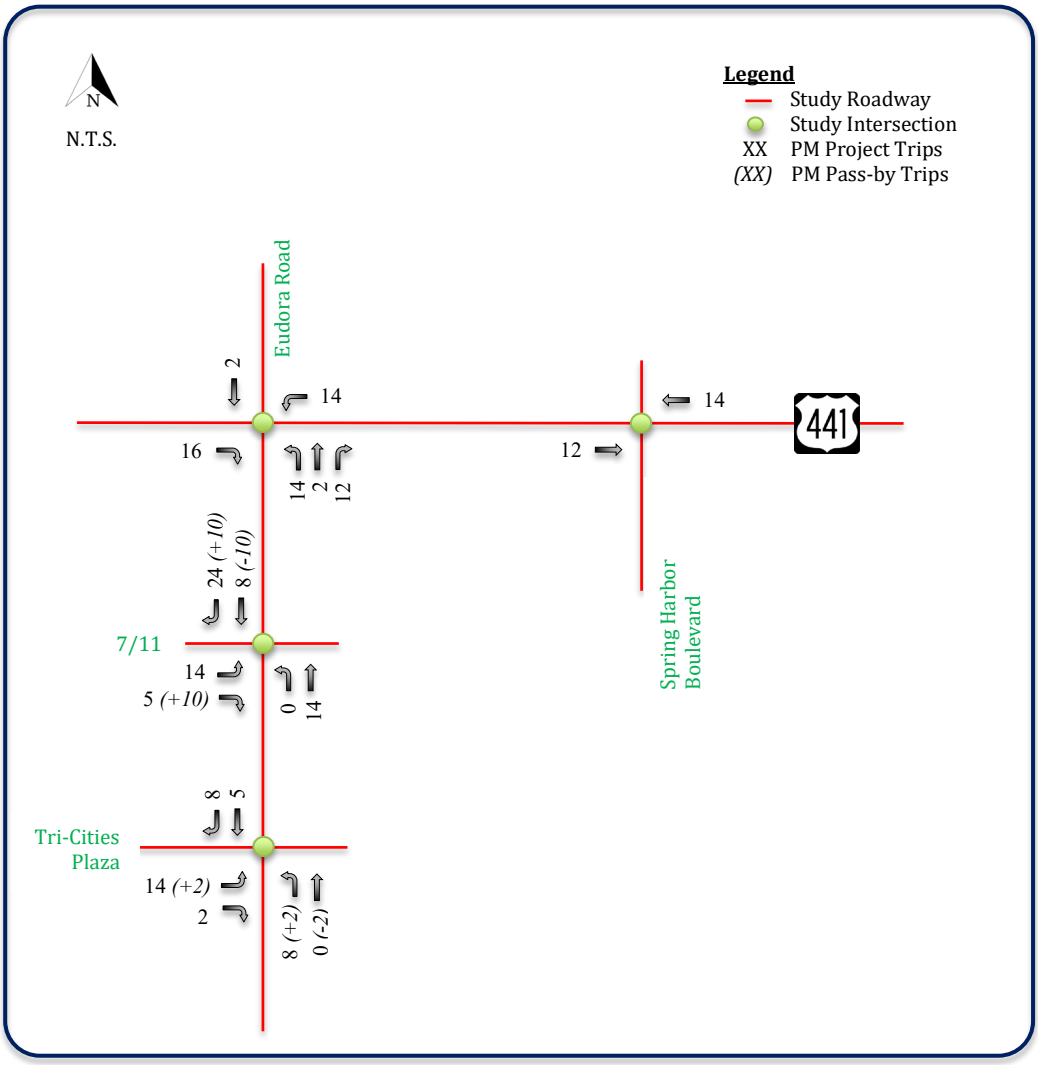

Significance Analysis

As per the City of Mt. Dora TIS procedures and requirements, the influence area of the proposed project will include those roadway segments where project trips consume 5% or more of the adopted Level of Service. Based upon the significance test performed, as shown in **Table 4**, the project will not consume 5.0% or more of the adopted LOS on the surrounding roadway segments.

Per the methodology review and comments, and because of the significant pass-by nature of the proposed restaurant, intersections in the study area include the following:

- U.S. 441 at Eudora Road
- U.S. 441 at Spring Harbor Boulevard
- Eudora Road at 7/11 Gas Station (un-signalized)
- Eudora Road at Tri-Cities Plaza (un-signalized)

Table 4

Freddy's Frozen Custard and Steakburgers

Significance Analysis

Roadway/Segment	No. of Lanes	LOS Target	LOS Capacity	Project Traffic				Within 1.38-mile radius?	% Cap	Significant?
				% Dist	PM Peak Hour					
					NB/EB	SB/WB	Total			
U.S. 441										
David Walker Drive to S.R. 19/Bay Street	6	D	2,814	30%	12	11	23	Yes	0.4%	No
S.R. 19/Bay Street to Eudora Road	6	D	2,814	40%	16	14	30	Yes	0.6%	No
Eudora Road to Old Mt. Dora Road	6	D	2,814	35%	12	14	26	Yes	0.5%	No
Old Mt. Dora Road to S.R. 44	6	D	2,814	25%	9	10	19	Yes	0.4%	No
S.R. 19										
Golf Links Avenue to U.S. 441	4	D	1,901	10%	4	4	8	Yes	0.2%	No
U.S. 441 to Lakeshore Boulevard	4	D	1,810	0%	0	0	0	Yes	0.0%	No
C.R. 19A / Dora Avenue										
David Walker Road to U.S. 441	2	D	1,011	0%	0	0	0	Yes	0.0%	No
U.S. 441 to Bay Road/C.R. 19A	2	D	1,011	0%	0	0	0	Yes	0.0%	No
Bay Road/C.R. 19A to C.R.44C/C.R. 500A	2	D	1,049	5%	2	2	4	Yes	0.2%	No
C.R. 500A / Old U.S. 441										
Bay Road to C.R. 44C/Eudora Avenue	2	D	770	5%	2	2	4	Yes	0.3%	No
C.R. 44C/Eudora Drive to Lakeshore Drive	2	D	1,062	5%	2	2	4	Yes	0.2%	No
Old Mount Dora Road										
S.R. 19 to Eudora Road	2	D	799	5%	2	2	4	Yes	0.3%	No
Eudora Road to U.S. 441	2	D	799	5%	2	2	4	Yes	0.3%	No
Morningside Drive										
U.S. 441 to Old U.S. 441	2	D	799	5%	2	2	4	Yes	0.3%	No
Eudora Road										
Old Mt. Dora Road to U.S. 441	2	D	799	5%	2	2	4	Yes	0.3%	No
C.R. 44C / Eudora Road										
U.S. 441 to Project Entrance	2	D	963	80%	28	32	60	Yes	3.3%	No
Project Entrance to Old U.S. 441	2	D	963	20%	8	7	15	Yes	0.8%	No
Bay Road										
C.R. 19A to Old U.S. 441/ C.R. 500A	2	D	799	0%	0	0	0	Yes	0.0%	No

4.0 Future (YR 2025) Background Conditions

Future (YR 2025) Background Traffic

Traffic conditions were evaluated for the year 2025 background conditions. Background volumes at the study area intersections were derived by applying the annual growth identified within the LSMPO CMP (minimum 2.0%) to the existing traffic volumes. Turning movement volumes for the PM peak hour background conditions are illustrated in **Figure 6**.

Figure 6: Future (YR 2025) Background Turning Movement Volumes

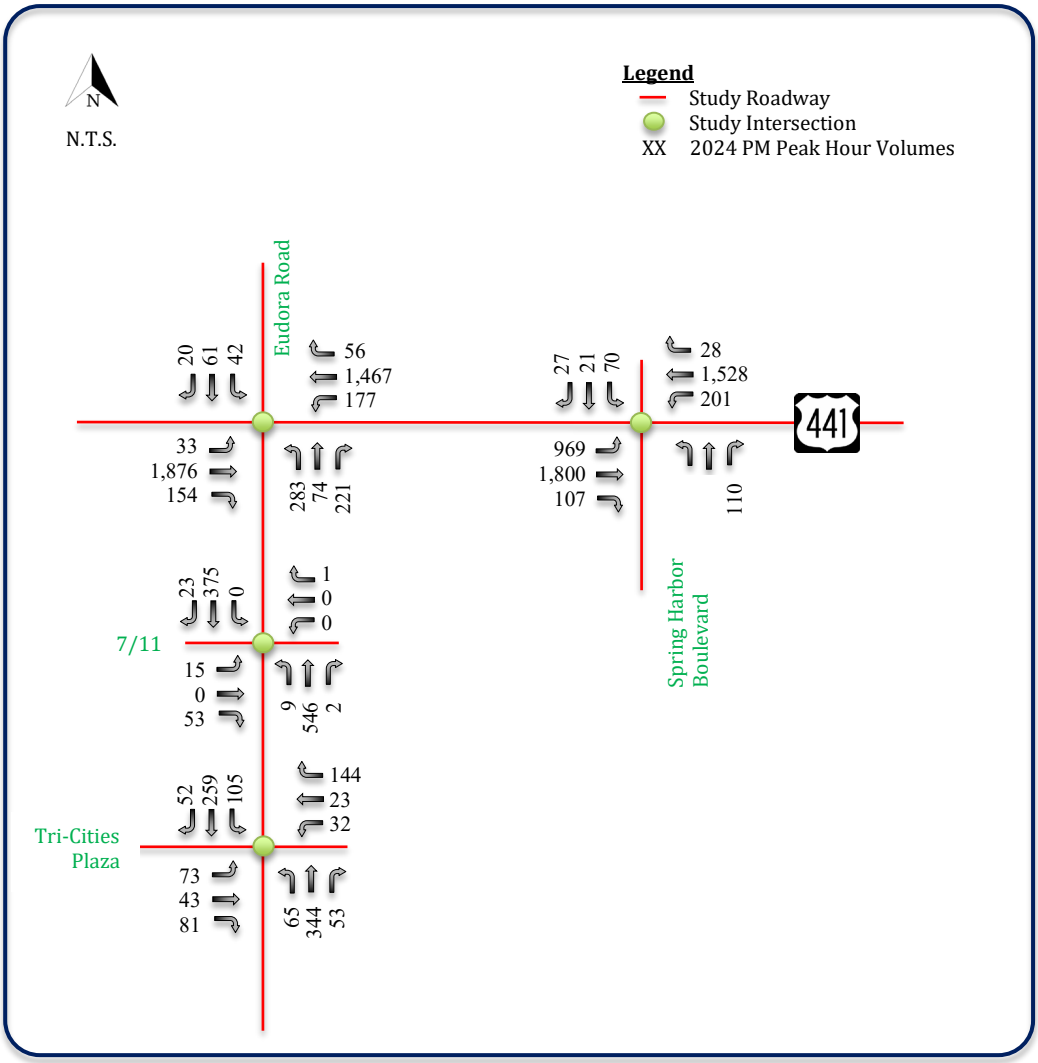

Future (YR 2025) Background Intersection Analysis

Where available, growth rates identified within the Lake-Sumter MPO CMP were applied to the approach movements based upon the existing traffic patterns. For roadways not included within the CMP, a minimum of 1% growth rate was applied to the intersection movements. The YR 2025 Synchro summary sheets can be found in **Appendix D** of this report. The following **Table 5** summarizes the results of the YR 2025 Background Intersection Capacity Analysis.

Table 5

Future (2025) Background Intersection Conditions

Intersection	Control	LOS	Delay (sec/veh)
U.S. 441 at Eudora Road	Signal	D	45.2
U.S. 441 at Spring Harbor Boulevard	Signal	D	35.2
Eudora Road at 7/11 Driveway	Stop	A/B	0.1/13.1
Eudora Road at Tri-Cities Plaza Driveway	Stop	A/F	2.1/121.1

As shown in **Table 5**, all intersections are expected to operate at an appropriate level of service under background (YR 2025) PM peak hour conditions, with the exception of the unsignalized intersection of Eudora Road at the Tri-Cities Plaza driveway. However, this intersection is currently unsignalized and operates at an LOS 'F' similar to the existing conditions.

5.0 Build-out Future (YR 2025) Conditions

Future (YR 2025) Roadway Segment Analysis

The 2025 peak-hour roadway volumes in the Lake-Sumter MPO CMP Database were grown to the build-out year and project trips added to each segment. The total future volumes were compared to the peak-hour directional service volume in the database to determine if the future volumes exceed the level of service standard for the roadway. As shown in **Table 6**, none of the study area segments are anticipated to exceed the service volume thresholds for the roadway, indicating that no roadway capacity projects will be needed due to the proposed development.

Programmed Improvements

The Lake County 5-year Transportation Improvement Plan (FY 2023 to FY 2027) was reviewed and one (1) programmed improvement was identified within the study area. The Eudora Road roundabout at the intersection of Old U.S. 441 with Eudora Road is programmed for construction in FY 2023 (FM# 437464-1).

The FDOT Work Program and the Lake-Sumter MPO (LSMPO) Transportation Improvement Program (TIP) were also reviewed. There are no planned or programmed improvements identified within the LSMPO. There was one (1) programmed project improvement identified within the FDOT Work Program. The S.R. 44 corridor, from U.S. 441 to south of S.R. 44, is programmed for the design of a pavement only resurfacing project in FY 2025 (FM# 452646-1); however, there are no anticipated improvements / enhancements to be included as part of this resurfacing project.

Table 6

Freddy's Frozen Custard and Steakburgers

Future (2025) Roadway Conditions

Roadway/Segment	No. of Lanes	LOS Target	PM Peak Hour Capacity	Growth	Future Background Traffic PM Peak Hour			External "New New" Trips PM Peak Hour				YR 2025 Total Traffic			
					NB/EB	SB/WB	LOS	% Dist	NB/EB	SB/WB	Total	NB/EB	SB/WB	LOS	Adv?
U.S. 441															
David Walker Drive to S.R. 19/Bay Street	6	D	2,814	2.0%	1,961	2,028	C	30%	12	11	23	1,973	2,039	C	No
S.R. 19/Bay Street to Eudora Road	6	D	2,814	2.0%	1,846	1,891	C	40%	16	14	30	1,862	1,905	C	No
Eudora Road to Old Mt. Dora Road	6	D	2,814	2.0%	1,846	1,891	C	35%	12	14	26	1,858	1,905	C	No
Old Mt. Dora Road to S.R. 44	6	D	2,814	2.0%	1,846	1,891	C	25%	9	10	19	1,855	1,901	C	No
S.R. 19															
Golf Links Avenue to U.S. 441	4	D	1,901	3.0%	1,282	807	C	10%	4	4	8	1,286	811	C	No
U.S. 441 to Lakeshore Boulevard	4	D	1,810	2.0%	842	610	C	0%	0	0	0	842	610	C	No
C.R. 19A / Dora Avenue															
David Walker Road to U.S. 441	2	D	1,011	2.0%	187	152	C	0%	0	0	0	187	152	C	No
U.S. 441 to Bay Road/C.R. 19A	2	D	1,011	2.0%	622	587	C	0%	0	0	0	622	587	C	No
Bay Road/C.R. 19A to C.R.44C/C.R. 500A	2	D	1,049	2.0%	376	365	C	5%	2	2	4	378	367	C	No
C.R. 500A / Old U.S. 441															
Bay Road to C.R. 44C/Eudora Avenue	2	D	770	3.75%	411	440	C	5%	2	2	4	413	442	C	No
C.R. 44C/Eudora Drive to Lakeshore Drive	2	D	1,062	2.0%	669	645	C	5%	2	2	4	671	647	C	No
Old Mount Dora Road															
S.R. 19 to Eudora Road	2	D	799	2.0%	271	240	C	5%	2	2	4	273	242	C	No
Eudora Road to U.S. 441	2	D	799	2.0%	271	240	C	5%	2	2	4	273	242	C	No
Morningside Drive															
U.S. 441 to Old U.S. 441	2	D	799	6.0%	88	110	C	5%	2	2	4	90	112	C	No
Eudora Road															
Old Mt. Dora Road to U.S. 441	2	D	799	2.0%	153	128	C	5%	2	2	4	155	130	C	No
C.R. 44C / Eudora Road															
U.S. 441 to Project Entrance	2	D	963	2.0%	443	436	C	80%	28	32	60	471	468	C	No
Project Entrance to Old U.S. 441	2	D	963	2.0%	443	436	C	20%	8	7	15	451	443	C	No
Bay Road															
C.R. 19A to Old U.S. 441/ C.R. 500A	2	D	799	2.0%	145	172	C	0%	0	0	0	145	172	C	No

Source: 2023 Lake-Sumter MPO Congestion Management Plan (CMP)
2023 FDOT Multimodal Quality / Level of Service Handbook

Future (YR 2025) Intersection Analysis with Project Traffic

Future traffic conditions for the proposed development were evaluated for the year 2025 conditions. The study area intersections were then evaluated in order to quantify the impacts created by the proposed development. The following table summarizes the results of the YR 2025 Intersection Capacity Analysis. The resultant adjusted turning movement volume, with the addition of the project trips, worksheets for the study intersections are provided in **Appendix F**.

Table 7

Future (2025) Build-out Intersection Conditions

Intersection	**Control**	**LOS**	**Delay (sec/veh)**
U.S. 441 at Eudora Road	Signal	D	49.5
U.S. 441 at Spring Harbor Boulevard	Signal	D	35.2
Eudora Road at 7/11 Driveway	Stop	A/B	0.1/14.8
Eudora Road at Tri-Cities Plaza Driveway	Stop	A/F	2.1/187.6

As shown above, the study intersections are anticipated to operate at an acceptable level of service in the PM peak hour with the addition of the project traffic, with the exception of the unsignalized intersection of Eudora Road at the Tri-Cities Plaza driveway connection. However, this intersection is currently unsignalized and operates at an LOS 'F' similar to the existing conditions. The YR 2025 Synchro summary sheets can be found in **Appendix D** of this report.

Access Needs

As previously mentioned, the proposed restaurant will be accessed via the internal parking lot circulation with the neighboring parcels, the 7/11 gas station and Tri-Cities Plaza. Therefore, access to the restaurant will utilize the existing driveway connections to Eudora Road. Eudora Road is a two-lane undivided roadway with a posted speed limit of 35 mph in the vicinity of the site. To further analyze the impact of the proposed development, an intersection analysis was performed using the Synchro Software.

Table 8

Future (2025) Driveway Conditions

		LOS / Delay (sec/veh)			
Intersection	**Control**	**NB**	**SB**	**EB**	**WB**
Eudora Road at 7/11 Driveway	Stop	A (0.1)	A (0.0)	B (14.8)	B (10.2)
Eudora Road at Tri-Cities Plaza Driveway	Stop	A (1.3)	A (2.1)	F (187.6)	C (22.4)

At the intersection of Eudora Road and the Tri-Cities Plaza driveway results in the eastbound minor street approach experiencing delays resulting in LOS F traffic conditions during the PM peak hour. This intersection has a relatively low traffic volume not anticipated to meet the signal warrant criteria outlined in the FDOT Manual on Uniform Traffic Standards (MUTS). However, the developer will coordinate with the City of Mt. Dora and monitor the intersection for potential future signalization at project build-out.

Turn Lane Analysis

The proposed restaurant will connect to Eudora Road via the existing 7/11 gas station and Tri-Cities Plaza driveway connections. Both of the unsignalized intersections currently have an existing northbound left turn lane, while the driveway access to the Tri-Cities Plaza also has an existing southbound right turn lane. Based on the intersection analysis, the anticipated queue length is 1 vehicle with or without the addition of the proposed restaurant. Therefore, it is anticipated that the existing exclusive turn lanes and the existing declaration lanes are sufficient to support the proposed project. No additional exclusive turn lanes and/or turn lane extensions are recommended.

6.0 Study Conclusion

This traffic impact analysis was performed to assess the transportation impacts of a proposed Freddy's Frozen Custard and Steakburgers restaurant in the City of Mt. Dora, Florida. The proposed project consists of a 3,006 square foot fast-food restaurant with drive-thru and is generally located along the west side of Eudora Road, south of U.S. 441, south of the 7/11 gas station. Access to the site will be provided via the existing 7/11 gas station and Tri-Cities Plaza driveway connections to Eudora Road, as the proposed restaurant will connect within the plaza to the neighboring parcels.

The proposed restaurant is anticipated to generate approximately 1,055 daily net new external trips and 75 PM peak hour external trips (40 enter / 35 exit). Based on the due to the nature of the development, and as outlined within the City of Mt. Dora Traffic Impact Study Guidelines, the pass-by capture for the proposed project was limited to 25% of the total trip generation. These future project trips were assigned to driveways, study intersections, and study roadways to determine project impact per the approved TIA methodology.

The study area was determined based on the City of Mt. Dora Traffic Impact Study Guidelines and approved traffic methodology. An operational analysis was performed for existing, future background, and build-out conditions.

- None of the study area segments are anticipated to exceed the service volume thresholds for the roadway, indicating that no roadway capacity projects will be needed due to the proposed development.

- Minimal intersection deficiencies were identified within the study area under future buildout (2025) conditions during the PM peak hour. The unsignalized intersection of Eudora Road at Tri-Cities Plaza driveway operates at a LOS "F" for the eastbound minor approach. Due to the anticipated low volumes of the plaza driveway, this intersection is not anticipated to meet the FDOT MUTS signal warrants to require signalization. In addition, the intersection would operate with a similar delay with or without the addition of the project.

It is recommended the applicant continue to coordinate with the City of Mt. Dora regarding the potential signalization of the Tri-Cities Plaza driveway at Eudora Road at the build-out of the project. Based on the projected volumes at this intersection, it is anticipated that the intersection will operate adversely with or without the project.

The proposed development will be served by two (2) existing full access driveways onto Eudora Road. Exclusive northbound left turn lanes are currently present at both driveway connections, as well as an exclusive southbound right turn lane at the plaza entrance. As a result of the intersection analysis, the anticipated queue along Eudora Road (northbound and southbound vehicles turning) is 1 vehicle, with an appropriate deceleration lane. Therefore, it is anticipated that the existing exclusive turn lanes and the existing declaration lanes are sufficient to support the proposed project. No additional exclusive turn lanes and/or turn lane extensions are recommended.

APPENDIX

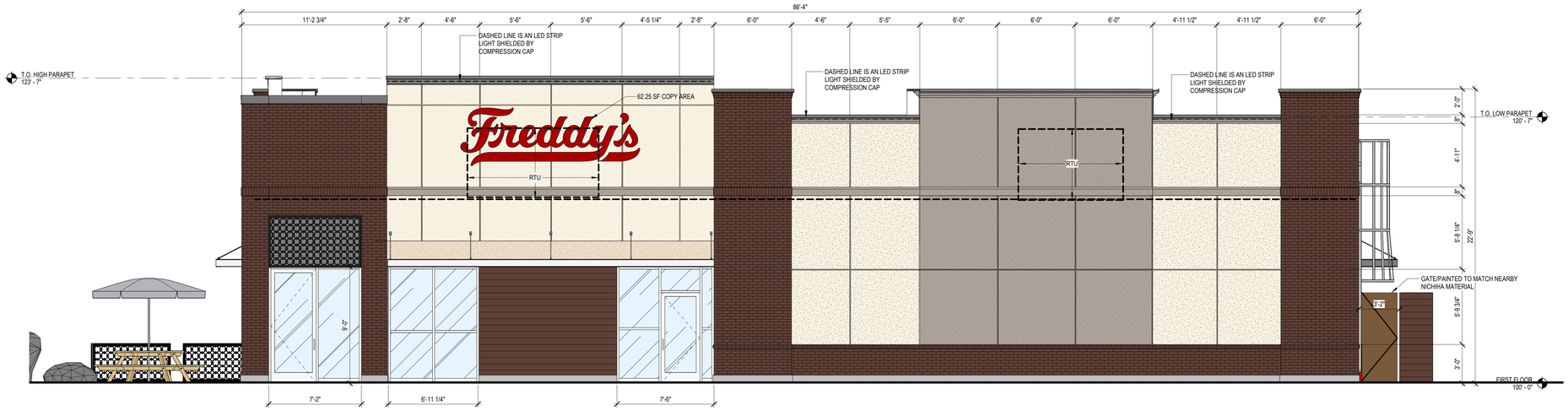

D NORTH ELEVATION

1/4" = 1'-0"

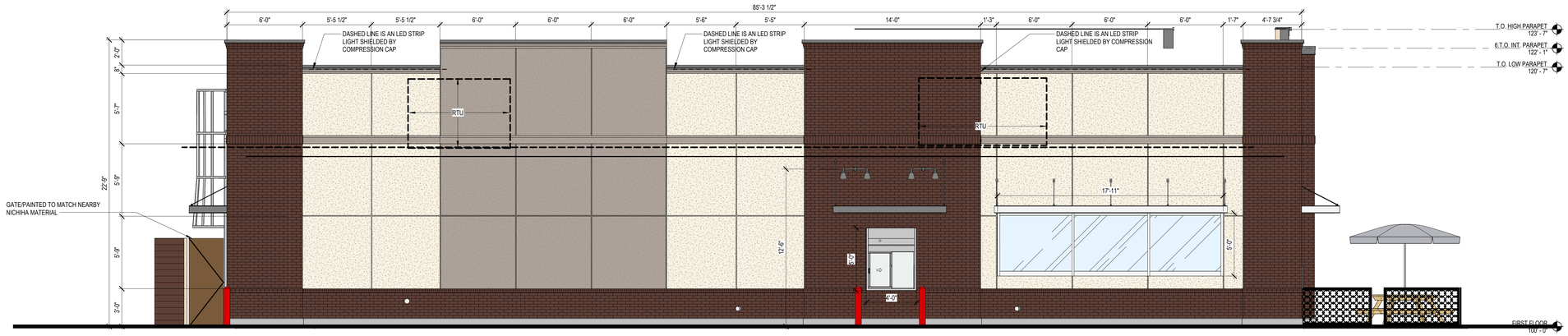

C SOUTH ELEVATION

1/4" = 1'-0"

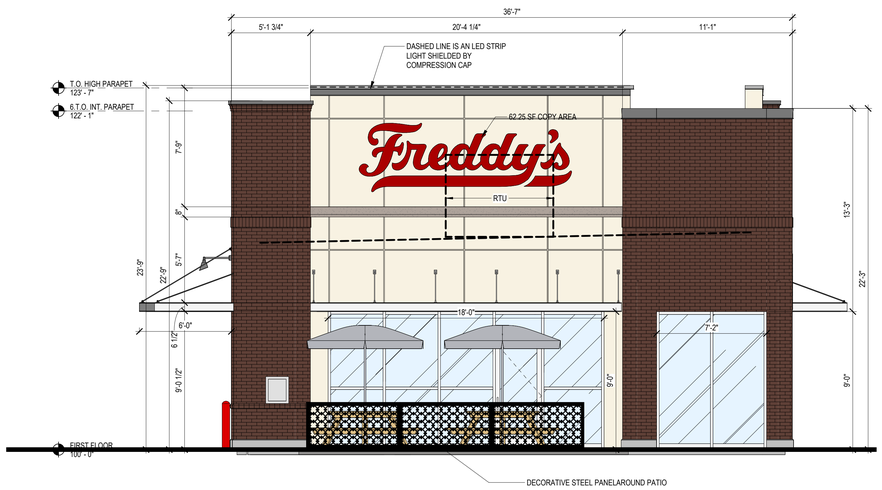

B EAST ELEVATION

1/4" = 1'-0"

FENESTRATION PERCENTAGE EAST ELEVATION

NON FENESTRATION: 608 SF

FENESTRATION: 226.5 SF

TOTAL FACADE: 634.5 SF

FENESTRATION %: **27.1%**

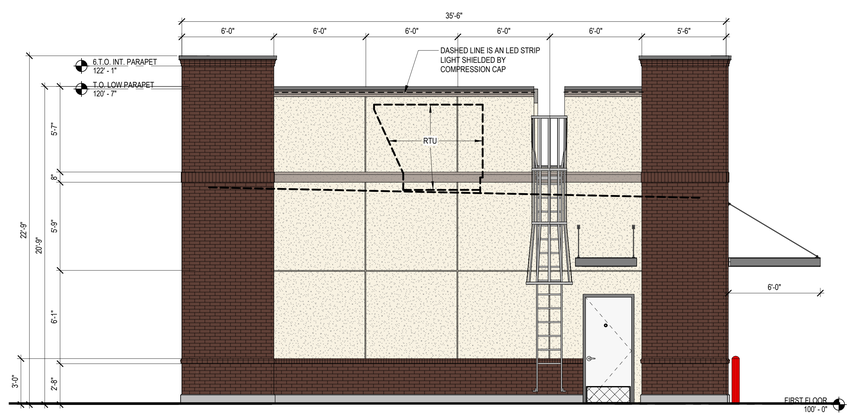

A WEST ELEVATION

1/4" = 1'-0"

Freddy's®

GLMVArchitecture

NOT FOR CONSTRUCTION

PROGRESS PRINT

DATE: 10/4/2024 1:09:39 PM

LDC SECTION 6.3.13 [1](I)(1) ARCHITECTURAL REQUIREMENTS

DESIGN ELEMENTS SELECTED:

A. CANOPIES OR PORTICOS INTEGRATED WITH THE BUILDINGS MASSING AND STYLE.

REFER TO ELEVATIONS FOR CANOPIES

B. OVERHANGS, MIN OF 3 FEET

REFER TO ELEVATIONS FOR OVERHANGS OVER 3 FEET.

E. RAISED CORNICE OR BUILDING BANDING WITH A MIN OF TWO RELIEFS.

REFER TO ELEVATIONS FOR CORNICES.

H. ORNAMENTAL AND STRUCTURAL ARCHITECTURAL DETAILS, OTHER THAN CORNICES: WHICH ARE INTEGRATED INTO THE BUILDING STRUCTURE AND OVERALL DESIGNS

REFER TO ELEVATIONS FOR ORNAMENTAL REVEALS.

J. EMPHASIZED BUILDING BASE, MIN OF THREE FEET HIGH AND MIN PROJECT FORM THE WALL OF TWO INCHES.

REFER TO ELEVATIONS FOR BRICK BASE PROJECTION 2"

MATERIAL LEGEND

DRYVIT
614 Smoke Signal

TPO ROOFING

DRYVIT
386 A Pure Cream

MARION CERAMICS
410 Gunstock Brown

VINTAGEWOOD 1818
NICHIHA WOODGRAIN

Freddy's Frozen Custard

FRONTAGE RD/EUDORA RD, US HWY 441

MOUNT DORA, FLORIDA, 32757

△	DESCRIPTION	DATE

PROJECT NO:	021232R2301
STORE NO:	XXXX
DATE:	4.25.2024
DRAWN BY:	JHC
CHECKED BY:	DLW

ELEVATIONS

CP-300

FILE PATH: Autodesk Docs://2023/R2301_Freddys_MtDora/F_Freddys MtDora Florida.rvt

CONSTRUCTION PLANS

LOCATION
23-19-26-0004-000-10700
Section 23, Township 19S, Range 26E
2495 EUDORA ROAD
MOUNT DORA, FL 32757

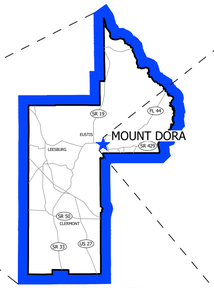

VICINITY MAP

PREPARED FOR OWNER/DEVELOPER

EUDORA ROAD, LLC
32750 LAKESHORE DR.
TAVARES, FL 32778

PREPARED BY

SLOAN Engineering Group

150 SOUTH WOODLAWN AVENUE, BARTOW, FL 33830 PHONE: (863) 800-3046 FAX: (863) 800-1159
FLORIDA CERTIFICATE OF AUTHORIZATION (FLCA) #26247

UTILITY SERVICE PROVIDERS:

WATER
CITY OF MOUNT DORA
JOSHUA KRAMM
900 NORTH DONNELLY STREET
MOUNT DORA, FLORIDA 32757
(352) 735-7151

GAS:
TECO PEOPLES GAS - EUSTIS
JOAN DOMNING
8416 PALM RIVER RD
TAMPA, FL 33619
813-275-3783

COMMUNICATION:
CENTURYLINK
BILL McCLOUD
1325 BLAIRSTONE RD RM 113
TALLAHASSEE, FL 32301
850-599-1444

WASTEWATER
CITY OF MOUNT DORA
JOSHUA KRAMM
900 NORTH DONNELLY STREET
MOUNT DORA, FLORIDA 32757
(352) 735-7151

COMMUNICATION:
COMCAST CABLE
ANDREW SWEENEY
5934 RICHARD ST
JACKSONVILLE, FL 32216
904-738-6898

ELECTRIC:
DUKE ENERGY
MARK HURST
1150 GREENWOOD BLVD
LAKE MARY, FL 32746
407-905-3321

COMMUNICATION:
SUMMIT BROADBAND
MICHELLE DANIEL
4558 SW 35TH ST
ORLANDO, FL 32811
407-996-1183

Sunshine 811

SHEET INDEX

#	SHEET TITLE	REV #	REV DATE
C100	COVER SHEET	1	11/21/2024
C101	NOTES & SPECIFICATIONS	1	11/21/2024
C200	DEMOLITION & SWPP PLAN	1	11/21/2024
C300	SITE PLAN	1	11/21/2024
C301	TURNING RADIUS ANALYSIS PLAN	1	11/21/2024
C302	TURNING RADIUS ANALYSIS PLAN	1	11/21/2024
C400	GRADING & DRAINAGE PLAN	1	11/21/2024
C401	GRADING PLAN	1	11/21/2024
C402	TREE PROTECTION - SITE / GRADING PLAN	1	11/21/2024
C500	UTILITY PLAN	1	11/21/2024
C501	LIGHTING PLAN	1	11/21/2024
C502	LIGHTING POLE & FIXTURE DETAILS	1	11/21/2024
C600	CROSS SECTIONS	1	11/21/2024
C700	SITE DETAILS	1	11/21/2024
C701	TRASH ENCLOSURE DETAILS	1	11/21/2024
C702	CONTECH UNDERGROUND EXFILTRATION DETAILS	1	11/21/2024
C703	CITY DETAILS	1	11/21/2024
C704	CITY DETAILS	1	11/21/2024
C705	CITY DETAILS	1	11/21/2024

SUBMITTAL HISTORY

No.	DATE	DESCRIPTION
1	07/30/2024	INITIAL SUBMITTAL TO THE CITY OF MOUNT DORA & SJRWMD
2	11/21/2024	2nd SUBMITTAL TO THE CITY OF MOUNT DORA & SJRWMD

REVISION HISTORY

No.	DATE	DESCRIPTION
1	11/21/2024	REVISED PER SJRWMD & CITY OF MOUNT DORA COMMENTS

REVISION BLOCK

NO.	DATE	DESCRIPTION
1	11/21/2024	REVISED PER SJRWMD & CITY OF MOUNT DORA COMMENTS

SANTOS MEDINA, III, P.E.
STATE OF FLORIDA
PROFESSIONAL ENGINEER
LICENSE NO. 74359
11/21/2024
NOT VALID WITHOUT THE SIGNATURE AND ORIGINAL RAISED SEAL OF A FLORIDA LICENSED ENGINEER.
THIS ITEM HAS BEEN DIGITALLY SIGNED AND SEALED

DESIGNED BY: SM
DRAWN BY: DH
CHECKED BY: SM

SLOAN Engineering Group
150 SOUTH WOODLAWN AVENUE, BARTOW, FL 33830
PHONE: (863) 800-3046 - FAX: (863) 800-1159
FLORIDA CERTIFICATE OF AUTHORIZATION (FLCA) #26247

CLIENT: EUDORA ROAD, LLC
PROJECT: FREDDY'S FROZEN CUSTARD - MOUNT DORA

COVER SHEET

2495 EUDORA RD, MT DORA, FLORIDA 32757

PROJECT NO.	SHEET
2575	C100

X:\Engineering\2575-FFC of Central Florida-Freddy's Frozen Custard-Mt Dora\cad\2575 Base.dwg, C100-Cover Sheet, 11/21/2024 8:49:47 AM, dharper, 1:1

ASBUILT/RECORD DRAWING NOTES FOR CONTRACTOR

ALL ASBUILT/RECORD DRAWING INFORMATION SHALL BE PROVIDED FROM A LICENSED PROFESSIONAL LAND SURVEYOR IN BOTH HARD COPY SIGNED & SEALED PRINTS AND DIGITAL FORMAT. THE AS-BUILTS WILL BE SIGNED BY A FLORIDA LICENSED SURVEYOR. ALL DATA SHALL BE ON THE SAME BENCHMARK AS THE DESIGN PLANS AND IN THE STATE PLANE COORDINATE SYSTEM. DIGITAL COPIES OF THE CONSTRUCTION PLANS WILL BE PROVIDED FOR A BASIS OF THE ASBUILT/RECORD DRAWINGS. THE FOLLOWING IS A LIST OF ITEMS TO BE PROVIDED TO THE ENGINEER FOR REVIEW BEFORE FINAL CERTIFICATIONS CAN BE ISSUED. THIS LIST, WHILE EXHAUSTIVE, IS NOT MEANT TO BE ALL-INCLUSIVE. PLEASE USE IT AS A GUIDELINE FOR MINIMUM STANDARDS. ALL DATA PROVIDED SHALL ALSO MEET MINIMUM STANDARDS OF THE UTILITY COMPANY, WATER MANAGEMENT DISTRICT, AND CITY OF MOUNT DORA AS APPLICABLE. THE AS-BUILTS NEED TO BE SENT TO THE CITY OF MOUNT DORA FOR THEIR APPROVAL IN ADDITION TO THE ENGINEER.

GENERAL:

1. AUTOCAD POINTS WITH DESCRIPTIONS TO BE PROVIDED ON A LOGICAL LAYERING SYSTEM.
2. ALL ITEMS IDENTIFIED ON THE SITE PLAN SHOULD BE SHOWN ON THE ASBUILT/RECORD DRAWING UNLESS OTHERWISE DIRECTED BY THE ENGINEER. THIS INCLUDES ITEMS SUCH AS LIGHT POLES, BIKE RACKS, CURBING, SIDEWALKS, FENCING, UTILITY PADS, ETC.
3. VERTICAL AND HORIZONTAL SEPARATION BETWEEN MAINS SHALL BE DIMENSIONED ON THE ASBUILT/RECORD DRAWING. AT A MINIMUM, SEPARATION DIMENSIONS SHALL BE ADDED IN LOCATIONS WHERE IDENTIFIED ON THE CONSTRUCTION PLANS TO SHOW THE ITEMS WERE CONSTRUCTED PER APPLICABLE STANDARDS.
4. ANY CONFLICT SEPARATIONS LESS THAN THOSE ALLOWABLE ARE TO BE SPECIFICALLY NOTED AND DIMENSIONED.

UTILITIES:

1. SHOW HORIZONTAL AND VERTICAL LOCATION OF ALL UNDERGROUND AND ABOVE GROUND POTABLE WATER, RECLAIM WATER, AND WASTEWATER PIPING AND RELATED APPURTENANCES. THIS INCLUDES BENDS, VALVES, HYDRANTS, BLOW-OFFS, MANHOLES, CLEANOUTS, SERVICES, ETC AS SHOWN ON THE CONSTRUCTION PLANS.
2. IDENTIFY INSTALLED STRUCTURES, PIPE MATERIAL, SIZE, AND SLOPE (IF GRAVITY PIPE). PIPE LENGTH AND PIPE INVERTS TO BE IDENTIFIED FOR THE GRAVITY MAINS. ASBUILT DATA SHOULD BE PROVIDED ADJACENT TO DESIGN DATA AND IN THE SAME FORMAT AS THE DESIGN.
3. TOP OF PRESSURE PIPE TO BE SHOWN AT INTERVALS NOT TO EXCEED 100 FEET.
4. ASBUILT/RECORD DRAWING LIFT STATION DATA TO BE PROVIDED AT ALL ELEVATIONS AND DIMENSIONS SHOWN ON THE DESIGN PLANS.
5. ~~LABEL SAMPLE POINT LOCATIONS.~~
6. ALL CONFLICT CROSSINGS NEED TO BE SHOWN ON THE AS-BUILTS.

DRAINAGE & GRADING:

1. CONTROL STRUCTURE DATA INCLUDING GRATE ELEVATION, WEIR INVERT, TOP OF WIER ELEVATION, DIMENSIONS, AND PIPE SIZE/INVERT SHOWN ON THE CONTROL STRUCTURE DETAIL.
2. POND AND SWALE TOP AND TOE OF SLOPE ELEVATIONS AT INTERVALS NOT TO EXCEED 100 FEET OR CHANGE IN DIRECTION. VISIBLY LOW OR HIGH AREAS SHOULD ALSO BE DETAILED. SUFFICIENT SPOT GRADES SHOULD BE PROVIDED SO THAT THE POND OR SWALE CAN BE RECREATED DIGITALLY AS IT IS CONSTRUCTED FOR THE ENGINEER TO DETERMINE COMPLIANCE WITH THE DESIGN.
3. DRAINAGE STRUCTURE AND PIPE ASBUILT DATA SHOULD BE PROVIDED ADJACENT TO DESIGN DATA AND IN THE SAME FORMAT AS THE DESIGN.
4. SUFFICIENT SPOT ELEVATIONS ON ALL FOUR CORNERS OF THE ADA SPACES TO CONFIRM THE SLOPES.
5. SUFFICIENT PAVEMENT GRADES, TYPICALLY AT INTERVALS NOT TO EXCEED 100 FEET OR CHANGE IN DIRECTION OR SLOPE.

DATUM

1. UNLESS OTHERWISE NOTED, ELEVATIONS IN THIS PLAN SET ARE BASED ON D.O.T. BENCHMARK #BM-290, AKA LAKE COUNTY BM #HB110038. A CONCRETE MONUMENT ON THE NORTH SIDE OF SR 441, IN ORANGE GROVE, ACROSS FROM PET SUPERMARKET. ELEVATION=103.166 FEET, NGVD 1929 DATUM. ELEVATIONS HAVE BEEN COVERTED TO NAVD 1988 DATUM, USING VERTCON CONVERSION OF -0.932'." AS SHOWN ON BOUNDARY & TOPOGRAPHIC SURVEY BY SHANNON SURVEYING INC. DATED 08-08-2022.

DRAINAGE STRUCTURES

1. ALL DRAINAGE STRUCTURE SHALL CONFORM TO THE LATEST FDOT STANDARD PLANS UNLESS OTHERWISE NOTED.
2. GRATE ELEVATIONS FOR ALL TYPE 5 AND TYPE 6 INLETS REFER TO EDGE OF PAVEMENT.
3. GRATE ELEVATIONS FOR ALL DITCH BOTTOM INLETS REFER TO THE FLOW LINE OF PAVEMENT.

SEQUENCE OF ACTIVITIES

1. INSTALLATION OF CONSTRUCTION ENTRANCE DRIVE.
2. INSTALL SILT BARRIERS & TREE BARRICADES AS SHOWN ON PLANS AS APPLICABLE.
3. STORMWATER RUNOFF DURING CONSTRUCTION SHALL BE ACCOMMODATED BY A TEMPORARY DEWATERING SETTLING AREA WHICH WILL ACT AS A SEDIMENTATION BASIN. ROUGH GRADE TEMPORARY SWALES TO FORCE DELIVERY OF RUNOFF TO EXCAVATED TEMPORARY DEWATERING SETTLING AREA.
4. STABILIZE CLEARED AREAS WITHIN 7 DAYS OF LAST DISTURBANCE IF RUNOFF IS NOT CAPTURED BY THE STORMWATER POND.
5. INSTALL THE UNDERGROUND EXFILTRATION SYSTEM, STORM SEWER CONVEYANCE SYSTEMS, UTILITIES, AND BUILDINGS.
6. CONSTRUCT ENTRANCE(S) AND PAVEMENT.
7. COMPLETE GRADING AND INSTALL PERMANENT SODDING OR OTHER PERMANENT STABILIZATION FEATURES.
8. WHEN ALL CONSTRUCTION IS COMPLETE, STABILIZE ANY REMAINING DISTURBED AREAS.
9. REMOVE INSTALLED SILT BARRIERS AFTER ALL DISTURBED AREAS ARE STABILIZED.

BACKFILL, COMPACTION, AND INSPECTION NOTES

1. IT IS RECOMMENDED THE CONTRACTOR SUBMIT A TESTING PLAN TO THE ENGINEER BEFORE COMMENCING CONSTRUCTION SO ANY DEFICIENCIES CAN BE DETERMINED BEFORE STARTING.
2. PROCTOR TESTS SHALL BE PERFORMED ON ALL MATERIAL TO BE USED AS BACKFILL. TESTING FREQUENCY SHALL BE PER FDOT SPECIFICATIONS SECTION 125-9, MINIMUM 1 TEST PER SOIL TYPE OR REPRESENTATIVE SAMPLE.
3. ALL PIPE SHALL BE CAREFULLY LAID, TRUE TO THE LINES AND GRADES AS SHOWN ON THE PLANS. ALL PIPE SHALL BE LAID IN DRY BEDDING CONDITIONS.
4. BACKFILLING SHALL PROGRESS AS RAPIDLY AS THE CONSTRUCTION AND TESTING OF THE WORK WILL PERMIT. ALL BACKFILL MATERIAL SHALL BE SUITABLE AND FREE OF DELETERIOUS MATERIAL.
5. MATERIAL NOT SUITABLE FOR BACKFILL INCLUDES MUCK, ROCK, CLAY, PHOSPHATE SLIMES, OR OTHER PLASTIC MATERIALS INCLUDING A-2-6, A-2-7, A-5, A-6, AND A-7. NOTE: A-7 MAY BE USED AS SPECIFIED IN FDOT SPECIFICATIONS SECTION 125-8. THESE SOILS, IF ENCOUNTERED DURING SITE PREPARATION, SHOULD BE REMOVED WITHIN A 6' MARGIN OF THE CONSTRUCTION AREA AND FDOT #57 AGGREGATE BEDDING MATERIAL SHALL BE PLACED UNDER THE PIPE IN ACCORDANCE WITH THE TYPE A BEDDING DETAIL.
6. THE INITIAL BACKFILL SHALL BE CAREFULLY DEPOSITED ON BOTH SIDES OF THE PIPE AT THE SAME TIME AND UNIFORMLY COMPACTED AROUND THE BARREL OF THE PIPE UNTIL ENOUGH HAS BEEN PLACED TO PROVIDE A COVER OF 12" ABOVE THE CROWN OF THE PIPE. IN NO CASE SHALL BACKFILL MATERIAL BE PLACED IN THE TRENCH IN A MANNER THAT WILL CAUSE SHOCK TO OR UNEQUAL PRESSURE ON THE PIPE.
7. INITIAL LIFTS OF 6" SHALL BE PLACED UP TO THE TOP OF PIPE. LIFT MAY CONTINUE AT 12" INTERVALS THEREAFTER IF COMPACTION REQUIREMENTS CAN BE ACHIEVED.
8. IN AREAS WITHIN 6' OF ANY PAVED SURFACE, BACKFILL SHALL BE COMPACTED TO 100% OF AASHTO T-99. IN ALL OTHER AREAS, BACKFILL SHALL BE COMPACTED TO 95% OF AASHTO T-180.
9. EXCAVATABLE FLOWABLE FILL IS ACCEPTABLE.
10. BACKFILL AROUND STRUCTURES SHALL BE COMPACTED TO 100% OF AASHTO T-99.
11. COMPACTION TESTS SHALL BE IN ACCORDANCE WITH SECTION 125-8 OF THE FDOT STANDARD SPECIFICATIONS FOR ROAD AND BRIDGE CONSTRUCTION, LATEST EDITION. THE CITY OF MOUNT DORA MAY DETERMINE IF MORE COMPACTION TESTS ARE REQUIRED. THE LOCATIONS OF COMPACTION TESTS WITHIN THE TRENCH SHALL BE IN CONFORMANCE WITH THE FOLLOWING SCHEDULE:
    - 11.1. CROSS DRAIN CULVERTS SHALL HAVE A MINIMUM OF TWO DENSITY TESTS PER LIFT.
    - 11.2. ONE TEST AT THE SPRING LINE OF THE PIPE.
    - 11.3. AT LEAST ONE TEST FOR EACH 12-INCH LAYER OF BACKFILL WITHIN THE PIPE BEDDING ZONE FOR PIPES 24 INCHES AND LARGER.
    - 11.4. ONE TEST AT AN ELEVATION OF ONE FOOT ABOVE THE TOP OF THE PIPE.
    - 11.5. ONE TEST FOR EACH TWO FEET OF BACKFILL PLACED FROM ONE FOOT ABOVE THE TOP OF THE PIPE TO FINISHED GRADE ELEVATION.
    - 11.6. TESTS SHALL BE STAGGERED AROUND EACH MANHOLE AND LIFT STATION'S WET WELL AND VALVE VAULT WITHIN THREE FEET OF EACH STRUCTURE'S OUTSIDE PERIMETER IN ACCORDANCE WITH THE FOLLOWING SCHEDULE:
        - 11.6.1. FIRST TEST SHALL BE ONE FOOT ABOVE THE STRUCTURE BASE; AND
        - 11.6.2. SECOND TEST SHALL BE TWO FEET ABOVE FIRST TEST
        - 11.6.3. SUBSEQUENT TESTS SHALL BE EVERY TWO FEET UP TO FINISHED SUBGRADE.
    - 11.7. ONE TEST UNDER THE CENTER OF EACH LIFT STATION WET WELL BASE. COMPACTION SHALL HAVE A MINIMUM DENSITY OF 100 PERCENT OF THE MAXIMUM DRY DENSITY AS DETERMINED BY AASHTO T-99.
12. CONTRACTOR TO INSPECT ALL STORM PIPES AND GRAVITY SANITARY SEWER MAINS UTILIZING A CLOSED CIRCUIT TELEVISION SYSTEM PREPARING A DVD OF THE RESULTS. THE VIDEO WILL NEED TO GO TO BOTH THE CITY OF MOUNT DORA AND THE ENGINEER OF RECORD. THE CITY OF MOUNT DORA AND THE ENGINEER OF RECORD SHALL DETERMINE THE CONDITION OF THE PIPE FOR ACCEPTABILITY. VIDEO SHALL EXTEND TO THE END OF ALL PIPES.

STORMWATER POLLUTION PREVENTION NOTES

A NATIONAL POLLUTANT DISCHARGE ELIMINATION SYSTEM (NPDES) PERMIT IS REQUIRED BEFORE ANY EARTHMOVING ACTIVITIES COMMENCE. THE CONTRACTOR OR THEIR ASSIGNS SHALL BE THE RESPONSIBLE AUTHORITY FOR IMPLEMENTING THE SWPP. EACH PERSON MUST SIGN A CERTIFICATION TO CERTIFY THAT THEY UNDERSTAND AND SHALL COMPLY WITH THE TERMS AND CONDITIONS OF THE FLORIDA DEPARTMENT OF ENVIRONMENTAL PROTECTION GENERIC PERMIT FOR STORM WATER DISCHARGE FROM LARGE AND SMALL CONSTRUCTION ACTIVITIES AND THIS STORM WATER POLLUTION PREVENTION PLAN. SWPPP AND ITS IMPLEMENTATION AND MAINTENANCE SHALL BE IN ACCORDANCE WITH THE REQUIREMENTS ON FDEP, SJRWMD AND THE CITY OF MOUNT DORA.

GENERAL POLLUTION CONTROL NOTES

1. THE CONTRACTOR SHALL APPLY FOR AND OBTAIN A NOTICE OF INTENT FROM FDEP AND SHALL PREPARE A SWPPP FOR THE CITY OF MOUNT DORA TO REVIEW AND APPROVE PRIOR TO MOBILIZING TO THE SITE.
2. PRIOR TO ANY CLEARING OR CONSTRUCTION COMMENCEMENT, SILT FENCES SHALL BE INSTALLED IN THE AREAS DESIGNATED ON THIS PLAN. THOSE AREAS DESIGNATED TO BE REINFORCED SHALL HAVE INSTALLED A SECOND ROW OF SILT FENCE. THE SILT FENCE SHALL BE TRENCHED IN 4 INCHES DEEP AND BACKFILLED ON THE UPHILL SIDE.
3. AFTER SILT FENCES ARE INSTALLED, A ROCK CONSTRUCTION ENTRANCE 50 FEET LONG AND 10 FEET WIDE WITH 6 INCH DEEP FDOT #57 STONE LINED WITH FILTER FABRIC SHALL BE CONSTRUCTED AT EACH CONSTRUCTION ENTRANCE SHOWN ON THIS PLAN.
4. ALL CONSTRUCTION MATERIALS AND DEBRIS WILL BE PLACED IN A DUMPSTER AND HAULED OFF SITE TO A LANDFILL OR OTHER PROPER DISPOSAL SITE. THE DUMPSTER SHALL BE LOCATED IN DESIGNATED LOCATION SHOWN ON THIS PLAN.
5. DUST SHALL BE CONTROLLED WITH THE USE OF WATER IF NECESSARY.
6. ALL TOXIC MATERIALS USED IN CONSTRUCTION SHALL BE KEPT IN A COVERED SHED AS SHOWN IN DESIGNATED LOCATION SHOWN ON THIS PLAN.
7. A DOUBLE WALL FUEL TANK WILL BE PLACED ON A DRIP PAN TO CONTAIN AND PREVENT ANY FUEL LEAKS FROM BEING DISCHARGED IN STORM WATER RUNOFF.
8. PORT-O-LETS SHALL BE PLACED IN AREAS DESIGNATED ON THIS SITE PLAN.
9. NO VEHICLE MAINTENANCE WILL BE ALLOWED ON SITE.
10. A WASHDOWN SITE SHALL BE PLACED IN THE AREAS DESIGNATED. A SMALL VEGETATIVE BERM SHALL BE PLACED AROUND THE WASH DOWN AREA.
11. FILTER SOCKS SHALL BE PLACED AT THE ENTRANCE TO ALL EXISTING INLETS TO PREVENT THE STORM SEWER SYSTEM FROM DISCHARING SEDIMENTS INTO THE RETENTION PONDS.
12. CONTRACTOR TO DEMO TREES AS REQUIRED TO ACCOMMODATE PROPOSED SITE DESIGN (REMOVE ROOT BASE OF ALL EXISTING TREES TO BE DEMOLISHED). THE SITE WILL NEED A TREE REMOVAL PERMIT FROM THE CITY OF MOUNT DORA PRIOR TO ANY TREE REMOVAL.
13. NO BURNING IS ALLOWED ON SITE. ALL CLEARED TREES AND VEGETATION SHALL BE HAULED AWAY.
14. SEDIMENTS MAY NOT BE ALLOWED TO ACCUMULATE MORE THAN ONE FORTH THE HEIGHT OF THE SILT FENCE. SEDIMENTS MUST BE PROPERLY DISPOSED OF. AFTER REMOVAL OF SILT FENCES, ALL DISTURBED AREAS SHALL BE GRASSED & MULCHED.
15. THE UNDERGROUND EXFILTRATION SYSTEM & BASIN CONTROL SHALL BE THE FIRST ITEMS CONSTRUCTED.
16. OUTLETS OF ALL PIPES SHALL BE INSPECTED REGULARLY AND ANY BLOCKAGES REMOVED. ALL FLOW MUST BE MAINTAINED WITH ANY FENCING CONSTRUCTED TO ALLOW FLOW THROUGH OR UNDER THE FENCE.
17. DEWATERING MAY BE REQUIRED FOR INSTALLATION OF UTILITIES, STORM SEWER, OR PAVEMENT. THE DURATION IS DEPENDANT ON THE SCHEDULE OF CONSTRUCTION. THE DEWATERING DISCHARGE WILL BE CONTAINED WITHIN A SETTLING AREA AS IDENTIFIED ON SHEET C200. THE SETTLING AREAS WILL BE SURROUNDED WITH TURBIDITY BARRIERS IN ACCORDANCE WITH FDOT INDEX 102 & 103. AFTER DEWATERING WORK HAS BEEN COMPLETED, THE SETTLING AREAS WILL BE EXCAVATED AND/OR RESHAPED TO FINALIZE THE GRADING. DEWATERING STRUCTURES SHALL REMAIN IN PLACE UNTIL TRENCHING HAS BEEN COMPLETED. ALL DISCHARGE SHALL BE CONTAINED WITHIN THE PROJECT AREA AS DESCRIBED. NO GROUNDWATER SHALL BE PUMPED DIRECTLY OFFSITE
18. DURING CLEARING AND GRUBBING AND SITE GRADING STAGES, AREAS THAT ARE DISTURBED AND INACTIVE FOR MORE THAN 7 DAYS SHALL BE STABILIZED WITH RYE GRASS APPLIED AT MANUFACTURERS RECOMMENDATIONS. AFTER SEEDING EACH AREA SHALL BE MULCHED WITH 4000 POUNDS OF STRAW PER ACRE.

MAINTENANCE PLAN DURING CONSTRUCTION

1. SILT FENCE REPAIRS SHALL BE MADE IMMEDIATELY.
2. MAINTENANCE SHALL BE PERFORMED ON THE CONSTRUCTION ENTRANCE WHEN ANY VOID SPACES ARE FULL OF SEDIMENT.
3. MULCH AND SOD THAT HAS WASHED OUT SHALL BE REPLACED IMMEDIATELY. ALL OTHER AREAS ARE TO BE SEEDED UNTIL VEGETATION IS ESTABLISHED.
4. INSPECTIONS SHALL BE PERFORMED AT LEAST ONCE A WEEK AND WITHIN 24 HOURS OF THE END OF A RAIN EVENT THAT IS 0.5 INCHES OR GREATER
5. THE INSPECTOR SHALL INSPECT ALL POINTS OF DISCHARGE, ALL DISTURBED AREAS OF CONSTRUCTION THAT HAVE NOT BEEN STABILIZED, AREAS WHERE VEHICLES ENTER AND EXIT THE SITE, AND SEDIMENT CONTROL STRUCTURES.
6. THE INSPECTOR SHALL FURNISH A STORM WATER POLLUTION PREVENTION PLAN INSPECTION REPORT FORM IN THE FORMAT DESCRIBED IN THE "SAMPLE COPY OF THE STORM WATER POLLUTION PREVENTION PLAN" AS OUTLINED ON THE FLORIDA DEPARTMENT OF ENVIRONMENTAL PROTECTION WEBSITE.

MAINTENANCE PLAN AFTER CONSTRUCTION

THE STORMWATER FACILITY MUST BE MAINTAINED CORRECTLY IF IT IS TO PERFORM IN THE MANNER IT WAS DESIGNED. THE STATEMENTS BELOW ARE INTENDED TO BE A GUIDE TO THE CORRECT WAYS TO MAINTAIN THIS FACILITY. THIS IS ONLY A GUIDE AND SHOULD BE REVISED AS FIELD CONDITIONS REQUIRE. THE MAINTENANCE ENTITY SHALL BE RESPONSIBLE FOR MAINTAINING THE SITE. FACILITIES SHALL BE INSPECTED BY A PROFESSIONAL ENGINEER AT INTERVALS OUTLINED IN THE ENVIRONMENTAL RESOURCE PERMIT.

1. ALL STORMWATER PIPES, INLETS, CATCH BASINS, MANHOLES, FLUMES, POND INFLOW AND OUTFALL STRUCTURES (INCLUDING OIL SKIMMERS), AND DISCHARGE PIPES SHOULD BE INSPECTED ON A REGULAR BASIS (MONTHLY OR QUARTERLY) AND AFTER MAJOR RAINFALLS. THEY SHOULD BE MAINTAINED BY REMOVING BUILT- UP DEBRIS AND VEGETATION AND REPAIRING DETERIORATING STRUCTURES.
2. MOW GRASS (WEEKLY DURING THE SUMMER MONTHS AND BI-WEEKLY DURING THE REMAINDER OF THE YEAR) WITHIN THE STORMWATER RETENTION AREAS. GRASS CLIPPINGS SHALL BE COLLECTED AND PROPERLY DISPOSED OF.
3. CHEMICALS, OILS, GREASES OR SIMILAR WASTES ARE NOT TO BE DISPOSED OF DIRECTLY TO THE STORMWATER FACILITY OR THROUGH STORM SEWERS. TREATMENT PONDS ARE DESIGNED TO TREAT NORMAL ROAD, PARKING LOT, ROOF AND YARD RUNOFF ONLY. SOME CHEMICALS MAY INTERFERE WITH A TREATMENT POND'S FUNCTIONS OR KILL VEGETATION AND WILDLIFE. DISPOSE OF THESE POTENTIALLY DANGEROUS MATERIALS PROPERLY BY TAKING THEM TO RECYCLING FACILITIES OR TO COLLECTION LOCATIONS SPONSORED BY MANY LOCAL GOVERNMENTS. ALSO, DO NOT DISPOSE OF GRASS CLIPPINGS IN A SWMS. GRASS CLIPPINGS POSE PROBLEMS BY SMOTHERING DESIRABLE VEGETATION, CLOGGING OUTFALL STRUCTURES AND, WHEN THEY DECOMPOSE, MAY CAUSE UNSIGHTLY ALGAE BLOOMS THAT CAN KILL FISH.
4. ACCUMULATED POND SEDIMENTS MAY CONTAIN HEAVY METALS SUCH AS LEAD, CADMIUM AND MERCURY, AS WELL AS OTHER POTENTIALLY HAZARDOUS MATERIALS. THEREFORE, SEDIMENTS REMOVED FROM STORM SEWERS, INLETS, PIPES AND PONDS SHOULD BE DISPOSED OF AT AN APPROVED FACILITY (CHECK WITH YOUR COUNTY SOLID WASTE DEPARTMENT OR THE FLORIDA DEPARTMENT OF ENVIRONMENTAL PROTECTION FOR DISPOSAL FACILITIES APPROVED TO ACCEPT TREATMENT POND SEDIMENT).
5. DURING ANY REPAIR OR MAINTENANCE ACTIVITY, USE CARE TO AVOID CAUSING EROSION OR SILTATION TRANSFER TO ADJACENT OR OFF-SITE AREAS.
6. ALTERATIONS (FILLING, ENLARGING, ETC.) OF ANY PART OF THE STORMWATER FACILITY IS NOT PERMITTED WITHOUT PRIOR APPROVAL FROM ALL APPLICABLE GOVERNING AGENCIES.
7. THE APPROVED OPERATION AND MAINTENANCE PERMIT AND AS-BUILT DRAWINGS ARE AVAILABLE AT YOUR LOCAL WATER MANAGEMENT DISTRICT SERVICE OFFICE OR FROM THE PERMITTING AGENCY HAVING JURISDICTION. REFER TO THOSE PLANS AND PERMITS FOR ADDITIONAL RESTRICTIONS, INSTRUCTIONS AND CONDITIONS.
8. IT IS USUALLY MORE COST-EFFECTIVE TO MONITOR AND PERFORM ROUTINE MAINTENANCE ON A STORMWATER MANAGEMENT SYSTEM, RATHER THAN LET IT FAIL AND HAVE TO RECONSTRUCT THE ENTIRE SYSTEM.
9. MOSQUITO GROWTH CAN BE MINIMIZED IN A STORMWATER MANAGEMENT SYSTEM, BY THE FOLLOWING MEASURES:
    - DO NOT DUMP GRASS CLIPPINGS OR OTHER ORGANIC DEBRIS INTO A SWMS
    - DECAYING GRASS CLIPPINGS AND OTHER DECOMPOSING VEGETATION CREATE IDEAL CONDITIONS FOR BREEDING MOSQUITOES.
    - CLEAN OUT ANY OBSTRUCTIONS THAT GET INTO THE SYSTEM. DEBRIS CAN OBSTRUCT FLOW AND HARBOR MOSQUITO EGGS AND LARVAE.
    - REMOVE WATER LETTUCE AND WATER HYACINTH, WHICH NOURISH AND SHELTER MOSQUITO LARVAE.

PAVING OPERATION NOTES

1. BEFORE PAVING OPERATIONS BEGIN, THE ENGINEER SHALL BE PROVIDED WITH ALL DENSITY TESTING INCLUDING PIPE BACKFILL, SUBGRADE, AND ROAD BASE. TESTING SHALL BE PROVIDED BEFORE ANY PREPAVING MEETINGS ARE SCHEDULED.
2. ASPHALT MIX DESIGNS MUST BE PROVIDED TO THE ENGINEER FOR APPROVAL PRIOR TO PAVING. MIXES MUST BE SIGNED AND SEALED BY A PROFESSIONAL ENGINEER OR SUPPLIED BY AN APPROVED FDOT PLANT.
3. ALL THE TESTS/DESIGNS/DEVIATIONS NEED TO BE SENT TO BOTH THE ENGINEER AND THE CITY OF MOUNT DORA. ANY DEVIATIONS IN ASPHALT TYPE, LIFT THICKNESS, OR COMPACTION MUST BE PRESENTED TO THE ENGINEER AND THE CITY OF MOUNT DORA FOR APPROVAL PRIOR TO IMPLEMENTATION. DEVIATIONS MAY REQUIRE APPROVAL BY THE CITY OF MOUNT DORA.
4. IT IS RECOMMENDED THE CONTRACTOR SUBMIT A TESTING PLAN TO THE ENGINEER BEFORE COMMENCING PAVING OPERATIONS SO ANY DEFICIENCIES CAN BE DETERMINED BEFORE STARTING.
5. TESTS FOR IN-PLACE DENSITY AND LAYER THICKNESS, FOR EACH COURSE, SHALL BE CONDUCTED AT A FREQUENCY OF ONE TEST PER 300 LINEAR FEET OF ROADWAY (MINIMUM 3 TESTS PER ROAD).
6. 6" PAVEMENT CORES ARE TO BE TAKEN AT A MINIMUM FREQUENCY OF 3 CORE PER 500 TONS OF ASPHALT. DENSITY, THICKNESS, AND GRADATION REPORT IS TO BE PROVIDED FOR ASPHALT, BASE, AND SUBGRADE. MINIMUM ASPHALT DENSITY SHALL BE 89% GMM, WITH A MINIMUM AVERAGE BETWEEN 3 CORES OF 92% GMM.
7. MINIMUM LIFT THICKNESS SHALL CONFORM TO FDOT SPECIFICATIONS 334-1.4.1.
8. WHEN THE DEFICIENCY IN THICKNESS IS IN EXCESS OF THE MINIMUM THICKNESS REQUIRED ON APPROVED PLANS, LESS THE ALLOWABLE CONSTRUCTION TOLERANCE, THE CONTRACTOR SHALL CORRECT THE DEFICIENCY EITHER BY REPLACING THE FULL THICKNESS FOR A LENGTH EXTENDING AT LEAST 50 FEET FROM EACH END OF THE DEFICIENT AREA, OR WHEN PERMITTED BY THE CITY OF MOUNT DORA ENGINEER BY OVERLAYING THE ENTIRE WIDTH OF THE AREA. NORMALLY AN OVERLAY WILL NOT BE PERMITTED IN A CONCRETE CURB SECTION.
9. ASPHALT SHALL BE UNIFORM IN TEXTURE AND SLOPE TO THE GREATEST EXTEND POSSIBLE. AREAS OF POOR GRADATION SHALL BE REPAIRED AT THE CONTRACTORS EXPENSE.
10. TESTS FOR SUBGRADE STABILIZATION SHALL BE LOCATED NO MORE THAN 400 FEET APART (FOR ROADWAYS) OR EVERY 8,000 SF (FOR PARKING LOTS) AND SHALL BE STAGGERED TO THE LEFT, RIGHT, AND ON THE CENTERLINE OF THE ROAD.

GENERAL SITE NOTES

1. SEE BOUNDARY & TOPOGRAPHY SURVEY FOR LEGAL DESCRIPTION & BENCHMARK INFO.
2. CONTRACTOR TO REFERENCE ARCHITECTURAL DRAWINGS FOR DETAILED DESIGN OF PROPOSED BUILDING, INCLUDING SLAB DESIGN, UTILITY CONNECTIONS, DOORWAYS, AND OTHER SITE ITEMS. GC TO NOTIFY THE CITY OF MOUNT DORA AND THE ENGINEER OF RECORD OF ANY DEVIATIONS FROM CIVIL PLANS BEFORE CONSTRUCTION.
3. ALL PAVEMENT MARKINGS SHALL BE PAINTED, UNLESS OTHERWISE NOTED, AND SHALL BE ACCOMPLISHED WITH USE OF PAINTING MACHINES AND/OR STENCILS. ALL PAINT FOR PAVEMENT MARKINGS SHALL MEET THE REQUIREMENTS OF SOLVENTBORNE APPLICATION RECOMMENDATIONS.
4. PARKING STALLS STRIPING SHALL BE 4" WIDE AND SHALL BE STRAIGHT WITH A CLEAN EDGE. ALL DIRECTIONAL ARROWS, STOP BARS, ETC SHALL CONFORM TO THE LATEST MUTCD.
5. CONTRACTOR TO SAW CUT EXISTING PAVEMENT AT PROPOSED DRIVEWAY TIE IN'S TO PROVIDE A CLEAN EDGE FOR NEW PAVEMENT AND BASE CONNECTION.
6. CONTRACTOR TO BECOME FAMILIAR WITH AND ADHERE TO ALL ADA STANDARDS.
7. CONTRACTOR TO CONSTRUCT SIDEWALKS WITH A MAXIMUM 2% CROSS SLOPE AND A MAXIMUM 5% LINEAR SLOPE UNLESS OTHERWISE SPECIFIED ON THE CONSTRUCTION DOCUMENTS. ANY SIDEWALKS CONSTRUCTED FOUND TO BE IN EXCESS OF THESE SLOPES WILL BE REQUIRED TO BE RECONSTRUCTED AT CONTRACTORS EXPENSE.
8. CONSTRUCT CROSSWALKS AND HANDICAP RAMPS AT EACH DRIVEWAY PER ADA STANDARDS.
9. CONTRACTOR TO PROVIDE SMOOTH TRANSITION AT LOCATIONS WHERE EXISTING FEATURES MEET PROPOSED FEATURES (CONCRETE, ASPHALT, ETC.).
10. ALL "MEG" (MATCH EXISTING GRADE) ELEVATIONS ON ROADWAY SURFACES OR EDGES AND UNDERGROUND STORM/UTILITY PIPES SHOWN ARE APPROXIMATE.
11. AT A MINIMUM, ALL AREAS DISTURBED DURING CONSTRUCTION SHALL BE STABILIZED WITH EITHER SOD OR SEED. SOD OR SEED AREAS SHOULD BE WATERED BY EITHER IRRIGATION OR TANKER TRUCKS UNTIL ESTABLISHED. SOD SHALL BE STAKED AS REQUIRED IN SLOPED AREAS AND MONITORED FOR WASHOUTS. ONCE THE SOD IS ESTABLISHED, GC MAY REMOVE STAKES. SEEDED AREAS MUST BE WATERED AS NECESSARY TO ALLOW GRASS TO BEGIN GROWING.
12. CONTRACTOR SHALL OBTAIN THE LATEST EDITION OF THE SOIL REPORT FOR THIS PROJECT. GC SHALL ADHERE TO ALL RECOMMENDATIONS AND INSTRUCTIONS INCLUDED IN SOIL REPORT.
13. A COPY OF THE APPROVED PERMIT AND DRAWINGS MUST BE ON THE JOBSITE AT ALL TIMES.
14. ANY SIDEWALKS DISTURBED DURING CONSTRUCTION ARE TO BE REPLACED.
15. IF CONSTRUCTION, RECONSTRUCTION, REPAIR OR MAINTENANCE ACTIVITY NECESSITATES THE CLOSING OF ONE OR MORE TRAVEL LANES OF ANY ROAD ON THE STATE PRIMARY, COUNTY ROAD OR CITY STREET SYSTEM FOR A PERIOD OF TIME EXCEEDING TWO HOURS, THE PARTY PERFORMING SUCH WORK WILL BE RESPONSIBLE TO GIVE NOTICE TO THE CITY OF MOUNT DORA AND APPROPRIATE LAW ENFORCEMENT AGENCY WHICH HAS JURISDICTION WHERE SUCH ROAD IS LOCATED PRIOR TO COMMENCING WORK ON THIS PROJECT. CITY OF MOUNT DORA AND RELEVANT LAW ENFORCEMENT AGENCY NEED TO BE CONTACTED AND GIVEN AT LEAST TWO BUSINESS DAYS OF NOTICE FOR ROAD OR LANE CLOSURES.
16. ALL TRAFFIC SIGNALS ARE TO REMAIN IN ACTUATION DURING CONSTRUCTION.
17. TRAFFIC SHALL BE MAINTAINED IN ACCORDANCE WITH THE REQUIREMENTS OF FDOT INDEX 102-600 THROUGH 102-670.
18. TRAFFIC SHALL BE MAINTAINED THROUGH THE WORK ZONE AT THE ESTABLISHED SPEED LIMIT.
19. DURING NON-WORKING HOURS, THE DROP-OFF BETWEEN THE TRAVEL LANES AND THE WORK AREA SHALL BE MAINTAINED IN ACCORDANCE WITH INDEX 102-600.
20. ROUTING TRAFFIC ONTO MILLED SURFACES IS PROHIBITED. MILLING AND RESURFACING MUST BE ACCOMPLISHED DURING NON-PEAK HOURS WITH LANE CLOSURES AND UTILIZATION OF STANDARD INDICES SUCH AS 102-603 (MODIFIED FOR APPROPRIATE POSTED SPEED), 102-606, AND/OR OTHER APPROPRIATE SPECIAL DETAILS.
21. SIDEWALKS ARE TO BE CONSTRUCTED WITH A 2' FLAT AREA ON BOTH SIDES OF THE SIDEWALK.
22. ALL MILLED SURFACES MUST BE PAVED BACK THE SAME NIGHT UNLESS OTHERWISE AUTHORIZED.
23. PROPOSED OBJECT MARKERS FOR HEADWALLS SHALL CONFORM TO THE FDOT STANDARD SPECIFICATIONS FOR ROAD AND BRIDGE CONSTRUCTION SECTIONS 705 AND 993.
24. CONTRACTOR TO RELOCATE ALL SIGNS AND DEATH MARKERS THAT ARE OUT OF COMPLIANCE DUE TO ROAD WIDENING PER FDOT INDEX 700-101.
25. ALL EXISTING MARKINGS THAT ARE IN CONFLICT WITH PROPOSED MARKINGS SHALL BE REMOVED.
26. THE PERMANENT REMOVAL OF SIGNS WITHIN THE CONSTRUCTION LIMITS ARE NOT REQUIRED UNLESS SHOWN IN THE PLANS. ALL ADJUSTMENTS SHALL BE IN ACCORDANCE WITH FDOT SPECIFICATIONS.
27. DO NOT PLACE THERMOPLASTIC STRIPES AND MARKINGS ON NEWLY CONSTRUCTED FINAL SURFACES COURSES PRIOR TO 30 CALENDAR DAYS AFTER PLACEMENT OF THE FINAL SURFACE COURSE. THE ENGINEER MAY REQUIRE LONGER CURE PERIODS. PROVIDE TEMPORARY MARKINGS IF THE ROAD IS OPEN TO TRAFFIC.
28. THE PERMITTEE IS REQUIRED TO HAVE FDOT QUALIFIED CONSTRUCTION, ENGINEERING, INSPECTION (CEI) INSPECTOR TO OVERSEE THE DAILY CONSTRUCTION ON THE FDOT RIGHT OF WAY.
29. THE LOCATIONS OF EXISTING UTILITIES SUCH AS WATER MAINS, SEWER, GAS LINES, ETC., AS SHOWN ON THE PLANS HAVE BEEN DETERMINED FROM THE BEST AVAILABLE INFORMATION, AND ARE PROVIDED FOR THE CONVENIENCE OF THE CONTRACTOR. HOWEVER, THE ENGINEER AND OWNER DO NOT ASSUME RESPONSIBILITY FOR THE SIZES AND LOCATIONS SHOWN. THE CONTRACTOR SHALL BE RESPONSIBLE FOR FIELD VERIFICATION OF THE SIZE AND LOCATION OF ALL EXISTING UTILITIES SHOWN AND NOT SHOWN ON THESE PLANS AND RELATED CONSTRUCTION PRIOR TO COMMENCEMENT OF WORK. FLORIDA LAW (F.S. 556) UNDERGROUND FACILITY DAMAGE PREVENTION AND SAFETY ACT MANDATES THAT EXCAVATORS/CONTRACTORS SHALL CONTACT SUNSHINE 811 (FKA: SUNSHINE STATE ONE-CALL OF FLORIDA) BY CALLING 800-432-4770 OR 811 AT LEAST 2 FULL BUSINESS DAYS PRIOR TO BEGINNING ANY EXCAVATION OR DEMOLITION TO ALLOW MEMBER OPERATORS AN OPPORTUNITY TO IDENTIFY AND MARK THEIR UNDERGROUND FACILITIES AND APPROPRIATELY RESPOND TO THE POSITIVE RESPONSE SYSTEM.
30. BENCHMARKS AND OTHER REFERENCE POINTS SHALL BE CAREFULLY MAINTAINED THROUGHOUT THE CONSTRUCTION PERIOD. IF DISTURBED OR DESTROYED, THESE POINTS SHALL BE REPLACED BY A FLORIDA P.L.S. AT CONTRACTOR'S EXPENSE.
31. THE CONTRACTOR IS DIRECTED TO NOTIFY SLOAN ENGINEERING GROUP, INC., PHONE (863) 800-3046, FOR PROBLEMS REQUIRING DEVIATION FROM THESE PLANS AND SPECIFICATIONS.
32. THE CONTRACTOR SHALL BE RESPONSIBLE FOR DEMOLITION AND REMOVAL OF ALL EXISTING STRUCTURES, ETC., UNLESS OTHERWISE NOTED. ALL SOIL STRIPPINGS AND ANY UNSUITABLE MATERIAL SHALL BE REMOVED FROM THE SITE AND DISPOSED OF BY THE CONTRACTOR UNLESS OTHERWISE DIRECTED BY THE OWNER.
33. THE CONTRACTOR SHALL PROTECT ALL EXISTING STRUCTURES AND UTILITIES NOTED TO REMAIN, FROM DAMAGE OR DISPLACEMENT DURING CONSTRUCTION. IN THE EVENT OBSTRUCTIONS ARE ENCOUNTERED, THE CONTRACTOR SHALL PROMPTLY NOTIFY THE ENGINEER AND THE UTILITY COMPANY. THE CONTRACTOR WILL BE RESPONSIBLE FOR ALL COSTS INCURRED TO REPAIR DAMAGE OR CORRECT DISPLACEMENT.
34. THE CONTRACTOR SHALL TAKE ALL NECESSARY MEASURES TO PROTECT ALL TREES AND OTHER VEGETATION OUTSIDE THE LIMITS OF CONSTRUCTION.
35. WHEN DETAILS ARE PROVIDED, CONTRACTOR SHALL CONSTRUCT JOB PER SPECIFIC DETAILS, AND NOT BY SCALING FROM THESE PLANS.
36. THE CONTRACTOR SHALL RESTORE OFF SITE CONSTRUCTION AREAS TO EQUAL OR BETTER CONDITION THAN EXISTED PRIOR TO COMMENCEMENT OF CONSTRUCTION. IT IS RECOMMENDED TO PROVIDE A VIDEO OF EXISTING CONDITIONS TO THE ENGINEER.
37. THE CONTRACTOR SHALL TAKE SPECIAL NOTICE THAT ALL SPECIFICATIONS AND DETAILS SHOWN HEREON ARE BELIEVED TO BE THE LATEST AND MOST ACCURATE AT THE TIME OF DESIGN AND SUBMITTAL, HOWEVER THE ENGINEER DOES NOT WARRANTY ANY OF THE PROVIDED SPECIFICATIONS AND DETAILS. THESE SPECIFICATIONS AND DETAILS ARE SUBJECT TO REVISION BY THE ISSUING MUNICIPALITIES AND AGENCIES. IT IS THE SOLE RESPONSIBILITY OF THE CONTRACTOR TO ENSURE THAT ALL CONSTRUCTION, TESTING AND MATERIALS CONFORM TO THE LATEST EDITIONS OF THE DESIGN REFERENCES INCLUDING, BUT NOT LIMITED TO THE MUNICIPAL LAND DEVELOPMENT REGULATIONS, FDOT STANDARD SPECIFICATIONS FOR ROAD AND BRIDGE CONSTRUCTION, FDOT MANUAL OF UNIFORM MINIMUM STANDARDS FOR DESIGN, CONSTRUCTION AND MAINTENANCE FOR STREETS AND HIGHWAYS (GREEN BOOK) AND THE MANUAL ON UNIFORM TRAFFIC CONTROL DEVICES FOR STREETS AND HIGHWAYS.
38. THE CONTRACTOR SHALL INSTALL DROP CURBS AND HANDICAP RAMPS AT ALL INTERSECTIONS OF THE SIDEWALK WITH THE EXISTING AND PROPOSED PAVEMENT TO A.D.A. SPECIFICATIONS. ALL SIDEWALK RAMPS SHALL HAVE DETECTABLE WARNINGS PER FDOT STANDARD PLAN INDEX 522-002 FOR THE CURB RAMP AS SPECIFIED ON THESE PLANS.
39. THE STORMWATER MANAGEMENT SYSTEM IS TO BE MAINTAINED BY THE PROPERTY OWNER.
40. SLOAN ENGINEERING WILL REVIEW AND APPROVE OR TAKE OTHER APPROPRIATE ACTION ON THE CONTRACTOR SUBMITTALS, SUCH AS SHOP DRAWINGS, PRODUCT DATA, SAMPLES, AND OTHER DATA, WHICH THE CONTRACTOR IS REQUIRED TO SUBMIT. THESE ITEMS WILL BE CHECKED FOR CONFORMANCE WITH THE DESIGN INTENT AND THE INFORMATION SHOWN IN THE CONSTRUCTION CONTRACT DOCUMENTS. CONSTRUCTION MEANS AND/OR METHODS, COORDINATION OF THE WORK WITH OTHER TRADES, AND CONSTRUCTION SAFETY PRECAUTIONS ARE THE SOLE RESPONSIBILITY OF THE CONTRACTOR. SLOAN ENGINEERING'S SHOP DRAWING REVIEW WILL BE CONDUCTED WITHIN A REASONABLE TIME WHILE ALLOWING SUFFICIENT TIME FOR ADEQUATE REVIEW. REVIEW OF A SPECIFIC ITEM SHALL NOT INDICATE THAT SLOAN ENGINEERING HAS REVIEWED THE ENTIRE ASSEMBLY OF WHICH THE ITEM IS A COMPONENT. SLOAN ENGINEERING WILL NOT BE REQUIRED TO REVIEW PARTIAL SUBMISSIONS OR THOSE FOR WHICH SUBMISSIONS OF CORRELATED ITEMS HAVE NOT BEEN RECEIVED.
41. SLOAN ENGINEERING WILL NOT BE RESPONSIBLE FOR ANY DEVIATIONS FROM THE CONSTRUCTION DOCUMENTS NOT BROUGHT TO ITS ATTENTION, IN WRITING, BY THE CONTRACTOR.
42. THE ENGINEER OF RECORD IS NOT RESPONSIBLE FOR JOB SITE SAFETY NOR HAS THE ENGINEER OF RECORD BEEN RETAINED FOR SUCH PURPOSES.
43. IT SHALL BE THE CONTRACTOR'S RESPONSIBILITY TO ARRANGE FOR OR SUPPLY TEMPORARY WATER SERVICE, SANITARY FACILITIES AND ELECTRICITY.

LAND DEVELOPMENT STANDARD NOTES

1. ALL CONSTRUCTION SHALL CONFORM TO THE REQUIREMENTS OF THE CITY OF MOUNT DORA LAND DEVELOPMENT CODE AND UTILITIES CODE, AS APPLICABLE.
2. CHANGES FROM PLANS OR SPECIFICATIONS SUBSTANTIALLY AFFECTING CONFORMANCE TO STANDARDS OR PERFORMANCE OF SYSTEMS MUST BE SUBMITTED IN A WRITTEN REQUEST BY THE ENGINEER OF RECORD AND RECEIVE WRITTEN APPROVAL BY THE CITY OF MOUNT DORA PRIOR TO THE IMPLEMENTATION OF SUCH CHANGES, UNLESS OTHERWISE PROVIDED FOR IN THE LAND DEVELOPMENT CODE OR UTILITIES CODE. MAJOR MODIFICATIONS MAY REQUIRE REVIEW AND APPROVAL BY THE DEVELOPMENT REVIEW COMMITTEE. THE CITY OF MOUNT DORA IS THE ENTITY THAT MAY GRANT VARIANCES FROM THE PLANS AND SPECIFICATIONS.
3. THE CONTRACTOR SHALL NOTIFY INSPECTIONS STAFF AT LEAST FIVE (5) WORKING DAYS PRIOR TO COMMENCEMENT OF CONSTRUCTION AND PRIOR TO ANY ACTIVITY REQUIRING INSPECTION, INCLUDING SITE PAVING.
4. TO SCHEDULE THE REQUIRED PRE-CONSTRUCTION MEETING, THE CONTRACTOR SHALL CONTACT THE CITY OF MOUNT DORA'S PLANNING AND DEVELOPMENT DIVISION.
5. AT THE COMPLETION OF CONSTRUCTION, AND PRIOR TO BENEFICIAL USE OF ANY FACILITY OR SYSTEM, AS-BUILT RECORD DRAWINGS SHALL BE SUBMITTED TO THE ENGINEER OF RECORD FOR REVIEW AND APPROVAL. ONCE REVIEWED, EOR IS TO SUBMIT RECORD DRAWINGS TO THE CITY FOR FINAL REVIEW AND APPROVAL.
6. MOT FOR THE PROJECT WILL BE IN ACCORDANCE WITH THE CURRENT FDOT TRAFFIC CONTROL REQUIREMENTS THROUGH WORK ZONES, SECTION 600, OF THE FDOT DESIGN STANDARDS. CONTRACTOR TO PROVIDE ADDITIONAL MOT PLAN IF THE CONSTRUCTION WORK CANNOT ADHERE TO TYPICAL FDOT MOT STANDARDS. ALL MOT PLANS ARE TO BE SUBMITTED TO THE CITY OF MOUNT DORA FOR REVIEW AND APPROVAL.

GENERAL POTABLE WATER AND SANITARY SEWER NOTES

1. FLORIDA LAW (F.S. 556) UNDERGROUND FACILITY DAMAGE PREVENTION AND SAFETY ACT MANDATES THAT EXCAVATORS/CONTRACTORS SHALL CONTACT SUNSHINE 811 (FKA: SUNSHINE STATE ONE-CALL OF FLORIDA) BY CALLING 800-432-4770 OR 811 AT LEAST 2 FULL BUSINESS DAYS PRIOR TO BEGINNING ANY EXCAVATION OR DEMOLITION TO ALLOW MEMBER OPERATORS AN OPPORTUNITY TO IDENTIGY AND MARK THEIR UNDERGROUND FACILITIES AND APPROPRIATELY RESPOND TO THE POSITIVE RESPONSE SYSTEM. GC TO FIELD LOCATE ALL EXISTING UTILITIES. ALL EXISTING UTILITY LOCATIONS SHOWN ARE APPROXIMATE.
2. ALL VALVES, SERVICES, FITTINGS, HYDRANTS, ETC. ARE NOT DRAWN TO SCALE BUT ARE SHOWN FOR SCHEMATIC PURPOSES ONLY. FOR PROPER INSTALLATION DETAILS SEE WATER AND SEWER DETAILS AND SPECIFICATIONS.
3. CONTRACTOR TO PERFORM ALL CONNECTIONS TO EXISTING WATER MAIN IN THE PRESENCE OF AUTHORIZED CITY OF MOUNT DORA UTILITIES DIVISION PERSONNEL.
4. BACTERIOLOGICAL SAMPLING POINTS SHALL BE TAKEN AT ALL POINTS SHOWN ON UTILITY PLANS AND ALL POINTS INDICATED ON THE FDEP PERMIT. A MINIMUM OF 1 SAMPLE SHALL BE TAKEN AT THE PROPOSED METER LOCATION.
5. THE CONTRACTOR SHALL BE RESPONSIBLE FOR CONSTRUCTING THE SEWER & WATER DISTRIBUTION SYSTEM ACCORDING TO THE ENGINEER'S DESIGN AND THE LATEST CITY OF MOUNT DORA UTILITIES SPECIFICATIONS AND PROCEDURES.
6. CONTRACTOR SHALL PROVIDE ALL VALVE, SERVICE, AND BEND LOCATIONS TO THE ENGINEER FOR AS-BUILT/RECORD DRAWINGS. AS-BUILT/RECORD DRAWINGS SHALL BE SENT TO THE CITY OF MOUNT DORA FOR REVIEW.
7. ALL PRESSURIZED MAINS SHALL BE POLY-PIGGED.
8. AS-BUILT DRAWINGS SHALL INDICATE ANY DEPARTURES FROM THE APPROVED PLANS DURING CONSTRUCTION.
9. THE CONTRACTOR SHALL NOTIFY THE CITY OF MOUNT DORA ENGINEER DIVISION AT LEAST ONE WEEK PRIOR TO CONSTRUCTION.
10. PROPOSED MANHOLES WITH INVERT SEPARATIONS OF 2.0 FEET OR GREATER WILL REQUIRE A DROP CONNECTION.
11. ALL HYDRANTS TO BE BETWEEN 5 AND 10 FEET BACK OF CURB AND 2 FEET FROM SIDEWALK. NOZZLE TO BE DIRECTED TOWARDS THE FIRE DEPARTMENT ACCESS ROAD.
12. BLUE REFLECTORS TO BE INSTALLED IN THE CENTER OF THE LANE NEAREST THE FIRE HYDRANT.
13. ALL WATER AND SEWER LINES ARE TO BE INSTALLED WITH A MINIMUM OF 3' OF COVER.
14. ALL CONSTRUCTION MATERIALS SHALL BE LISTED ON THE APPROVED MATERIALS LIST PROVIDED BY THE UTILITY COMPANY. CONTRACTOR TO ENSURE ALL PUBLICLY MAINTAINED ITEMS ARE IN ACCORDANCE WITH THE UTILITY CODE. SHOP DRAWINGS MUST BE PROVIDED TO THE CITY OF MOUNT DORA FOR ALL UTILITIES CONNECTING TO OFFSITE UTILITIES OWNED BY THE CITY OF MOUNT DORA.
15. HORIZONTAL AND VERTICAL SEPARATION BETWEEN DISSIMILAR UTILITIES ARE TO BE MAINTAINED PER THE PROVIDED SEPARATION DETAIL. WHERE POSSIBLE, THE LEAST-CONTAMINATED UTILITY SHALL BE PLACED ABOVE THE OTHERS. MINIMUM VERTICAL SEPARATION OF DISSIMILAR UTILITIES IS 12" UNLESS OTHERWISE NOTED.
16. SLOAN ENGINEERING GROUP SHALL BE NOTIFIED A MINIMUM OF 48 HOURS PRIOR TO ANY TESTING OR DISINFECTION.
17. HYDROSTATIC TESTS CONSISTING OF PRESSURE TEST AND LEAKAGE TEST SHALL BE CONDUCTED ON ALL NEWLY-INSTALLED PRESSURE PIPES AND APPURTENANCES. THE TESTS SHALL BE IN ACCORDANCE WITH PROVISIONS OF AWWA C600 OR M23 AS APPLICABLE. ADDITIONAL TESTING STANDARDS BY THE UTILITY COMPANY MAY BE REQUIRED.
18. DISINFECTION OF THE WATER DISTRIBUTION SYSTEM SHALL BE PERFORMED IN ACCORDANCE WITH AWWA C651-DISINFECTING WATER MAIN.
19. ROOF DRAINS, FOUNDATION DRAINS OR OTHER STORM WATER CONNECTIONS TO THE SANITARY SEWER ARE PROHIBITED.
20. WHERE THE SOILS REPORT INDICATES THE POSSIBILITY OF UNSUITABLE MATERIAL IN THE VICINITY OF UTILITY LINES, THE CONTRACTOR SHALL DETERMINE THE NATURE AND EXTENT OF THIS UNSUITABLE MATERIAL, PREPARE TRENCH AND INSTALL THE UTILITY LINES IN ACCORDANCE WITH ASTM D-2321. IT WILL BE THE CONTRACTOR'S RESPONSIBILITY TO NOTIFY THE ENGINEER OF THIS UNSUITABLE MATERIAL.
21. FOR PURPOSES OF BACKFILLING TRENCHES: COMMON FILL SHALL CONSIST OF MINERAL SOIL, SUBSTANTIALLY FREE OF CLAY, ORGANIC MATERIAL, MUCK, LOAM, WOOD, TRASH AND OTHER OBJECTIONABLE MATERIAL WHICH MAY BE COMPRESSIBLE OR WHICH CANNOT BE COMPACTED PROPERLY. COMMON FILL SHALL NOT CONTAIN STONES LARGER 3-1/2 INCHES IN ANY DIMENSION IN THE TOP 12 INCHES OR SIX INCHES IN ANY DIMENSION IN THE BALANCE OF FILL AREA. COMMON FILL SHALL NOT CONTAIN ASPHALT, BROKEN CONCRETE, MASONRY, RUBBLE OR OTHER SIMILAR MATERIALS. IT SHALL HAVE PHYSICAL PROPERTIES SUCH THAT IT CAN BE READILY SPREAD AND COMPACTED DURING FILLING. ADDITIONAL COMMON FILL SHALL BE IN ACCORDANCE WITH FDOT SPECIFICATIONS, UNLESS FINER MATERIAL IS APPROVED FOR USE IN A SPECIFIC LOCATION BY THE UTILITY COMPANY.

EXISTING LEGEND

- EXISTING GRAVEL
- EXISTING CONCRETE
- EXISTING PAVEMENT
- EXISTING RIGHT OF WAY
- EXISTING CENTERLINE
- UG — EXISTING GAS LINE
- OHE — EXISTING OVERHEAD UTILITY LINE
- TEL — EXISTING FIBER OPTIC LINE
- UTIL — EXISTING MISC. UTILITY
- 123 — EXISTING CONTOUR
- PW — EXISTING POTABLE WATER
- TOB — EXISTING TOP OF BANK
- TOS — EXISTING TOE OF SLOPE
- EXISTING SANITARY/STORM MANHOLE
- EXISTING TREES
- EXISTING BASIN LINE
- TIME OF CONCENTRATION (TOC) PATH

DEMO LEGEND

- DEMO EXISTING PAVEMENT
- DEMO EXISTING CONCRETE
- MILL & RESURFACE EXISTING PAVEMENT

PROPOSED LEGEND

- PROPOSED STANDARD-DUTY PAVEMENT (SEE SHEETS C300 & C700)
- PROPOSED HEAVY DUTY PAVEMENT (SEE SHEETS C300 & C700)
- PROPOSED STANDARD-DUTY CONCRETE (SEE SHEETS C300 & C700)
- PROPOSED HEAVY DUTY CONCRETE (SEE SHEETS C300 & C700)
- CONTECH UNDERGROUND SYSTEM
- PROJECT BOUNDARY LINE
- PW — PROPOSED POTABLE WATER LINE
- SILT — PROPOSED SILT FENCE
- > — PROPOSED FLOW LINE
- PROPOSED GRADE BREAK
- PROPOSED EASEMENT
- LANDSCAPE BUFFER
- BUILDING SETBACK
- TREE BARRIER (TREE PROTECTION)
- 123 — PROPOSED CONTOUR
- PROPOSED DRAINAGE BASIN LINE
- PROPOSED STORM SEWER PIPE
- 50.00 — PROPOSED SPOT GRADE
- HYD — PROPOSED FIRE HYDRANT
- PROPOSED WATER VALVE
- PROPOSED REDUCER
- SV — PROPOSED SHUT-OFF VALVE
- STORM MANHOLE
- SOIL BORING

NOTE: NOT ALL ITEMS MAY BE USED ON THESE PLANS

REVISION BLOCK

NO.	DATE	DESCRIPTION
1	11/21/2024	REVISED PER SJRWMD & CITY OF MOUNT DORA COMMENTS

SANTOS MEDINA, III, P.E.
STATE OF FLORIDA
PROFESSIONAL ENGINEER
LICENSE NO. 74539

SANTOS MEDINA III LICENSE No. 74539 PROFESSIONAL ENGINEER

This item has been digitally signed and sealed by the engineer on the date indicated herein. Printed copies of this document are not considered signed and sealed. Signature must be verified on any electronic copies.

11/21/2024

NOT VALID UNLESS PHYSICALLY, DIGITALLY, OR ELECTRONICALLY SIGNED AND SEALED

DESIGNED BY: SM
DRAWN BY: DH
CHECKED BY: SM

SLOAN Engineering Group
150 SOUTH WOODLAWN AVENUE, BARTOW, FL 33830
PHONE: (863) 800-3046 - FAX: (863) 800-1159
FLORIDA CERTIFICATE OF AUTHORIZATION (FLCA) #26247

CLIENT: EUDORA ROAD, LLC

PROJECT: FREDDY'S FROZEN CUSTARD - MOUNT DORA

NOTES & SPECIFICATIONS

2495 EUDORA RD, MT DORA, FLORIDA 32757

PROJECT NO. 2575

SHEET C101

X:\Engineering\2575-FFC of Central Florida-Freddy's Frozen Custard-Mt Dora\cad\2575 Base.dwg, C101-Notes & Specifications, 11/21/2024 8:49:59 AM, dharper, 1:1

Sunshine 811

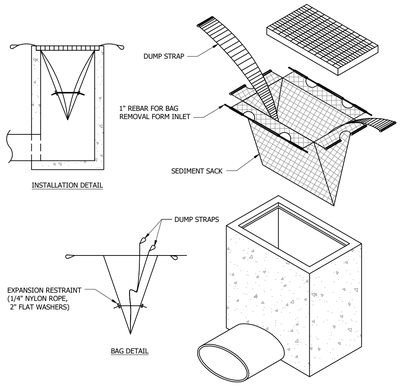

INLET PROTECTION DETAIL

N.T.S.

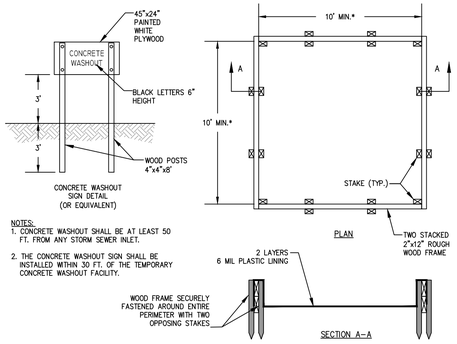

NOTES:
1. CONCRETE WASHOUT SHALL BE AT LEAST 50 FT. FROM ANY STORM SEWER INLET.
2. THE CONCRETE WASHOUT SIGN SHALL BE INSTALLED WITHIN 30 FT. OF THE TEMPORARY CONCRETE WASHOUT FACILITY.

WASHOUT FACILITY DETAIL

N.T.S.

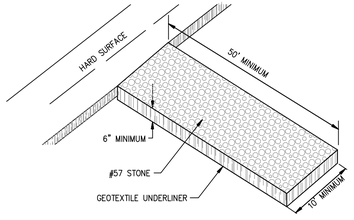

CONSTRUCTION ENTRANCE DETAIL

N.T.S.

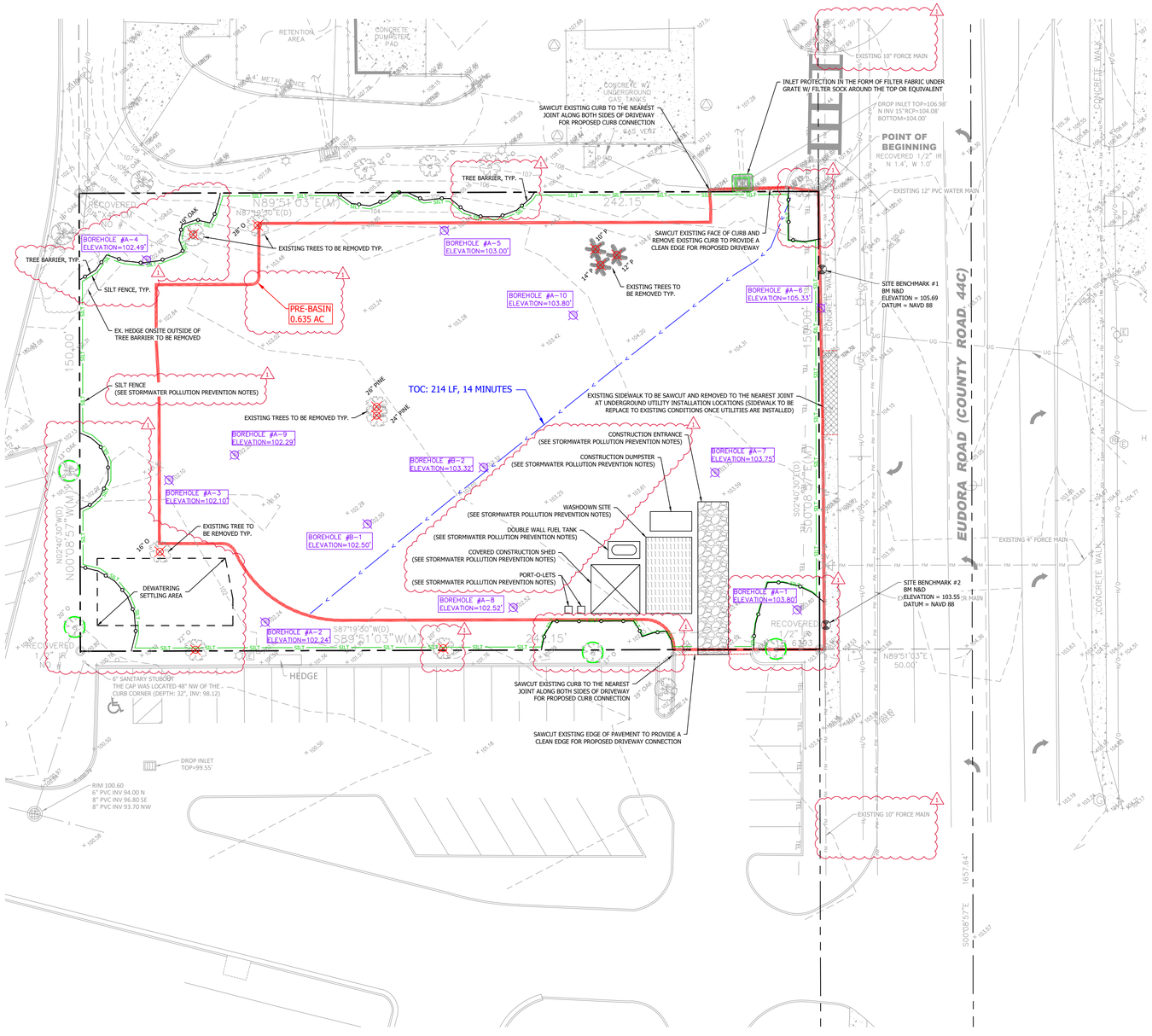

NORTH

SCALE: 1" = 20'

0' 20' 40'

LANDSCAPE LEGEND	
-	EXISTING TREE TO REMAIN (SEE DETAIL THIS SHEET FOR PROTECTION)
-	EXISTING TREE TO BE REMOVED

(VERIFY WITH CODE LANDSCAPE PLANS FOR FREDDY'S STEAKBURGERS BY HALFF)

GENERAL SURVEY NOTES:

1. BEARING STRUCTURE IS BASED ON EAST LINE OF THE SOUTHEAST 1/4 OF SECTION 23-19-26, BEING S00°08'57"E ASSUMED.

2. THIS SURVEY REFLECTS ONLY MATTERS OF RECORD AS PROVIDED BY THE CLIENT OR CLIENTS REPRESENTATIVE.

3. THIS SURVEY WAS MADE ON THE GROUND. THE UNDERGROUND UTILITIES SHOWN HAVE BEEN LOCATED FROM FIELD SURVEY INFORMATION AND EXISTING DRAWINGS. THE SURVEYOR MAKES NO GUARANTEE THAT THE UNDERGROUND UTILITIES SHOWN COMPRISE ALL SUCH UTILITIES IN THE AREA, EITHER IN SERVICE OR ABANDONED. THE SURVEYOR FURTHER DOES NOT WARRANT THAT THE UNDERGROUND UTILITIES SHOWN ARE IN THE EXACT LOCATION INDICATED ALTHOUGH HE DOES CERTIFY THAT THEY ARE LOCATED AS ACCURATELY AS POSSIBLE FROM INFORMATION AVAILABLE. THE SURVEYOR HAS NOT PHYSICALLY LOCATED THE UNDERGROUND UTILITIES. ENGINEER AND CONTRACTOR SHALL VERIFY MEASUREMENTS OF CONNECTIONS TO EXISTING UTILITIES BEFORE ORDERING MATERIALS AND BEFORE COMMENCEMENT OF CONSTRUCTION. IF THERE IS A DISCREPANCY BETWEEN THE MEASUREMENTS SHOWN HEREON AND THE VERIFYING MEASUREMENTS, THIS SURVEYOR SHALL BE CONTACTED IMMEDIATELY TO FURTHER VERIFY THE DISCREPANCY.

4. THIS SITE LIES IN ZONE X PER FLOOD INSURANCE RATE MAP NO. 12069C0358E, COMMUNITY NO. 120137, CITY OF MOUNT DORA, FLORIDA, EFFECTIVE 12-18-2012.

5. ACCORDING TO FLORIDA STATUTES, CHAPTER 472.025, A LAND SURVEYOR SHALL NOT AFFIX HIS SEAL OR NAME TO ANY PLAN OR DRAWING WHICH DEPICTS WORK WHICH HE IS NOT LICENSED TO PERFORM OR WHICH IS BEYOND HIS PROFESSION OR SPECIALTY THEREIN. THEREFORE, WE ARE UNABLE TO CERTIFY AS TO MUNICIPAL ZONING COMPLIANCE, INTERPRETATION OF ZONING CODES OR THE DETERMINATION OF VIOLATIONS THEREOF.

6. THIS SURVEY IS VALID ONLY TO THE PARTIES TO WHOM IT IS CERTIFIED AND IS NON-TRANSFERABLE.

7. THIS SURVEY MADE WITHOUT BENEFIT OF COMMITMENT FOR TITLE OR SEARCH OF PUBLIC RECORDS FOR EASEMENTS AND/OR ENCUMBRANCES THAT MAY AFFECT THIS SUBJECT PROPERTY.

8. "ELEVATIONS BASED ON D.O.T. BENCHMARK #BM-290, AKA LAKE COUNTY BM #HB110038. A CONCRETE MONUMENT ON THE NORTH SIDE OF SR 441, IN ORANGE GROVE, ACROSS FROM PET SUPERMARKET. ELEVATION=103.166 FEET, NGVD 1929 DATUM. ELEVATIONS HAVE BEED CONVERTED TO NAVD 1988 DATUM, USING VERTCON CONVERSION OF -0.932'." AS SHOWN ON BOUNDARY & TOPOGRAPHIC SURVEY BY SHANNON SURVEYING, INC. DATED 08-08-2022.

9. THE MAPPED FEATURES SHOWN HEREON ARE RELATIVE TO ASSUMED HORIZONTAL DATUM.

10. SHADED IMPROVEMENTS AND SPOT ELEVATIONS ARE SHOWN WITH PERMISSION FROM SHANNON SURVEYING, INC. PER SURVEY PREPARED BY SHANNON SURVEYING, INC. DATED 08/08/2022, FILE NUMBER 23-19-26 EUDORA .

11. THE MAPPED FEATURES SHOWN HEREON ARE RELATIVE TO FLORIDA STATE PLANE COORDINATE SYSTEM EAST ZONE, NAD(83)-(2011)-(EPOCH 2010.0000), ESTABLISHED PER FDOT FPRN

NO.	DATE	DESCRIPTION
1	11/21/2024	REVISED PER SJRWMD & CITY OF MOUNT DORA COMMENTS

REVISION BLOCK

SANTOS MEDINA, III, P.E. LICENSED FLORIDA PROFESSIONAL ENGINEER LICENSE NO. 74359 11/21/2024 NOT VALID WITHOUT THE ORIGINAL SIGNATURE AND ORIGINAL SEALED

DESIGNED BY:	DRAWN BY:	CHECKED BY:
SM	DH	SM

SLOAN Engineering Group
159 SOUTH WOODLAWN AVENUE, BARTOW, FL 33830
PHONE: (863) 800-3946 - FAX: (863) 800-1159
FLORIDA CERTIFICATE OF AUTHORIZATION (FLCA) #26247

CLIENT: EUDORA ROAD, LLC

PROJECT: FREDDY'S FROZEN CUSTARD - MOUNT DORA

DEMOLITION & SWPP PLAN

2495 EUDORA RD, MT DORA, FLORIDA 32757

PROJECT NO.	SHEET
2575	C200

X:\Engineering\2575-FFC of Central Florida-Freddy's Frozen Custard-Mt Dora\cad\2575 Base.dwg, C200-Demolition & SWPP Plan, 11/21/2024 8:50:10 AM, dharper, 1:1

Sunshine 811

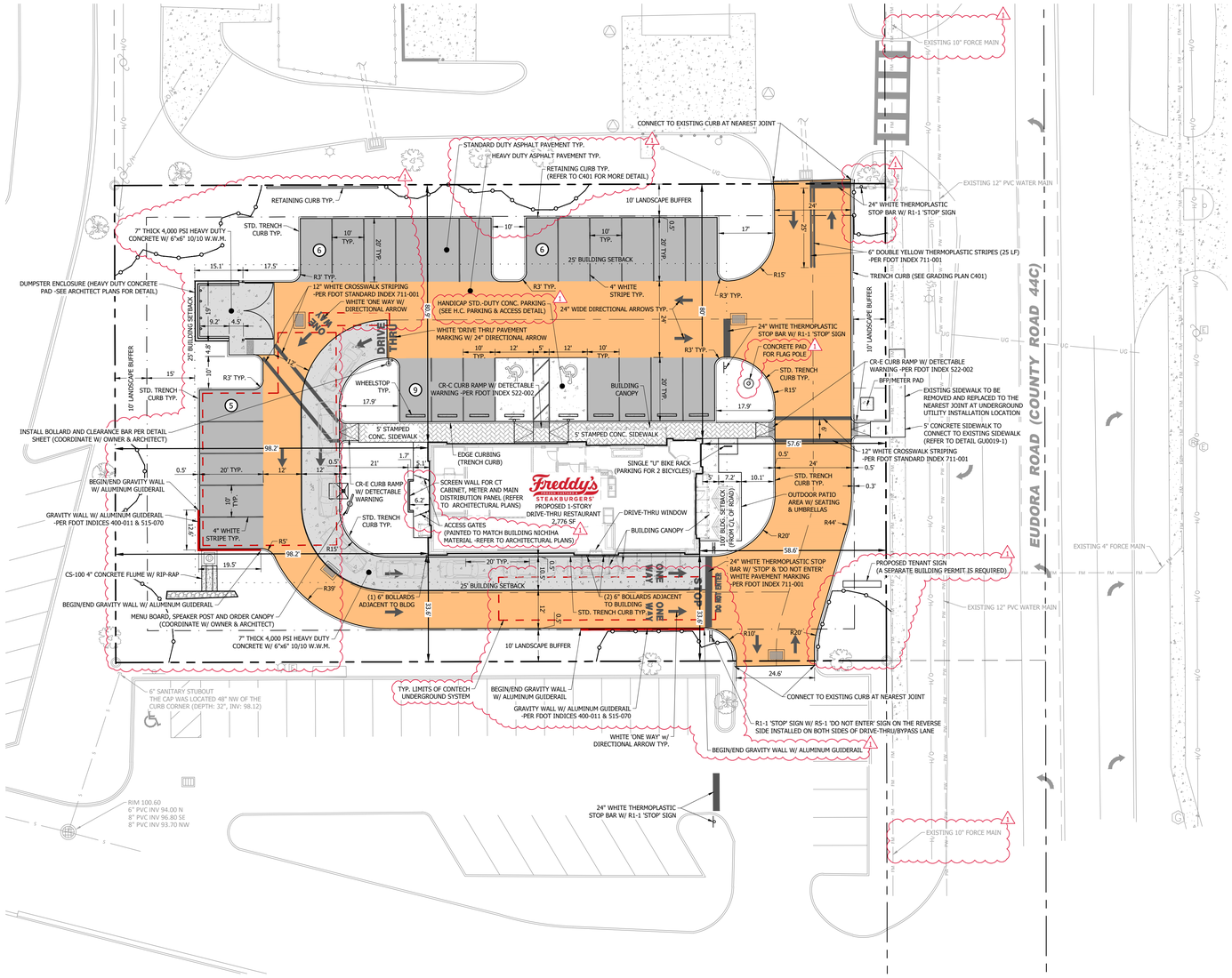

NORTH

SCALE: 1" = 20'

0' 20' 40'

SITE CHARACTERISTICS

PARCEL INFORMATION:

PROJECT LOCATION:	EUDORA ROAD MOUNT DORA, FLORIDA 32757 SECTION 23, TOWNSHIP 19 SOUTH, RANGE 26 EAST
PARCEL ID:	231926-000400-010700
PROJECT/SITE AREA:	36,323 SF / 0.83 AC
ALT KEY:	3618921 (CITY OF MOUNT DORA)
ZONING:	C-3 (HIGHWAY COMMERCIAL)
FUTURE LAND USE:	COMMERCIAL
CURRENT USE:	VACANT LOT
PROPOSED USE:	FAST-FOOD RESTAURANT
MAXIMUM ISR:	65% (0.65)
PROPOSED ISR:	63.74% (0.6374)
MAXIMUM FAR:	0.35
PROPOSED FAR:	0.076
OPEN SPACE:	13,172 SF / 0.30 AC
MAXIMUM BUILDING HEIGHT:	65'
PROPOSED BUILDING HEIGHT:	23'-9"
BUILDING FFE:	105.50'
DIMENSION:	VARIES (1-STORY)
AREA:	2,776 SF
FLOOD AREA:	ZONE "X"
FIRM:	12069C0358E
FIRM DATE:	DECEMBER 18, 2012

BUILDING SETBACKS:

STREET SETBACK:	100 FEET FROM C/L
SIDE:	25 FEET
REAR:	25 FEET

LANDSCAPE BUFFERS:

FRONT LANDSCAPE BUFFER:	10 FEET
SIDE LANDSCAPE BUFFER:	10 FEET
REAR LANDSCAPE BUFFER:	10 FEET

DEVELOPMENTAL STATISTICS:

PRE DEVELOPMENT			
IMPERVIOUS:	0.000 AC	0 SF	0.00%
PERVIOUS:	0.834 AC	36,323 SF	100.00%
TOTAL SITE AREA:	0.834 AC	36,323 SF	100.00%
POST DEVELOPMENT			
PERVIOUS	0.302 AC	13,172 SF	36.26%
IMPERVIOUS	0.531 AC	23,151 SF	63.74%
PAVEMENT/CONCRETE	0.468 AC	20,375 SF	
BUILDING	0.064 AC	2,776 SF	
TOTAL SITE AREA:	0.834 AC	36,323 SF	100.00%

PARKING STATISTICS:

REQUIRED PARKING:
(ONE SPACE FOR EACH FOUR SEATS PLUS ONE SPACE FOR EACH EMPLOYEE ON THE LARGEST SHIFT)

72 SEATS / 4 =	18 SPACES
8 EMPLOYEES =	8 SPACES
TOTAL REQUIRED PARKING =	26 SPACES

PROVIDED PARKING:

STANDARD SPACES =	24 SPACES
HANDICAP SPACES =	2 SPACES
TOTAL PARKING PROVIDED =	26 SPACES

STAMPED CONCRETE:

BUILDING'S WALKWAY AREA:	1,354.1 SF	100%
REGULAR CONCRETE AREA:	540.9 SF	39.95%
STAMPED CONCRETE AREA:	813.2 SF	60.05%

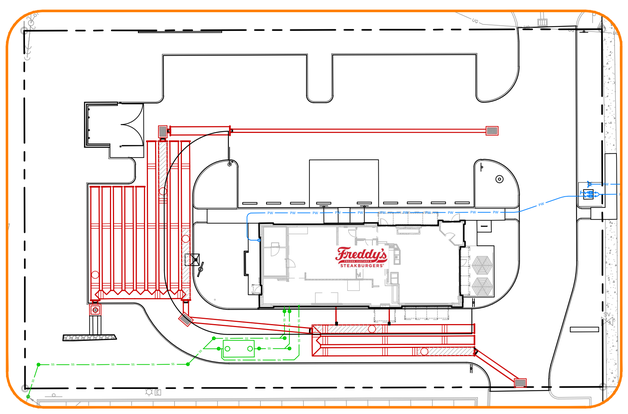

UNDERGROUND EXFILTRATION SYSTEM DETAIL

SCALE: 1" = 30'

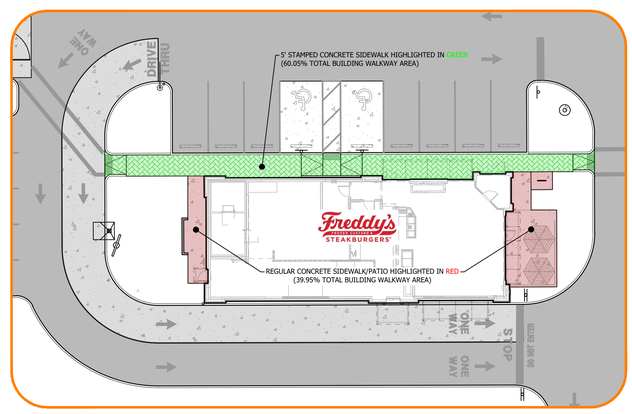

STAMPED CONCRETE LOCATION DETAIL

SCALE: 1" = 20'

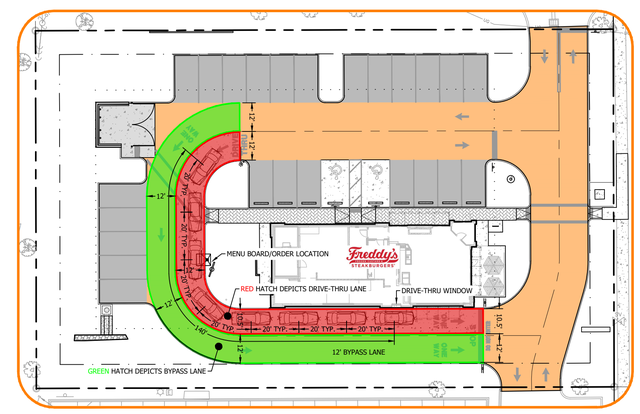

DRIVE-THRU & BYPASS LANE DETAIL VIEW

SCALE: 1" = 30'

NO.	DATE	DESCRIPTION
1	11/21/2024	REVISED PER SJRWMD & CITY OF MOUNT DORA COMMENTS

REVISION BLOCK

SANTOS MEDINA, III, P.E. SENIOR VICE PRESIDENT PROFESSIONAL ENGINEER LICENSE NO. 74359 11/21/2024 THIS ITEM HAS BEEN DIGITALLY SIGNED AND SEALED. PRINTED COPIES OF THIS DOCUMENT ARE NOT CONSIDERED SIGNED AND SEALED AND THE SIGNATURE MUST BE VERIFIED ON ANY ELECTRONIC COPIES. NOT VALID WITHOUT THE SIGNATURE AND ORIGINAL RAISED SEAL OF A FLORIDA LICENSED PROFESSIONAL ENGINEER. THIS DOCUMENT WAS ORIGINALLY ISSUED AND SEALED ELECTRONICALLY. NOT VALID WITHOUT THE ORIGINAL SEAL OF A FLORIDA LICENSED PROFESSIONAL ENGINEER. THIS DOCUMENT WAS ORIGINALLY ISSUED AND SEALED ELECTRONICALLY.

DESIGNED BY:	DRAWN BY:	CHECKED BY:
SM	DH	SM

SLOAN Engineering Group
150 SOUTH WOODLAWN AVENUE, BARTOW, FL 33830
PHONE: (863) 800-3046 - FAX: (863) 800-1159
FLORIDA CERTIFICATE OF AUTHORIZATION (FLCA) #26247

CLIENT: EUDORA ROAD, LLC

PROJECT: FREDDY'S FROZEN CUSTARD - MOUNT DORA

SITE PLAN

2495 EUDORA RD, MT DORA, FLORIDA 32757

PROJECT NO.	SHEET
2575	C300

X:\Engineering\2575-FFC of Central Florida-Freddy's Frozen Custard-Mt Dora\acd\2575 Base.dwg, C300-Site Plan, 11/21/2024 8:50:22 AM, dharper, 1:1

Sunshine 811

Turning Performance Analysis

08/04/2021

Bid Number: 626
Department: Mount Dora Fire Department

Chassis: Enforcer Chassis, PUC
Body: Pumper, PUC, Aluminum

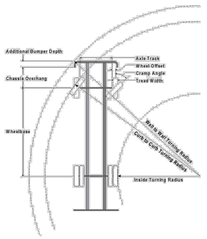

Parameters:

*Inside Cramp Angle:	50°
Axle Track:	85.86 in.
Wheel Offset:	4.68 in.
Tread Width:	15.9 in.
Chassis Overhang:	65.95 in.
Additional Bumper Depth:	26 in.
Front Overhang:	91.95 in.
Wheelbase:	195.5 in.

Calculated Turning Radii:

Inside Turn:	12 ft. 7 in.
Curb to curb:	27 ft. 6 in.
Wall to wall:	32 ft. 5 in.

Category	Option	Description
Axle, Front, Custom	0630699	Axle, Front, Dana, D-2000F, 18,000 lb (385 Tires) Saber FR/Enforcer
Wheels, Front	0752585	Wheels, Front, Alcoa, 22.50" x 12.25", Aluminum, Dura-Black, Hub Pilot
Tires, Front	0594822	Tires, Front, Goodyear, G296 MSA, 385/65R22.50, 18 ply
Bumpers	0737133	Bumper, 27" Extended, Under Slung, Painted, Recessed Xtays/Trays,12" H, SFR/Enf

Notes:

*Actual Inside cramp angle may be less than shown.

Curb to Curb turning radius calculated for 9.00 inch curb.

Definitions:

Inside CrampAngle	Maximum turning angle of the front inside fire.
Axle Track	King-pin to King-pin distance of front axle.
Wheel Offset	Offset from the center line of the wheel to the King-pin.
Tread Width	Width of the tire tread.
Chassis Overhang	Distance of the center line of the front axle to the front edge of the cab. This does not include the bumper depth.
Additional Bumper Wheel	Depth that the bumper assembly adds to the front overhang.
Wheelbase	Distance between the center lines of the vehicles front and rear axles.
Inside Turning Radius	Radius of the smallest circle around which the vehicle can turn.
Curb to Curb Turning Radius	Radius of the smallest circle around which the vehicle's tires can turn. This measures assumes a curb height of 9 inches.
Wall to Wall Turning Radius	Radius of the smallest circle around which the vehicle's tires can turn. This measures takes into account any front overhang due to chassis , bumper extensions and or aerial devices.

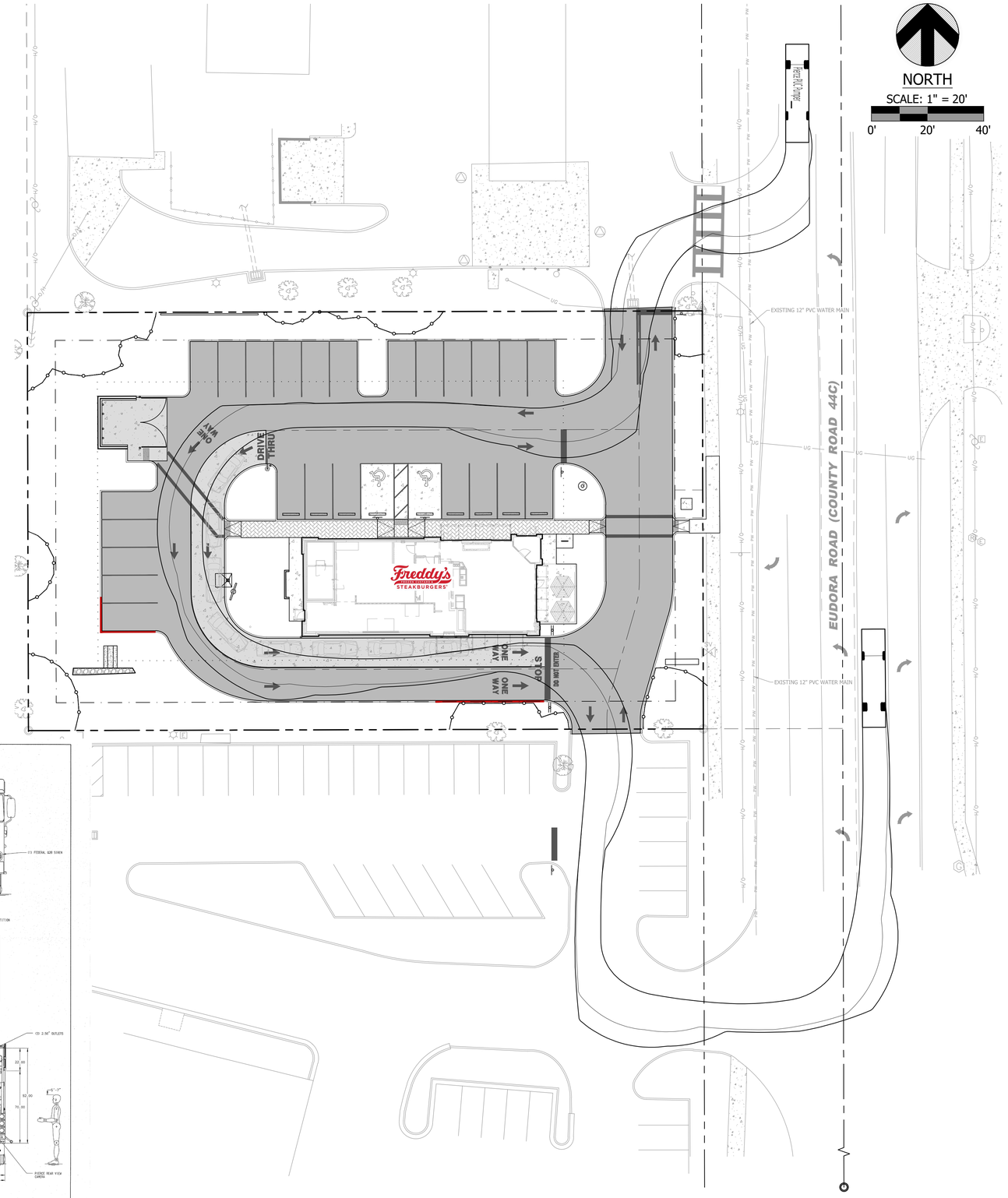

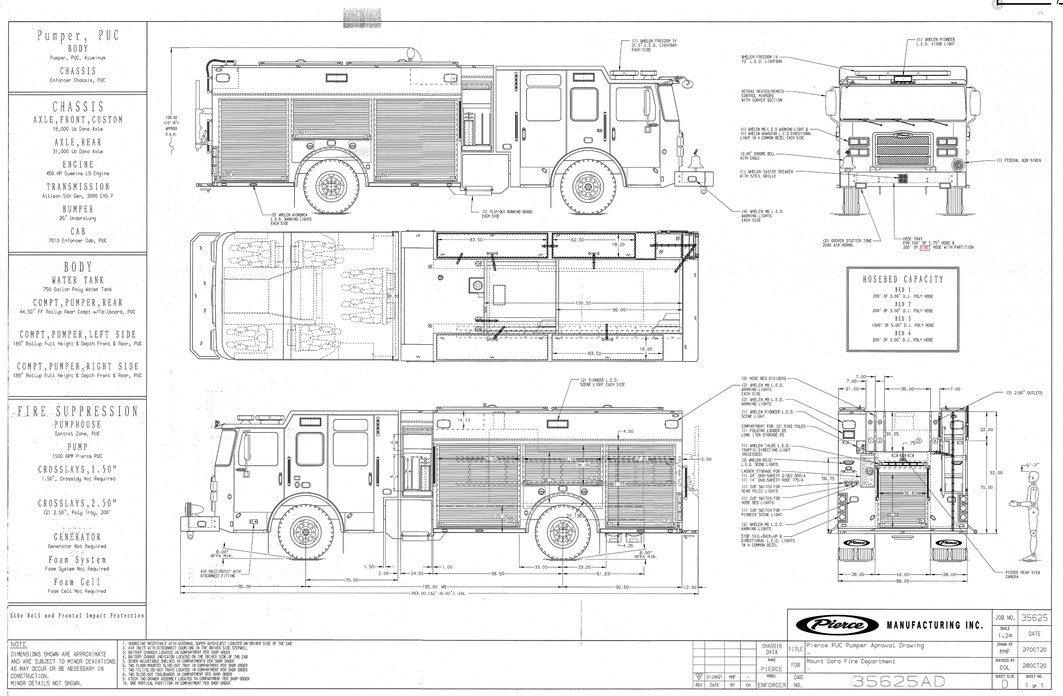

NO.	DATE	DESCRIPTION
1	11/21/2024	REVISED PER SJRWMD & CITY OF MOUNT DORA COMMENTS

REVISION BLOCK

SANTOS MEDINA, III, P.E.
SENIOR VICE PRESIDENT
PROFESSIONAL ENGINEER
LICENSE NO. 74359
STATE OF FLORIDA
11/21/2024
NOT VALID WITHOUT THE SIGNATURE AND ORIGINAL RAISED SEAL OF A FLORIDA LICENSED ENGINEER
THIS DOCUMENT WAS ORIGINALLY ISSUED AND SEALED

DESIGNED BY: SM
DRAWN BY: DH
CHECKED BY: SM

SLOAN Engineering Group
150 SOUTH WOODLAWN AVENUE, BARTOW, FL 33830
PHONE: (863) 800-3946 - FAX: (863) 800-1159
FLORIDA CERTIFICATE OF AUTHORIZATION (FLCA) #26247

CLIENT: EUDORA ROAD, LLC
PROJECT: FREDDY'S FROZEN CUSTARD - MOUNT DORA

TURNING RADIUS ANALYSIS PLAN

2495 EUDORA RD, MT DORA, FLORIDA 32757

PROJECT NO. 2575
SHEET C301

X:\Engineering\2575-FFC of Central Florida-Freddy's Frozen Custard-Mt Dora\cad\2575 Base.dwg, C301-Truck, 11/21/2024 8:50:47 AM, dharper, 1:1

Sunshine 811

Turning Performance Analysis

08/04/2021

Bid Number: 673
Department: Mount Dora Fire Department

Chassis: Velocity Chassis, 100AAT
Body: Aerial, 100AAT, Alum Body

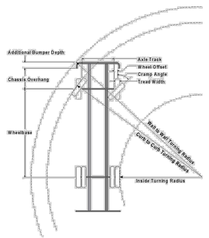

Parameters:

*Inside Cramp Angle:	40°
Axle Track:	82.92 in.
Wheel Offset:	4.68 in.
Tread Width:	16.3 in.
Chassis Overhang:	78 in.
Additional Bumper Depth:	15 in.
Front Overhang:	93 in.
Wheelbase:	261 in.

Calculated Turning Radii:

Inside Turn:	24 ft. 10 in.
Curb to curb:	40 ft. 5 in.
Wall to wall:	44 ft. 11 in.

Category	Option	Description
Axle, Front, Custom	0509846	Axle, Front, Oshkosh TAK-4, Non Drive, 24,000 lb, Velocity
Wheels, Front	0752585	Wheels, Front, Alcoa, 22.50" x 12.25", Aluminum, Dura-Black, Hub Pilot
Tires, Front	0677592	Tires, Front, Goodyear, G296 MSA, 425/65R22.50, 20 ply, Fire Service Load Rating
Bumpers	0725706	Bumper, 15" Extended, Alum, Painted, Integrated, 100AAT, VEL
Aerial Devices	0771866	Aerial, Ascendant 100' Aerial Tower

Notes:

*Actual Inside cramp angle may be less than shown.

Curb to Curb turning radius calculated for 9.00 inch curb.

Definitions:

Inside CrampAngle	Maximum turning angle of the front inside fire.
Axle Track	King-pin to King-pin distance of front axle.
Wheel Offset	Offset from the center line of the wheel to the King-pin.
Tread Width	Width of the tire tread.
Chassis Overhang	Distance of the center line of the front axle to the front edge of the cab. This does not include the bumper depth.
Additional Bumper Wheel	Depth that the bumper assembly adds to the front overhang.
Wheelbase	Distance between the center lines of the vehicles front and rear axles.
Inside Turning Radius	Radius of the smallest circle around which the vehicle can turn.
Curb to Curb Turning Radius	Radius of the smallest circle around which the vehicle's tires can turn. This measures assumes a curb height of 9 inches.
Wall to Wall Turning Radius	Radius of the smallest circle around which the vehicle's tires can turn. This measures takes into account any front overhang due to chassis , bumper extensions and or aerial devices.

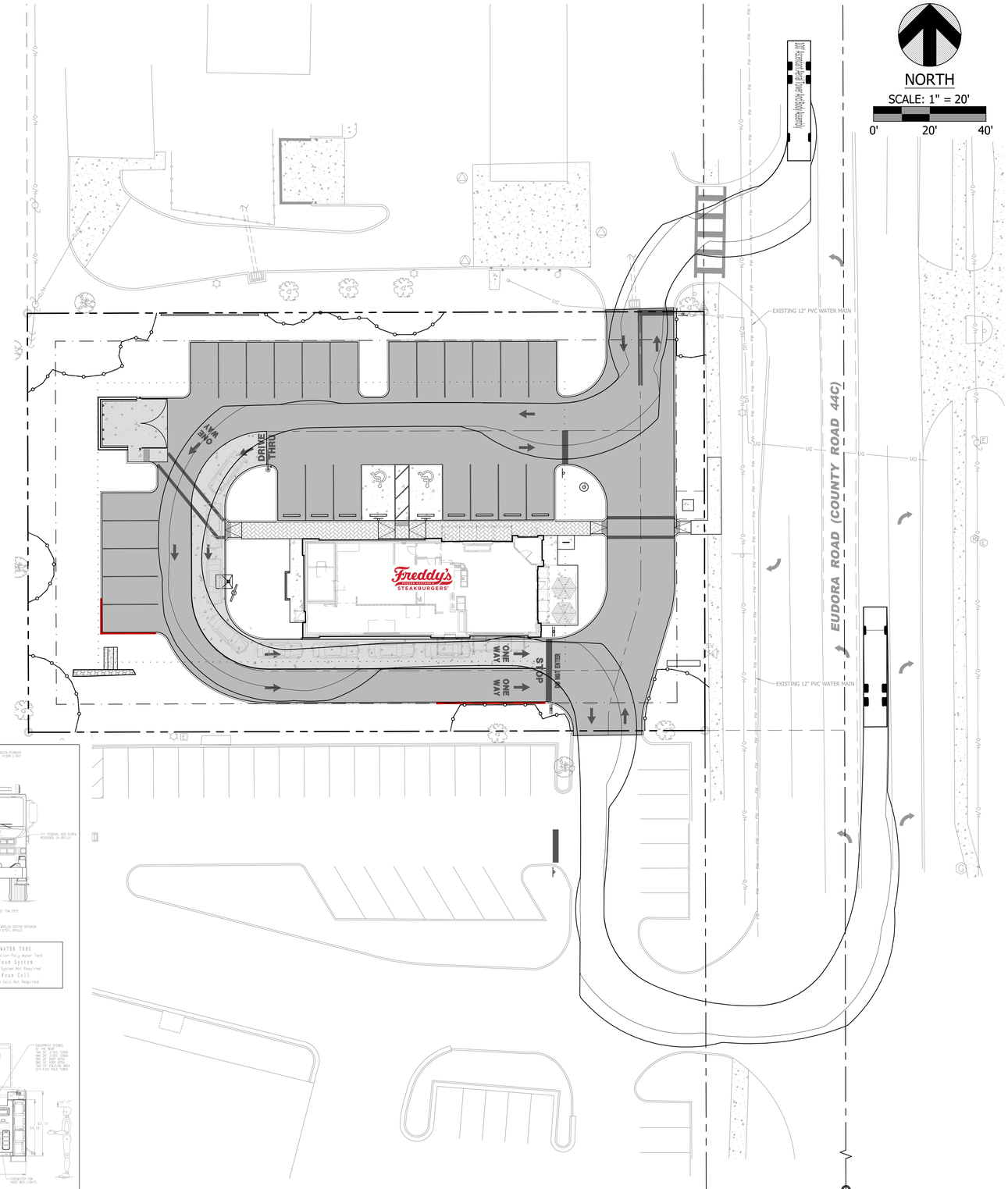

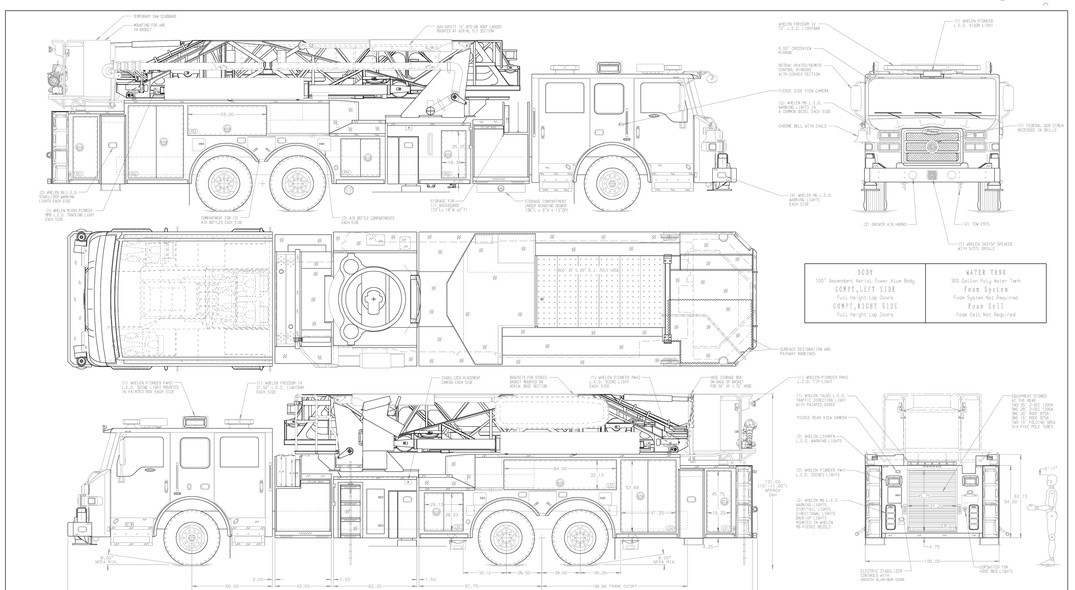

NO.	DATE	DESCRIPTION
1	11/21/2024	REVISED PER SJRWMD & CITY OF MOUNT DORA COMMENTS

REVISION BLOCK

SANTOS MEDINA, III, P.E.
SENIOR VICE PRESIDENT
PROFESSIONAL ENGINEER
LICENSE NO. 74339
11/21/2024
NOT VALID WITHOUT A SIGNATURE AND ORIGINAL RAISED SEAL OF A FLORIDA LICENSED ENGINEER
THIS DOCUMENT HAS BEEN ELECTRONICALLY SIGNED AND SEALED

DESIGNED BY: SM
DRAWN BY: DH
CHECKED BY: SM

SLOAN Engineering Group
150 SOUTH WOODLAWN AVENUE, BARTOW, FL 33830
PHONE: (863) 800-3046 - FAX: (863) 800-1159
FLORIDA CERTIFICATE OF AUTHORIZATION (FLCA) #26247

CLIENT: EUDORA ROAD, LLC
PROJECT: FREDDY'S FROZEN CUSTARD - MOUNT DORA

TURNING RADIUS ANALYSIS PLAN

2495 EUDORA RD., MT DORA, FLORIDA 32757

PROJECT NO.	SHEET
2575	C302

X:\Engineering\2575-FFC of Central Florida-Freddy's Frozen Custard-Mt Dora\cad\2575 Base.dwg, C302-Truck, 11/21/2024 8:50:57 AM, dharper, 1:1

Sunshine 811

NORTH

SCALE: 1" = 20'

0' 20' 40'

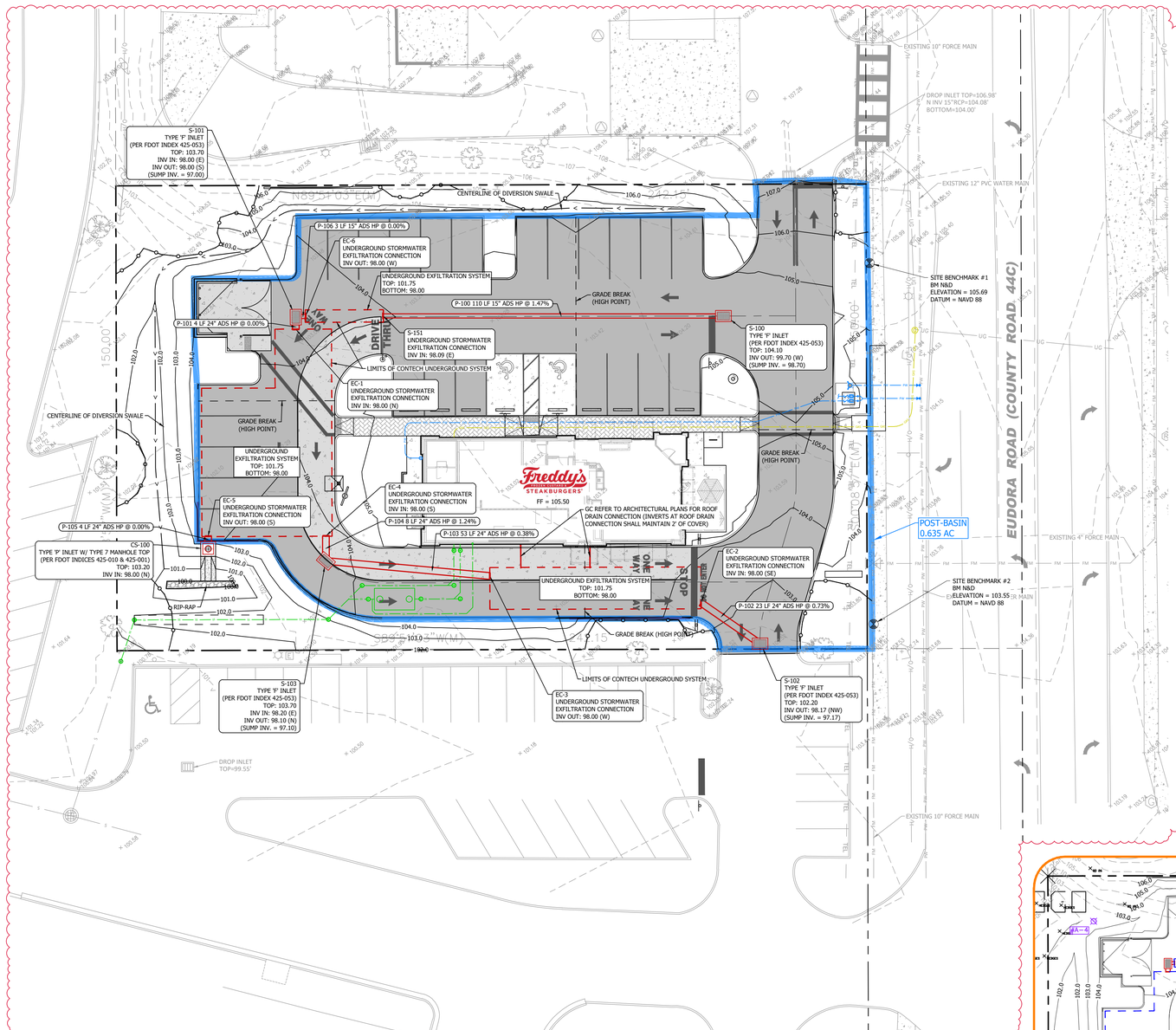

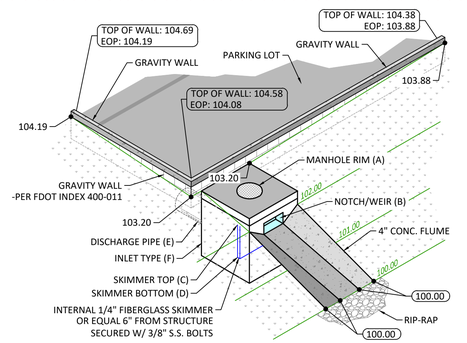

#	A	B	C	D	E	F
CS-100	103.20	24" @ 101.00	102.25	99.00	24" ADS HP @ 98.00	TYPE P INLET

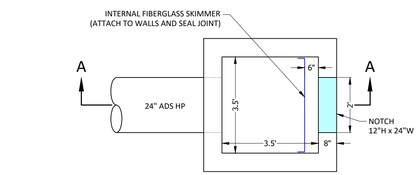

PLAN

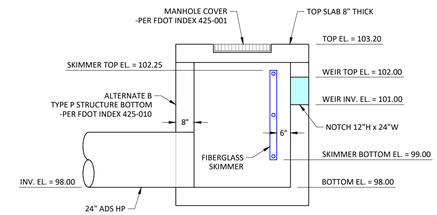

SECTION A-A

CS-100 CONTROL STRUCTURE DETAIL

N.T.S.

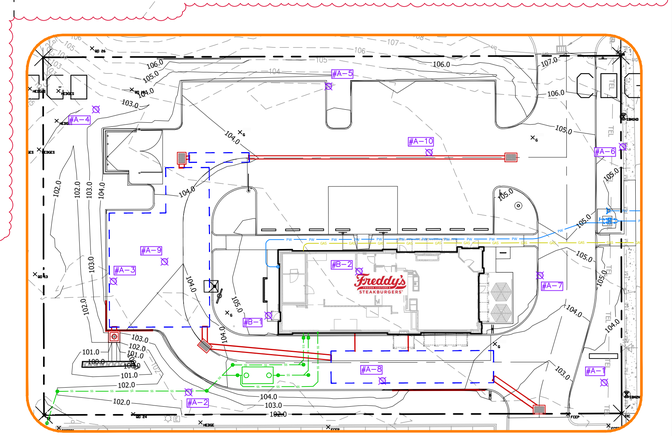

SOIL BORING LOCATIONS

SCALE: 1" = 30'

NO.	DATE	DESCRIPTION
1	11/21/2024	REVISED PER SJRWMD & CITY OF MOUNT DORA COMMENTS

REVISION BLOCK

SANTOS MEDINA, III, P.E.
STATE OF FLORIDA
PROFESSIONAL ENGINEER
LICENSE NO. 74339
11/21/2024
NOT VALID WITHOUT THE SIGNATURE AND ORIGINAL RAISED SEAL OF A FLORIDA LICENSED ENGINEER
NOT VALID WITHOUT THE SIGNATURE AND ORIGINAL RAISED SEAL OF A FLORIDA LICENSED ENGINEER

DESIGNED BY: SM
DRAWN BY: DH
CHECKED BY: SM

SLOAN Engineering Group
150 SOUTH WOODLAWN AVENUE, BARTOW, FL 33830
PHONE: (863) 800-3046 - FAX: (863) 800-1159
FLORIDA CERTIFICATE OF AUTHORIZATION (FLCA) #26247

CLIENT: EUDORA ROAD, LLC

PROJECT: FREDDY'S FROZEN CUSTARD - MOUNT DORA

GRADING & DRAINAGE PLAN

2495 EUDORA RD, MT DORA, FLORIDA 32757

PROJECT NO.	SHEET
2575	C400

X:\Engineering\2575-FFC of Central Florida-Freddy's Frozen Custard-Mt Dora\cad\2575 Base.dwg, C400-Grading & Drainage Plan, 11/21/2024 8:51:12 AM, dharper, 1:1

Sunshine 811

NORTH

SCALE: 1" = 10'

0' 10' 20'

NO.	DATE	DESCRIPTION
1	11/21/2024	REVISED PER SJRWMD & CITY OF MOUNT DORA COMMENTS

REVISION BLOCK

SANTOS MEDINA, III, P.E.
FLORIDA LICENSED
PROFESSIONAL ENGINEER
LICENSE NO. 74339
11/21/2024
NOT VALID WITHOUT A SIGNATURE AND ORIGINAL RAISED SEAL OF A FLORIDA LICENSED ENGINEER

DESIGNED BY:	DRAWN BY:	CHECKED BY:
SM	DH	SM

SLOAN Engineering Group
150 SOUTH WOODLAWN AVENUE, BARTOW, FL 33830
PHONE: (863) 800-3046 - FAX: (863) 800-1159
FLORIDA CERTIFICATE OF AUTHORIZATION (FLCA) #26247

CLIENT: EUDORA ROAD, LLC

PROJECT: FREDDY'S FROZEN CUSTARD - MOUNT DORA

2495 EUDORA RD, MT DORA, FLORIDA 32757

GRADING PLAN

PROJECT NO.	SHEET
2575	C401

X:\Engineering\2575-FFC of Central Florida-Freddy's Frozen Custard-Mt Dora\cad\2575 Base.dwg, C401-Grading Plan, 11/21/2024 10:07:30 AM, dharper, 1:1

Sunshine 811

TREE PROTECTION NOTES

1. ALL WORK WITHIN THE EXISTING TREE DRIP LINE SHALL BE DONE USING HAND TOOLS ONLY.
2. CONTRACTOR TO KEEP ROOT DISTURBANCE TO A MINIMUM.
3. PRIOR TO GRADING, RELOCATE PROTECTIVE FENCING TO 2 FEET BEHIND THE GRADE CHANGE AREA.
4. ALL TREE ROOTS EXISTING WITHIN APPROVED IMPROVEMENT AREAS AND ORIGINATING FROM A PROTECTED TREE, SHALL BE SEVERED CLEAN AT THE LIMITS OF THE PRESERVED AREA WHERE INDICATED ON THE APPROVED CONSTRUCTION PLANS.
5. ROOT PRUNING EQUIPMENT SELECTED WILL BE EQUIVALENT TO A DOSKO ROOT CUTTER.
6. ALL ROOT PRUNING ACTIVITIES SHALL BE OBSERVED BY AN ISA ARBORIST WITH A MINIMUM OF 5 YEAR EXPERIENCE ON SIMILAR PROJECTS.

NORTH

SCALE: 1" = 10'

0' 10' 20'

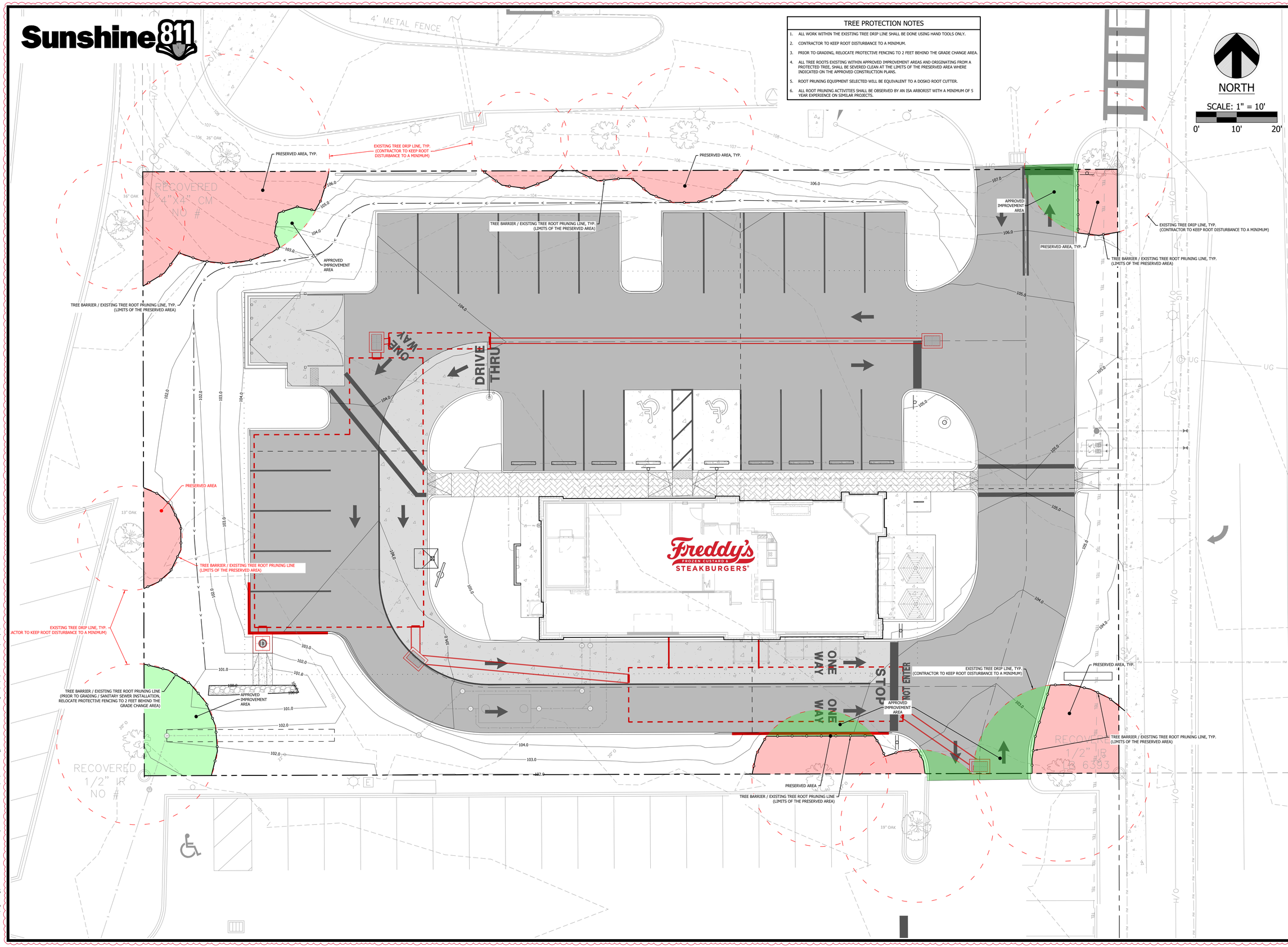

NO.	DATE	DESCRIPTION
1	11/21/2024	REVISED PER SJRWMD & CITY OF MOUNT DORA COMMENTS

REVISION BLOCK

SANTOS MEDINA, III, P.E.
STATE OF FLORIDA
PROFESSIONAL ENGINEER
LICENSE NO. 74359
11/21/2024
NOT VALID WITHOUT THE SIGNATURE AND ORIGINAL RAISED SEAL OF A FLORIDA LICENSED ENGINEER
NOT VALID WITHOUT THE SIGNATURE AND ORIGINAL RAISED SEAL OF A FLORIDA LICENSED ENGINEER
SIGNED AND SEALED

DESIGNED BY:	DRAWN BY:	CHECKED BY:
SM	DH	SM

SLOAN Engineering Group
150 SOUTH WOODLAWN AVENUE, BARTOW, FL 33830
PHONE: (863) 800-3046 - FAX: (863) 800-1159
FLORIDA CERTIFICATE OF AUTHORIZATION (FLCA) # 26247

CLIENT: EUDORA ROAD, LLC

PROJECT: FREDDY'S FROZEN CUSTARD - MOUNT DORA

TREE PROTECTION SITE / GRADING PLAN

2495 EUDORA RD, MT DORA, FLORIDA 32757

PROJECT NO.	SHEET
2575	C402

X:\Engineering\2575-PFC of Central Florida-Freddy's Frozen Custard-Mt Dora\cad\2575 Base.dwg, C402-Tree Protection Grading Plan, 11/21/2024 8:51:58 AM, dharper, 1:1

Sunshine 811

UTILITY NOTES

1. THE CONTRACTOR SHALL PROTECT ALL EXISTING STRUCTURES AND UTILITIES NOTED TO REMAIN, FROM DAMAGE OR DISPLACEMENT DURING CONSTRUCTION. IN THE EVENT OBSTRUCTIONS ARE ENCOUNTERED, THE CONTRACTOR SHALL PROMPTLY NOTIFY THE ENGINEER AND THE UTILITY COMPANY. THE CONTRACTOR WILL BE RESPONSIBLE FOR ALL COSTS INCURRED TO REPAIR DAMAGE OR CORRECT DISPLACEMENT.
2. ALL CLEANOUTS IN TRAVEL LANES SHALL HAVE TRAFFIC RATED CAPS.
3. REFER TO SHEET C101 FOR THE GENERAL POTABLE WATER AND SANITARY SEWER NOTES.
4. THE PROPOSED UTILITIES WILL BE PRIVATELY MAINTAINED.

PROJECTED FLOWS

POTABLE WATER/WASTEWATER

- PER CHAPTER 64E-6, TABLE 1, FOOD OPERATIONS FOR RESTAURANT OPERATING 16 HOURS OR LESS PER DAY PER SEAT. (40 GPD/SEAT)
- 72 SEATS x 40 GPD/SEAT = **2,880 GPD**

IRRIGATION

- TOTAL ZONE GPM x 30 MIN. RUN TIME (2x PER WEEK)
- 116.92 GPM x 30 GPM x 2 = 7 = **1,002 GPD**

NORTH

SCALE: 1" = 20'

0' 20' 40'

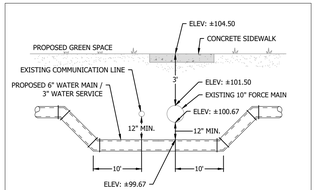

NOTE:
INSTALL 45° BENDS AS NECESSARY TO ACHIEVE A MIN. OF 12" VERTICAL SEPARATION.

UTILITY CONFLICT DETAIL NO.4

N.T.S.

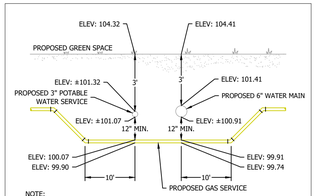

NOTE:
WHERE PROPOSED GAS SERVICE AND PROPOSED WATER MAIN CROSS INSTALL 45° BENDS AS NECESSARY TO ACHIEVE A MINIMUM OF 12" VERTICAL SEPARATION.

UTILITY CONFLICT DETAIL NO.5

N.T.S.

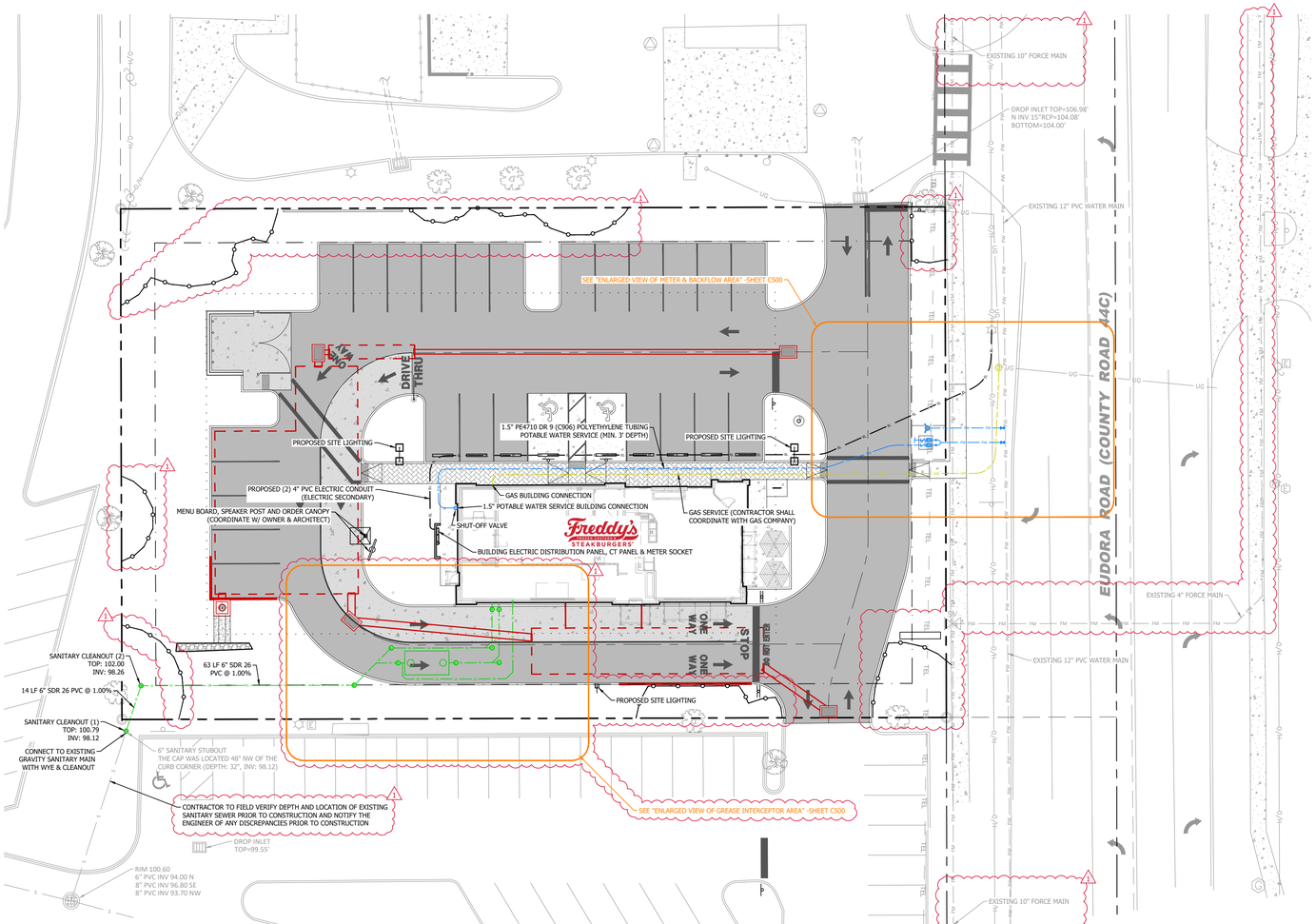

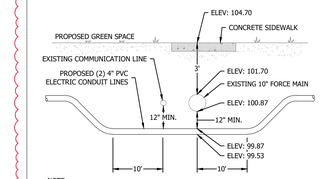

NOTE:
WHERE PROPOSED ELECTRIC/TELCOMMUNICATION LINES AND EX. WATER MAIN CROSS DEFLECT ELEC./TELE. CONDUIT AS SHOWN. A MINIMUM 12" OF CLEARANCE MUST BE MAINTAINED ON THE SERVICE LINES.

UTILITY CONFLICT DETAIL NO.1

N.T.S.

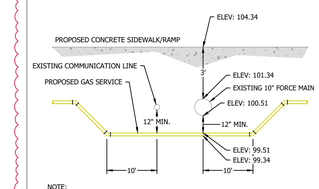

NOTE:
WHERE PROPOSED GAS SERVICE AND EX. WATER MAIN CROSS INSTALL 45° BENDS AS NECESSARY TO ACHIEVE A MINIMUM OF 12" VERTICAL SEPARATION.

UTILITY CONFLICT DETAIL NO.2

N.T.S.

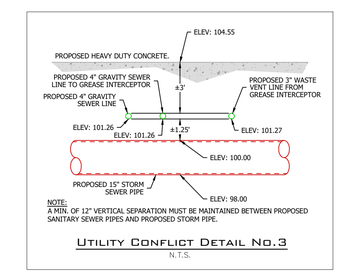

NOTE:
A MIN. OF 12" VERTICAL SEPARATION MUST BE MAINTAINED BETWEEN PROPOSED SANITARY SEWER PIPES AND PROPOSED STORM PIPE.

UTILITY CONFLICT DETAIL NO.3

N.T.S.

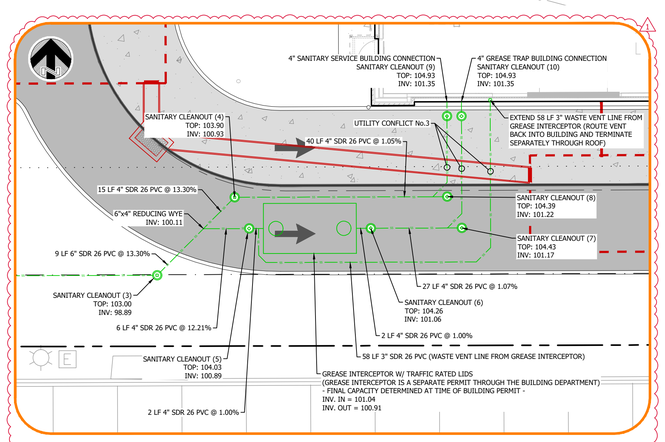

ENLARGED VIEW OF GREASE INTERCEPTOR AREA

SCALE: 1" = 10'

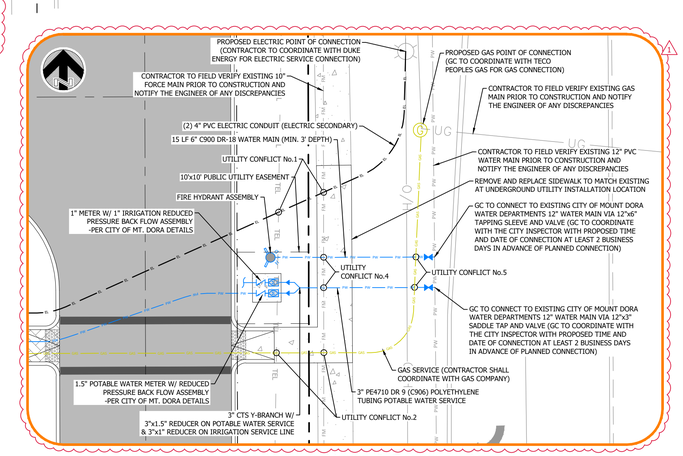

ENLARGED VIEW OF METER & BACKFLOW AREA

SCALE: 1" = 10'

NO.	DATE	DESCRIPTION
1	11/21/2024	REVISED PER SJRWMD & CITY OF MOUNT DORA COMMENTS

REVISION BLOCK

SANTOS MEDINA, III, P.E.
PROFESSIONAL ENGINEER
PROFESSIONAL ENGINEER
LICENSE NO. 74339
11/21/2024
NOT VALID WITHOUT THE SIGNATURE AND ORIGINAL RAISED SEAL OF A FLORIDA LICENSED ENGINEER

DESIGNED BY:	DRAWN BY:	CHECKED BY:
SM	DH	SM

SLOAN Engineering Group
150 SOUTH WOODLAWN AVENUE, BARTOW, FL 33830
PHONE: (863) 800-3046 - FAX: (863) 800-1159
FLORIDA CERTIFICATE OF AUTHORIZATION (FLCA) # 26247

CLIENT: EUDORA ROAD, LLC

PROJECT: FREDDY'S FROZEN CUSTARD - MOUNT DORA

2495 EUDORA RD, MT DORA, FLORIDA 32757

UTILITY PLAN

PROJECT NO.	SHEET
2575	C500

X:\Engineering\2575-FFC of Central Florida-Freddy's Frozen Custard-Mt Dora\cad\2575 Base.dwg, C500-Utility Plan, 11/21/2024 8:52:06 AM, dharper, 1:1

Sunshine 811

Luminaire Schedule							
Symbol	Qty	Label	Description	LLF	Luminaire Lumens	Luminaire Watts	Total Watts
	1	R2 HS	RSX2 LED P4 40K R2 HS	0.950	18967	189.54	189.54
	2	R4	RSX2 LED P4 40K R4	0.950	25328	189.54	379.08
	2	TWIN R4	RSX2 LED P4 40K R4	0.950	25328	189.54	758.16

Calculation Summary						
Label	Units	Avg	Max	Min	Avg/Min	Max/Min
Site Planar	Fc	5.36	12.6	0.9	5.96	14.00

NORTH

SCALE: 1" = 20'

0' 20' 40'

LIGHT POLE NOTE

1. LIGHT POLE FOOTERS MAY NOT BE EXPOSED MORE THAN SIX INCHES ABOVE FINISH GRADE.

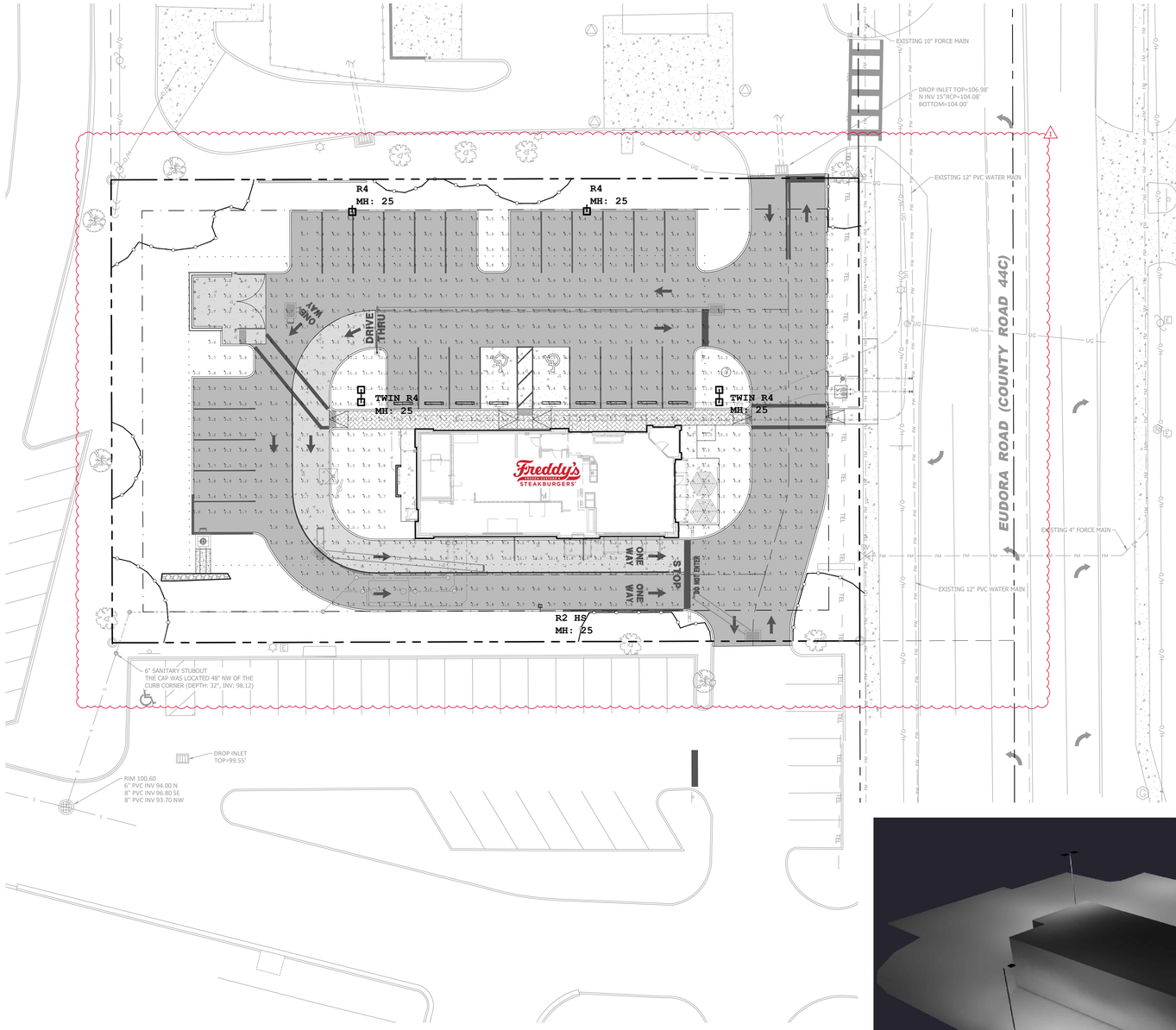

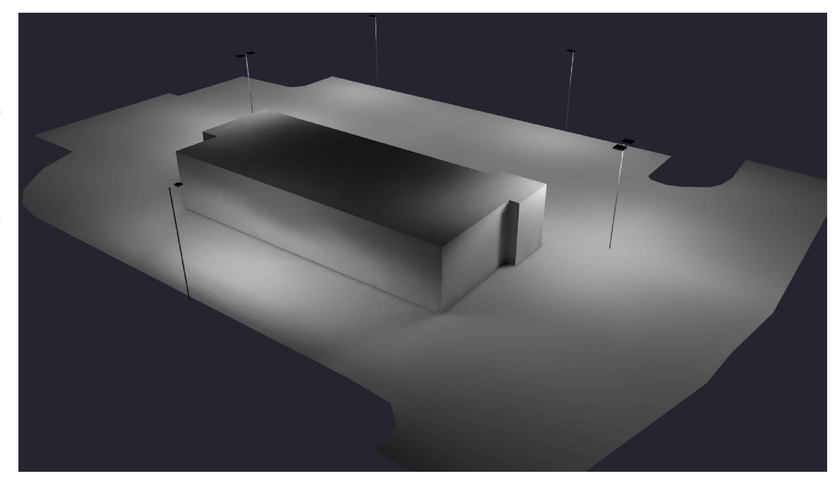

NO.	DATE	DESCRIPTION
1	11/21/2024	REVISED PER SJRWMD & CITY OF MOUNT DORA COMMENTS

REVISION BLOCK

SANTOS MEDINA, III, P.E.
SENIOR PROJECT ENGINEER
PROFESSIONAL ENGINEER
LICENSE NO. 74359
STATE OF FLORIDA
11/21/2024
NOT VALID WITHOUT THE SIGNATURE AND ORIGINAL RAISED SEAL OF A FLORIDA LICENSED PROFESSIONAL ENGINEER

DESIGNED BY:	DRAWN BY:	CHECKED BY:
SM	DH	SM

SLOAN Engineering Group
150 SOUTH WOODLAWN AVENUE, BARTOW, FL 33830
PHONE: (863) 800-3946 - FAX: (863) 800-1159
FLORIDA CERTIFICATE OF AUTHORIZATION (FLCA) #26247

CLIENT: EUDORA ROAD, LLC

PROJECT: FREDDY'S FROZEN CUSTARD - MOUNT DORA

LIGHTING PLAN

2495 EUDORA RD, MT DORA, FLORIDA 32757

PROJECT NO.	SHEET
2575	C501

X:\Engineering\2575-FFC of Central Florida-Freddy's Frozen Custard-Mt Dora\cad\2575 Base.dwg, C501-Lighting Plan, 11/21/2024 8:52:14 AM, dharper, 1:1

RSX2 LED
Area Luminaire

Catalog Number:

Notes: FREDDY'S MT. DORA, FL

Type: SITE LIGHTING

Specifications

EPA (ft²@0°): 0.69 ft² (0.06 m²)
Length: 29.3" (74.4 cm) (SPA mount)
Width: 13.4" (34.0 cm)
Height: 3.0" (7.6 cm) Main Body; 7.2" (18.3 cm) Arm
Weight (SPA mount): 30.0 lbs (13.6 kg)

Introduction

The new RSX LED Area family delivers maximum value by providing significant energy savings, long life and outstanding photometric performance at an affordable price. The RSX2 delivers 11,000 to 31,000 lumens allowing it to replace 250W to 1000W HID luminaires.

The RSX features an integral universal mounting mechanism that allows the luminaire to be mounted on most existing drill hole patterns. This "no-drill" solution provides significant labor savings. An easy-access door on the bottom of mounting arm allows for wiring without opening the electrical compartment. A mast arm adaptor, adjustable integral slipfitter and other mounting configurations are available.

design select: Items marked by a shaded background qualify for the Design Select program and ship in 15 days or less. To learn more about Design Select, visit www.acuitybrands.com/designselect. *See ordering tree for details

Design Select options indicated by this color background.

Ordering Information

EXAMPLE: RSX2 LED P6 40K R3 MVOLT SPA DDBXD

RSX2 LED

Series	Performance Package	Color Temperature	Distribution	Voltage	Mounting
RSX2 LED	P1, P2, P3, P4, P5, P6	30K 3000K; 40K 4000K; 50K 5000K	R2 Type 2 Wide SINGLE; R3 Type 3 Wide; R3S Type 3 Short; R4 Type 4 Wide TWIN; R4S Type 4 Short; R5 Type 5 Wide[1]; R5S Type 5 Short[1]; AFR Automotive Front Row; AFRR90 Automotive Front Row Right Rotated; AFRL90 Automotive Front Row Left Rotated	MVOLT (120V-277V)[2]; HVOLT (347V-480V)[3]; XVOLT (277V-480V)[4]; (use specific voltage for options as noted) 120[5], 208[5], 240[5], 277[5], 347[5], 480[5]	SPA Square pole mounting (3.0" min. SQ pole for 1 at 90°, 3.5" min. SQ pole for 2, 3, 4 at 90°); RPA Round pole mounting (3.2" min. dia. RND pole for 2, 3, 4 at 90°, 3.0" min. dia. RND pole for 1 at 90°, 2 at 180°, 3 at 120°); MA Mast arm adaptor (fits 2-3/8" OD horizontal tenon); IS Adjustable slipfitter (fits 2-3/8" OD tenon)[6]; WBA Wall bracket[1]; WBASC Wall bracket with surface conduit box; AASP Adjustable tilt arm square pole mounting[6]; AARP Adjustable tilt arm round pole mounting[6]; AAWB Adjustable tilt arm with wall bracket[6]; AAWSC Adjustable tilt arm wall bracket and surface conduit box[6]

Options

Shipped Installed
- HS House-side shield[7] SINGLE
- PE Photocontrol, button style[8,9]
- PER7 Seven-wire twist-lock receptacle only (no controls)[9,10,11]
- SF Single fuse (120, 277, 347)[5]
- DF Double fuse (208, 240, 480)[5]
- SPD20KV 20KV Surge pack (10KV standard)
- FAO Field adjustable output[9]
- DMG 0-10V dimming extend out back of housing for external control (control ordered separate)[9]
- DS Dual switching[9,12]

Shipped Installed
*Standalone and Networked Sensors/Controls (factory default settings, see table page 9)
- NLTAIR2 PIRHN nLight AIR generation 2, with Networked, Bi-Level motion/ambient sensor[9,13,14,15]
- BAA Buy America(n) Act Compliant
- CCE Coastal Construction[16]

*Note: NLTAIR2 PIRHN with nLight Air can be used as a standalone dimming sensor with out-of-box settings or as a wireless networked solution. See factory default settings table. Sensor coverage pattern is affected when luminaire is tilted.

Shipped Separately (requires some field assembly)
- EGS External glare shield[7]
- EGFV External glare full visor (360° around light aperture)[7]
- BS Bird spikes[17]

Finish

DDBXD Dark Bronze; DBLXD Black; DNAXD Natural Aluminum; DWHXD White; DDBTXD Textured Dark Bronze; DBLBXD Textured Black; DNATXD Textured Natural Aluminum; DWHGXD Textured White

© 2011-2023 Acuity Brands Lighting, Inc. All rights reserved.

Ordering Information

Accessories
Ordered and shipped separately.

RSX2HS	RSX2 House side shield (includes 2 shields)
RSX2EGS (FINISH) U	External glare shield (specify finish)
RSX2HSAFRR (FINISH) U	RSX2 House side shields for AFR rotated optics (includes 2 shields)
RSX2EGFV (FINISH) U	External glare full visor (specify finish)
RSXRPA (FINISH) U	RSX Universal round pole adaptor plate (specify finish)
RSXWBA (FINISH) U	RSX WBA wall bracket (specify finish)[1]
RSXSCB (FINISH) U	RSX Surface conduit box (specify finish, for use with WBA, WBA not included)
DLL127F 1.5 JU	Photocell - SSL twist-lock (120-277V)[18]
DLL347F 1.5 CUL JU	Photocell - SSL twist-lock (347V)[18]
DLL480F 1.5 CUL JU	Photocell - SSL twist-lock (480V)[18]
DSHORT SBK U	Shorting cap[18]

NOTES
1. Any Type 5 distribution, is not available with WBA.
2. MVOLT driver operates on any line voltage from 120-277V (50/60 Hz).
3. HVOLT driver operates on any line voltage from 347-480V (50/60 Hz).
4. XVOLT driver not available with P1. XVOLT driver operates on any line voltage from 277V-480V (50/60 Hz). XVOLT not available with fusing (SF or DF) and not available with PE.
5. Single fuse (SF) requires 120V, 277V or 347V. Double fuse (DF) requires 208V, 240V or 480V.
6. Maximum tilt is 90° above horizontal.
7. It may be ordered as an accessory.
8. Requires MVOLT or 347V.
9. Two or more of the following options cannot be combined including PE, DMG, PER7, FAO, DS and NLTAIR2 PIRHN. (Exception: PE and FAO can be combined; also PE and DMG can be combined.)
10. Compatible with standard twist-lock photocells for dusk to dawn operation or advanced control nodes that provide 0-10V dimming signals. Wire 4/Wire 5 wired to dimming leads on driver. Wire6/Wire7 capped inside luminaire. Twistlock photocell ordered and shipped as a separate line item from Acuity Brands Controls. See accessories. Shorting Cap included.
11. For units with option PER7, the mounting must be restricted to +/- 45° from horizontal aim per ANSI C136.10-2010.
12. DS requires (2) separately switched circuits. DS provides 50/50 fixture operation via (2) different sets of leads using (2) drivers. DS only available with packages P5 and P6.
13. Must be ordered with PIRHN.
14. Requires MVOLT or HVOLT.
15. Must be ordered with NLTAIR2. For additional information on PIRHN visit here.
16. CCE option not available with WBA, WBASC, AASP, AARP, AAWB, AAWBSC, EGS, EGFV and BS.
17. Must be ordered with fixture for factory pre-drilling.
18. Requires luminaire to be specified with PER7 option. Ordered and shipped as a separate line item from Acuity Brands Controls.

External Shields

House Side Shield · External Glare Shield · External 360 Full Visor

Pole/Mounting Information

Accessories including bullhorns, cross arms and other adpaters are available under the accessories tab at Lithonia's Outdoor Poles and Arms product page. Click here to visit Accessories.

HANDHOLE ORIENTATION (C, D, B, A Handhole)

RSX POLE DRILLING — Template #8, Top of Pole: 0.563", 1.325", 2.650", 0.400" (2 PLCS)

RSX STANDARD ARM & ADJUSTABLE ARM: 2.65", 5.25"

Round Tenon Mount - Pole Top Slipfitters

Tenon O.D.	RSX Mounting	Single	2 at 180°	2 at 90°	3 at 120°	3 at 90°	4 at 90°
2-3/8"	RPA, AARP	AS3-5 190	AS3-5 280	AS3-5 290	AS3-5 320	AS3-5 390	AS3-5 490
2-7/8"	RPA, AARP	AST25-190	AST25-280	AST25-290	AST25-320	AST25-390	AST25-490
4"	RPA, AARP	AST35-190	AST35-280	AST35-290	AST35-320	AST35-390	AST35-490

Drill/Side Location by Configuration Type

Drilling Template	Mounting Option	Single	2 @ 180	2 @ 90	3 @ 120	3 @ 90	4 @ 90
	Head Location	Side B	Side B & D	Side B & C	Round Pole Only	Side B, C & D	Side A, B, C & D
#8	Drill Nomenclature	DM19AS	DM28AS	DM29AS	DM32AS	DM39AS	DM49AS

RSX2 - Luminaire EPA

*Includes luminaire and integral mounting arm. Other tenons, arms, brackets or other accessories are not included in this EPA data.

Mounting Type	Tilt	Single	2 @ 90	2 @ 180	3 @ 90	3 @ 120	4 @ 90	2 Side by Side	3 Side by Side	4 Side by Side
SPA - Square Pole Adaptor	0°	0.69	1.22	1.27	1.8	1.61	2.39	1.37	2.06	2.74
RPA - Round Pole Adaptor		0.74	1.27	1.37	1.9	1.71	2.49	1.42	2.16	2.84
MA - Mast Arm Adaptor		0.61	1.14	1.11	1.64	1.45	2.23	1.29	1.9	2.58
IS - Integral Slipfitter AASP/AARP - Adjustable Arm Square/Round Pole	0°	0.69	1.22	1.27	1.8	1.61	2.39	1.37	2.06	2.74
	10°	0.53	1.06	1.05	1.58	1.37	2.08	1.06	1.59	2.12
	20°	0.52	1.02	1.03	1.52	1.33	2.02	1.03	1.55	2.07
	30°	0.64	1.11	1.18	1.63	1.45	2.21	1.27	1.91	2.54
	40°	0.81	1.21	1.35	1.74	1.65	2.39	1.62	2.43	3.23
	45°	0.91	1.25	1.5	1.81	1.75	2.48	1.82	2.73	3.64
	50°	1.34	1.83	2.17	2.61	2.56	3.62	2.68	4.02	5.36
	60°	2.2	2.97	3.57	4.24	4.17	5.89	4.41	6.61	8.82
	70°	2.86	4.13	4.7	5.89	5.71	8.21	5.71	8.57	11.42
	80°	3.4	5.13	5.67	7.34	7.09	10.21	6.79	10.19	13.59
	90°	3.85	5.96	6.55	8.58	8.31	11.88	7.70	11.56	15.41

© 2011-2023 Acuity Brands Lighting, Inc. All rights reserved.

Photometric Diagrams

To see complete photometric reports or download .ies files for this product, visit Lithonia Lighting's RSX Area homepage.

Isofootcandle plots for the RSX2 LED P6 40K. Distances are in units of mounting height (30').

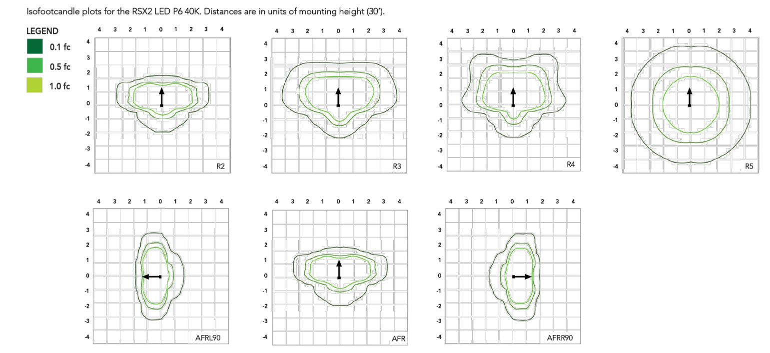

Performance Data

Lumen Ambient Temperature (LAT) Multipliers

Use these factors to determine relative lumen output for average ambient temperatures from 0-50°C (32-122°F).

Ambient	Ambient	Lumen Multiplier
0°C	32°F	1.05
5°C	41°F	1.04
10°C	50°F	1.03
15°C	59°F	1.02
20°C	68°F	1.01
25°C	77°F	1.00
30°C	86°F	0.99
35°C	95°F	0.98
40°C	104°F	0.97
45°C	113°F	0.96
50°C	122°F	0.95

Electrical Load

Performance Package	System Watts (W)	Current (A) 120V	208V	240V	277V	347V	480V
P1	71W	0.59	0.34	0.30	0.26	0.20	0.15
P2	111W	0.93	0.53	0.46	0.40	0.32	0.23
P3	147W	1.23	0.70	0.61	0.53	0.42	0.31
P4	187W	1.55	0.90	0.78	0.68	0.53	0.38
P5	210W	1.75	1.01	0.87	0.76	0.60	0.44
P6	244W	2.03	1.17	1.01	0.88	0.70	0.51

Projected LED Lumen Maintenance

Operating Hours	50,000	75,000	100,000
Lumen Maintenance Factor	>0.97	>0.95	>0.92

Values calculated according to IESNA TM-21-11 methodology and valid up to 40°C.

© 2011-2023 Acuity Brands Lighting, Inc. All rights reserved.

Performance Data

Lumen Output

Lumen values are from photometric tests performed in accordance with IESNA LM-79-08. Data is considered to be representative of the configurations shown, within the tolerances allowed by Lighting Facts. Contact factory for performance data on any configurations not shown here.

Performance Package	System Watts	Distribution Type	30K Lumens	B	U	G	LPW	40K Lumens	B	U	G	LPW
P1	71W	R2	10,040	2	0	1	139	11,031	2	0	1	153
		R3	10,005	2	0	2	141	10,992	2	0	2	155
		R3S	10,271	2	0	2	143	11,285	2	0	2	157
		R4	10,136	2	0	2	143	11,136	2	0	2	157
		R4S	9,779	2	0	2	138	10,744	2	0	2	151
		R5	10,271	4	0	2	145	11,285	4	0	2	159
		R5S	10,544	3	0	1	149	11,585	3	0	2	163
		AFR	10,026	2	0	1	141	11,016	2	0	1	155
		AFRR90	10,122	3	0	2	140	11,121	3	0	2	154
		AFRL90	10,164	3	0	2	141	11,167	3	0	2	155
P2	111W	R2	15,712	2	0	2	138	17,263	2	0	2	151
		R3	15,657	2	0	3	141	17,202	3	0	3	155
		R3S	16,075	2	0	2	141	17,661	2	0	2	155
		R4	15,862	2	0	3	143	17,427	2	0	3	157
		R4S	15,304	2	0	2	138	16,815	2	0	2	151
		R5	16,075	4	0	2	145	17,661	5	0	3	159
		R5S	16,502	4	0	2	149	18,130	4	0	2	163
		AFR	15,691	2	0	2	141	17,240	2	0	2	155
		AFRR90	15,841	3	0	3	139	17,404	4	0	3	153
		AFRL90	15,907	3	0	3	139	17,477	4	0	3	153
P3	147W	R2	19,855	3	0	2	132	21,814	3	0	2	145
		R3	19,785	3	0	3	135	21,737	3	0	4	148
		R3S	20,312	3	0	3	135	22,317	3	0	3	149
		R4	20,044	3	0	3	136	22,022	3	0	4	150
		R4S	19,339	3	0	3	132	21,247	3	0	3	145
		R5	20,313	5	0	3	138	22,317	5	0	3	152
		R5S	20,852	4	0	2	142	22,910	4	0	2	156
		AFR	19,828	3	0	2	135	21,785	3	0	2	148
		AFRR90	20,017	4	0	3	133	21,992	4	0	3	147
		AFRL90	20,101	4	0	3	134	22,084	4	0	3	147
P4	187W	R2	22,836	3	0	2	120	25,090	3	0	2	132
		R3	22,756	3	0	4	122	25,002	3	0	4	134
		R3S	23,363	3	0	3	123	25,668	3	0	3	135
		R4	23,054	3	0	4	123	25,329	3	0	4	135
		R4S	22,243	3	0	3	119	25,059	3	0	3	134
		R5	23,363	5	0	3	125	25,669	5	0	4	137
		R5S	23,983	4	0	2	128	26,350	4	0	2	141
		AFR	22,806	3	0	2	122	25,056	3	0	2	134
		AFRR90	23,023	4	0	3	121	25,295	4	0	3	133
		AFRL90	23,120	4	0	3	122	25,401	4	0	3	134
P5	210W	R2	26,141	3	0	2	122	28,721	3	0	2	135
		R3	26,049	3	0	4	124	28,620	3	0	4	136
		R3S	26,744	3	0	3	125	29,383	3	0	4	138
		R4	26,390	3	0	4	126	28,994	3	0	4	138
		R4S	25,462	3	0	3	121	27,974	3	0	3	133
		R5	26,744	5	0	4	127	29,383	5	0	4	140
		R5S	27,454	4	0	2	131	30,163	4	0	2	144
		AFR	26,106	3	0	2	124	28,682	3	0	2	137
		AFRR90	26,354	4	0	3	123	28,955	5	0	3	136
		AFRL90	26,465	4	0	3	124	29,077	5	0	3	136
P6	244W	R2	27,646	3	0	2	112	30,374	3	0	2	123
		R3	27,549	3	0	4	113	30,267	3	0	4	124
		R3S	28,283	3	0	4	115	31,075	3	0	4	126
		R4	27,909	3	0	4	114	30,663	3	0	4	126
		R4S	26,928	3	0	3	110	29,585	3	0	3	121
		R5	28,284	5	0	4	116	31,075	5	0	4	127
		R5S	29,035	4	0	2	119	31,900	5	0	3	131
		AFR	27,608	3	0	2	112	30,332	3	0	2	123
		AFRR90	27,872	4	0	3	113	30,622	5	0	3	124
		AFRL90	27,989	4	0	3	113	30,751	5	0	3	125

50K (5000K, 70 CRI) columns: same values as 40K (4000K, 70 CRI).

© 2011-2023 Acuity Brands Lighting, Inc. All rights reserved.

Dimensions & Weights

Luminaire Weight by Mounting Type

Mounting Configuration	Total Luminaire Weight
SPA	30 lbs
RPA	32 lbs
MA	30 lbs
WBA	33 lbs
WBASC	36 lbs
IS	33 lbs
AASP	33 lbs
AARP	35 lbs
AAWB	36 lbs
AAWSC	39 lbs

RSX2 with Round Pole Adapter (RPA)

Length: 30.3" (77.0 cm)
Width: 13.4" (34.0 cm)
Height: 3.0" (7.6 cm) Main Body; 7.2" (18.3 cm) Arm

Note: RPA — Round Pole mount can also be used to mount on square poles by omitting the round pole adapter plate shown here.

RSX2 with Mast Arm Adapter (MA)

7/16" locking thru bolt/nut provided

Length: 30.6" (77.7 cm)
Width: 13.4" (34.0 cm)
Height: 3.0" (7.6 cm) Main Body; 3.5" (8.9 cm) Arm

RSX2 with Adjustable Slipfitter (IS)

7/8" KO - fits 1/2" NPT water- tight fitting

Length: 28.3" (71.9 cm)
Width: 13.4" (34.0 cm)
Height: 3.0" (7.6 cm) Main Body; 7.6" (19.3 cm) Arm

© 2011-2023 Acuity Brands Lighting, Inc. All rights reserved.

nLight Control - Sensor Coverage and Settings

NLTAIR2 PIRHN nLight Sensor Coverage Pattern
nLight PIRHN

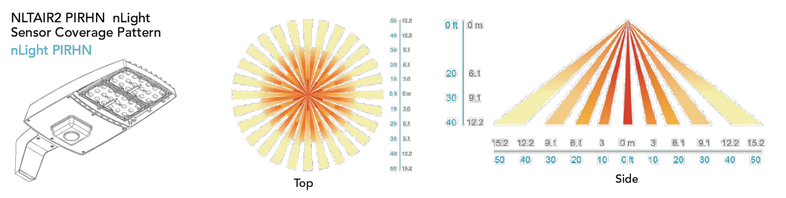

Option	Dimmed State (unoccupied)	High Level (when occupied)	Photocell Operation	Dwell Time (occupancy time delay)	Ramp-up Time (from unoccupied to occupied)	Ramp-down Time (from occupied to unoccupied)
NLTAIR2 PIRHN	Approx. 30% Output	100% Output	Enabled @ 1.5FC	7.5 minutes	3 seconds	5 minutes

Motion Sensor Default Settings - Option PIRHN

*Note: NLTAIR2 PIRHN default settings including photocell set-point, high/low dim rates, and occupancy sensor time delay are all configurable using the Clairity Pro App. Sensor coverage pattern shown with luminaire at 0°. Sensor coverage pattern is affected when luminaire is titled.

FEATURES & SPECIFICATIONS

INTENDED USE
The RSX LED area family is designed to provide a long-lasting, energy-efficient solution for the one-for-one replacement of existing metal halide or high pressure sodium lighting. The RSX2 delivers 11,000 to 31,000 lumens and is ideal for replacing 250W to 1000W HID pole-mounted luminaires in parking lots and other area lighting applications.

CONSTRUCTION AND DESIGN
The RSX LED area luminaire features a rugged die-cast aluminum main body that uses heat-dissipating fins and flow-through venting to provide optimal thermal management that both enhances LED performance and extends component life. Integral "no drill" mounting arm allows the luminaire to be mounted on existing pole drillings, greatly reducing installation labor. The light engines and housing are sealed against moisture and environmental contaminants to IP66. The low-profile design results in a low EPA, allowing pole optimization. Vibration rated per ANSI C136.31: 3G Mountings: Include SPA, RPA, MA, IS, AASP, AARP rated for 3G vibration. 1.5G Mountings: Include WBA, WBASC, AAWB and AAWSC rated for 1.5G vibration.

FINISH
Exterior parts are protected by a zinc-infused Super Durable TGIC thermoset powder coat finish that provides superior resistance to corrosion and weathering. A tightly controlled multi-stage process ensures superior adhesion as well as a minimum finish thickness of 3 mils. The result is a high-quality finish that is warrantied not to crack or peel.

OPTICS
Precision acrylic refractive lenses are engineered for superior application efficiency, distributing the light to where it is needed most. Available in short and wide pattern distributions including Type 2, Type 3, Type 3S, Type 4, Type 4S, Type 5, Type 5S, AFR (Automotive Front Row) and AFR rotated AFRR90 and ARFL90.

COASTAL CONSTRUCTION (CCE)
Optional corrosion resistant construction is engineered with added corrosion protection in materials and/or pre-treatment of base material under super durable paint. Provides additional corrosion protection for applications near coastal areas. Finish is salt spray tested to over 5,000 hours per ASTM B117 with scribe rating of 10. Additional lead-times apply.

ELECTRICAL
Light engine(s) configurations consist of high-efficacy LEDs mounted on metal-core circuit boards and aluminum heat sinks to maximize heat dissipation. Light engines are IP66 rated. LED lumen maintenance is >L92/100,000 hours. CCT's of 3000K, 4000K and 5000K (minimum 70 CRI) are available. Fixtures ship standard with 0-10v dimming driver. Class 1 electronic drivers ensure system power factor >90% and THD <20%. Easily serviceable 10kV surge protection device meets a minimum Category C Low operation (per ANSI/IEEE C62.41.2).

STANDARD CONTROLS
The RSX LED area luminaire has a wide assortment of control options. Dusk to dawn controls include MVOLT and 347V button-type photocells and NEMA twist-lock photocell receptacles.

nLIGHT AIR CONTROLS
The RSX LED area luminaire is also available with nLight® AIR for the ultimate in wireless control. This powerful controls platform provides out-of-the-box basic motion sensing with photocontrol functionality and is suitable for mounting heights up to 40 feet. No commissioning is required when using factory default settings that provide basic stand-alone motion occupancy dimming that is switched on and off with a built-in photocell. See chart above for motion sensor default out-of-box settings. For more advanced wireless functionality, such as group dimming, nLight AIR can be commissioned using a smartphone and the easy-to-use CLAIRITY app. nLight AIR equipped luminaries can be grouped, resulting in motion sensor and photocell group response without the need for additional equipment. Scheduled dimming with motion sensor over-ride can be achieved when used with the nLight Eclypse. Additional information about nLight Air can be found here.

INSTALLATION
Integral "no-drill" mounting arm allows for fast, easy mounting using existing pole drillings. Select the "SPA" option for square poles and the "RPA" option to mount to round poles. Note, the RPA mount can also be used for mounting to square poles by omitting the RPA adapter plate. Select the "MA" option to attach the luminaire to a 2 3/8" horizontal mast arm or the "IS" option for an adjustable slipfitter that mounts on a 2 3/8" OD tenon. The adjustable slipfitter has an integral junction box and offers easy installation. Can be tilted up to 90° above horizontal. Additional mountings are available including a wall bracket, adjustable tilt arm for direct-to-pole and wall and a surface conduit box for wall mount applications.

LISTINGS
CSA Certified to meet U.S. and Canadian standards. Suitable for wet locations. Rated for -40°C minimum ambient. DesignLights Consortium® (DLC) Premium qualified product and DLC qualified product. Not all versions of this product may be DLC Premium qualified or DLC qualified. Please check the DLC Qualified Products List at www.designlights.org/QPL to confirm which versions are qualified.
International Dark-Sky Association (IDA) Fixture Seal of Approval (FSA) is available for all products on this page utilizing 3000K color temperature only. US Patent No. D882, 146S

BUY AMERICAN ACT
Product with the BAA option is assembled in the USA and meets the Buy America(n) government procurement requirements under FAR, DFARS and DOT regulations.
Please refer to www.acuitybrands.com/buy-american for additional information.

WARRANTY
5-year limited warranty. This is the only warranty provided and no other statements in this specification sheet create any warranty of any kind. All other express and implied warranties are disclaimed. Complete warranty terms located at: www.acuitybrands.com/support/warranty/terms-and-conditions

Note: Actual performance may differ as a result of end-user environment and application. All values are design or typical values, measured under laboratory conditions at 25 °C. Specifications subject to change without notice.

© 2011-2023 Acuity Brands Lighting, Inc. All rights reserved.

Dimensions

RSX2 with Wall Bracket (WBA)

Length: 31.2" (79.2 cm)
Width: 13.4" (41.7 cm)
Height: 3.0" (7.6 cm) Main Body; 8.9" (22.6 cm) Arm

Wall Bracket (WBA) Mounting Detail

RSX2 with Wall Bracket with Surface Conduit Box (WBASC)

3/4" NPT taps with plugs - Qty (4) provided

Length: 32.8" (83.3 cm)
Width: 13.4" (41.7 cm)
Height: 3.0" (7.6 cm) Main Body; 9.2" (23.4 cm) Arm

Surface Conduit Box (SCB) Mounting Detail

© 2011-2023 Acuity Brands Lighting, Inc. All rights reserved.

Dimensions

RSX2 with Adjustable Tilt Arm - Square or Round Pole (AASP or AARP)

7/8" KO - fits 1/2" NPT water- tight fitting

Length: 32.8" (83.3 cm) AASP; 33.8" (85.9 cm) AARP
Width: 13.4" (34.0 cm)
Height: 3.0" (7.6 cm) Main Body; 7.2" (18.2 cm) Arm

NOTE: RPA - Round Pole mount can also be used to mount on square poles by omitting the round pole adapter plate shown here.

Notes
AASP: Requires 3.0" min. square pole for 1 at 90°. Requires 3.5" min. square pole for mounting 2, 3, 4 at 90°.
AARP: Requires 3.2" min. dia. round pole for 2, 3, 4 at 90°. Requires 3.0" min. dia. round pole for mounting 1 at 90°, 2 at 180°, 3 at 120°.

RSX2 with Adjustable Tilt Arm with Wall Bracket (AAWB)

7/8" KO - fits 1/2" NPT water- tight fitting

Wall Bracket (WBA) Mounting Detail

Length: 34.7" (88.0 cm)
Width: 13.4" (34.0 cm)
Height: 3.0" (7.6 cm) Main Body; 8.9" (22.6 cm) Arm

© 2011-2023 Acuity Brands Lighting, Inc. All rights reserved.

Dimensions

RSX2 with Adjustable Tilt Arm with Wall Bracket and Surface Conduit Box (AAWSC)

3/4" NPT taps with plugs - Qty (4) provided

7/8" KO - fits 1/2" NPT water- tight fitting

Length: 36.2" (91.9 cm)
Width: 13.4" (40.0 cm)
Height: 3.0" (7.6 cm) Main Body; 9.2" (23.4 cm) Arm

Surface Conduit Box (SCB) Mounting Detail

Automotive Front Row - Rotated Optics (AFRL90/R90): AFRR90, AFRL90

(Example: 2@180 - arrows indicate direction of light exiting the luminaire)

© 2011-2023 Acuity Brands Lighting, Inc. All rights reserved.

SSS Square Straight Steel Poles

ORDERING INFORMATION — Lead times will vary depending on options selected. Consult with your sales representative.

Example: SSS 20 5C DM19 DDBXD

Series	Nominal fixture mounting height	Nominal shaft base size/wall thickness[1]	Mounting[2]	Options	Finish
SSS	10'-39' (for 1/2 ft increments, add -6 to the pole height. Ex: 20-6 equals 20ft 6in.) (See technical information table for complete ordering information.) 25FT.	4C 4" 11g (0.120"); 4G 4" 7g (0.179"); 5C 5" 11g (0.120"); 5G 5" 7g (0.179"); 6G 6" 7g (0.179") (See technical information table for complete ordering information.)	Tenon mounting: PT Open top (includes top cap); T20 2-3/8" O.D. (2" NPS); T25 2-7/8" O.D. (2-1/2" NPS); T30 3-1/2" O.D. (3" NPS); T35 4" O.D. (3-1/2" NPS). KAC/KAD/KSE/KSF/KVR/KVF Drill mounting[3]: DM19 1 at 90°; DM28 2 at 180°; DM28 PL 2 at 180° with one side plugged; DM29 2 at 90°; DM39 3 at 90°; DM49 4 at 90°. CSX/DSX/RSX/AERIS™/OMERO™/KAX Drill mounting[3]: DM19AS 1 at 90° SINGLE; DM28AS 2 at 180° TWIN; DM29AS 2 at 90°; DM39AS 3 at 90°; DM49AS 4 at 90°. RAD drill mounting[3]: DM19RAD 1 at 90°; DM28RAD 2 at 180°; DM29RAD 2 at 90°; DM39RAD 3 at 90°; DM49RAD 4 at 90°. ESX Drill mounting[3]: DM19ESX 1 at 90°; DM28ESX 2 at 180°; DM29ESX 2 at 90°; DM39ESX 3 at 90°; DM49ESX 4 at 90°	Shipped installed: VD Vibration damper[4]; HAxy Horizontal arm bracket (1 fixture)[5,6]; FDLxy Festoon outlet less electrical[5,7]; CPL12/xy 1/2" coupling[5]; CPL34/xy 3/4" coupling[5]; CPL1/xy 1" coupling[5]; NPL12/xy 1/2" threaded nipple[5]; NPL34/xy 3/4" threaded nipple[5]; NPL1/xy 1" threaded nipple[5]; EHHxy Extra handhole[5,8]; STLHHC Steel handhole cover (standard is plastic, finish is smooth)[9]; FBCSTL2PC 2 Piece steel base cover (standard is plastic)[9]; IC Interior coating[10]; L/AB Less anchor bolts (Include when anchor bolts are not needed); TP Tamper resistant handhole cover fasteners; NEC NEC 410.30 compliant gasketed handhole (Not UL Labeled); UL UL listed with label (Includes NEC compliant cover); BAA Buy America(n) Act Compliant[11]; VM/original order# Match pole to prior order or project[12]	Super durable paint colors: DDBXD Dark bronze; DBLXD Black; DNAXD Natural aluminum; DWHXD White; DSSXD Sandstone; DGCXD Charcoal gray; DTGXD Tennis green; DBRXD Bright red; DSBXD Steel blue; DDBTXD Textured dark bronze; DBLBXD Textured black; DNATXD Textured natural aluminum; DWHGXD Textured white. Other finishes: GALV Galvanized finish. Architectural colors and special finishes[13]: [PAINT] GALV Paint over galvanizing; VP30 3 year warranty extension; VP53 5 year warranty extension; RAL#### Use designated Lithonia Lighting nomenclature in brochure; Custom color Nomenclature assigned through Customer Care "Custom Color Process"

NOTES:
1. Wall thickness will be signified with a "C" (11 Gauge) or a "G" (7-Gauge) in nomenclature. "C" - 0.120" | "G" - 0.179".
2. PT open top poles include top cap. When ordering tenon mounting and drill mounting for the same pole, specify as drilling option/tenon option. The combination includes a required extra handhole. Example: DM28/T20.
3. Refer to the fixture spec sheet for the correct drilling template pattern and orientation compatibility.
4. On 4" and 5" poles, VD cannot be installed if provisions (EHH, FDL, NPL, CPL) are located higher than 2/3 of the pole's total height. Example: Pole height is 25ft, A provision cannot be placed above 16ft.
5. Specify location and orientation when ordering option. For "x": Specify the height above the base of pole in feet or feet and inches; separate feet and inches with a "-". Example: 5ft = 5 and 20ft 3in = 20-3. For "y": Specify orientation from handhole (A,B,C,D) Refer to the Handhole Orientation diagram below. Example: 1/2" coupling at 5' 8", orientation C = CPL12/5-8C
6. Horizontal arm is 18" x 2-3/8" O.D. tenon standard, with radius curve providing 12" rise and 2-3/8" O.D. If ordering two horizontal arm at the same height, specify with HAxy. Example: HA20BD.
7. FDL does not come with GFCI outlet or handhole cover. These must be supplied by contractor or electrician.
8. Combination of tenon-top and drill mount includes extra handhole. EHH includes cover.
9. Plastic hand hole cover and base covers come standard with all poles. Items ship separately. Additional parts can be ordered as replacements.
10. Provides enhanced corrosion resistance. N/A with GALV.
11. Use when mill certifications are required.
12. Must add original order number. Not for replacement parts or post sales issues, contact tech support or post sales teams. VM is used to ensure poles match in appearance exactly from order to order, on a single project site. A common use case would be a multi-phase project with multiple orders. Example: VM/010-36784
13. Must be quoted through AQD. Finishes do not require RFA. RAL colors available are shown in "Architectural Colors brochure". Lead times may be extended up to 2 weeks due to paint procurement.

Accessories: Order as separate catalog number.

PL DT20	Plugs for ESX drillings
PL DT8	Plugs for DMxxAS drillings
FVD xxFT	Field installed vibration damper (snake style)

©1994-2024 Acuity Brands Lighting, Inc. All rights reserved.

SSS Square Straight Steel Poles

TECHNICAL INFORMATION — EPA (ft²) with 1.3 gust

Catalog Number	Nominal Shaft Length (ft.)*	Pole Shaft Size (Base in. x Top in. x ft.)	Wall thick (in)	Gauge	80 MPH	Max. weight	90 MPH	Max. weight	100 MPH	Max. weight	Approximate ship weight (lbs.)
SSS 10 4C	10	4.0 x 10.0	0.120"	11	30.6	765	23.8	595	18.9	473	75
SSS 12 4C	12	4.0 x 12.0	0.120"	11	24.4	610	18.8	470	14.8	370	90
SSS 14 4C	14	4.0 x 14.0	0.120"	11	19.9	498	15.1	378	11.7	293	100
SSS 16 4C	16	4.0 x 16.0	0.120"	11	15.9	398	11.8	295	8.9	223	115
SSS 18 4C	18	4.0 x 18.0	0.120"	11	12.6	315	9.2	230	6.7	168	125
SSS 20 4C	20	4.0 x 20.0	0.120"	11	9.6	240	6.7	167	4.5	150	140
SSS 20 4G	20	4.0 x 20.0	0.179"	7	14	350	11	275	8	200	198
SSS 20 5C	20	5.0 x 20.0	0.120"	11	17.7	443	12.7	343	9.4	235	185
SSS 20 5G	20	5.0 x 20.0	0.179"	7	28.1	703	21.4	535	16.2	405	265
SSS 25 4C	25	4.0 x 25.0	0.120"	11	4.8	150	2.6	100	1	50	170
SSS 25 4G	25	4.0 x 25.0	0.179"	7	10.8	270	7.7	188	5.4	135	245
SSS 25 5C	25	5.0 x 25.0	0.120"	11	9.8	245	6.3	157	3.7	150	225
SSS 25 5G	25	5.0 x 25.0	0.179"	7	18.5	463	13.3	333	9.5	238	360
SSS 30 4G	30	4.0 x 30.0	0.179"	7	6.7	168	4.4	110	2.6	65	295
SSS 30 5C	30	5.0 x 30.0	0.120"	11	4.7	150	2	50	--	--	265
SSS 30 5G	30	5.0 x 30.0	0.179"	7	10.7	267	6.7	167	3.9	100	380
SSS 30 6G	30	6.0 x 30.0	0.179"	7	19	475	13.2	330	9	225	520
SSS 35 5G	35	5.0 x 35.0	0.179"	7	5.9	150	2.5	100	--	--	440
SSS 35 6G	35	6.0 x 35.0	0.179"	7	12.4	310	7.6	190	4.2	105	540
SSS 39 6G	39	6.0 x 39.0	0.179"	7	7.2	180	3	75	--	--	605

NOTE: EPA values are based ASCE 7-93 wind map.
* For 1/2 ft increments, add -6 to the pole height. Ex: 20-6 equals 20ft 6in.

TECHNICAL INFORMATION — EPA (ft²) WITH 3-SECOND GUST PER AASHTO 2013

Series	Mounting Height (ft)*	Shaft Base Size	90 MPH	Max. weight	100 MPH	Max. weight	110 MPH	Max. weight	120 MPH	Max. weight	130 MPH	Max. weight	140 MPH	Max. weight	150 MPH	Max. weight	Approximate ship weight (lbs.)
SSS	10	4C	20	500	16	400	13	325	10.5	263	8.5	213	7	175	6	150	75
SSS	12	4C	16	400	13	325	10	250	8	200	6.5	163	5	125	4	100	90
SSS	14	4C	13.5	338	10	250	7.5	188	6	150	4.5	113	3.5	88	2.5	63	100
SSS	16	4C	10.5	263	7.5	188	5.5	138	4	100	3	75	1.5	38	1	25	115
SSS	18	4C	8	200	5.5	138	4	100	2.5	63	1.5	38	0.5	13	-	-	125
SSS	18	4G	13	325	9.5	238	7	175	5	125	3.5	88	2.5	63	1.5	38	185
SSS	18	5C	13	325	9.5	238	6.5	163	4.5	113	3	75	1.5	38	.5	13	170
SSS	20	4C	6	150	4	100	2.5	63	1	25	-	-	-	-	-	-	140
SSS	20	4G	10.5	263	7.5	188	5.5	138	3.5	88	2	50	1	25			205
SSS	20	5C	10	250	7	175	4.5	113	2.5	63	1	25	-	-	-	-	185
SSS	20	5G	20	500	15	375	11.5	288	8.5	213	6	150	4.5	113	3	75	265
SSS	25	4C	2	50	0.5	13	-	-	-	-	-	-	-	-	-	-	170
SSS	25	4G	5.5	138	3	75	1.5	38	-	-	-	-	-	-	-	-	245
SSS	25	5C	4.5	113	2	50	-	-	-	-	-	-	-	-	-	-	225
SSS	25	5G	12	300	8.5	213	5.5	138	3	75	1.5	38	-	-	-	-	360
SSS	25	6G	19	475	13.5	338	9	225	5.5	138	3	75	1	25			445
SSS	30	4G	1.5	38	-	-	-	-	-	-	-	-	-	-	-	-	291
SSS	30	5C	-	-	-	-	-	-	-	-	-	-	-	-	-	-	265
SSS	30	5G	6.5	163	3.5	88	1	25	-	-	-	-	-	-	-	-	380
SSS	30	6G	11	275	6	150	2.5	63	-	-	-	-	-	-	-	-	520
SSS	35	5G	2	50	-	-	-	-	-	-	-	-	-	-	-	-	440
SSS	35	6G	4	100	-	-	-	-	-	-	-	-	-	-	-	-	540
SSS	39	6G	-	-	-	-	-	-	-	-	-	-	-	-	-	-	605

NOTE: AASHTO 2013 criteria is the most conservative existing EPA calculation. For poles not showing EPA values under AASHTO 2013, EPA values may exist under commercial criteria (see table above).
*For 1/2 ft increments, add -6 to the pole height. Ex: 20-6 equals 20ft 6in.

©1994-2024 Acuity Brands Lighting, Inc. All rights reserved.

SSS Square Straight Steel Poles

BASE DETAIL

ANCHORAGE AND TEMPLATE INFORMATION

Shaft base size	Bolt circle A	Bolt projection B	Base square C	Base plate thickness	Template description	Anchor bolt description	Bolt size (in. x in. x in.)	Anchor bolt and template description
4"C	8" – 9"	3.25"- 3.75"	8"- 8.25"	0.75"	ABTEMPLATE PJ50004	AB18-0	3/4 x 18 x 3	ABSSS-4C
4"G	8" – 9"	3.38"- 3.75"	8"- 8.25"	0.875"	ABTEMPLATE PJ50004	AB30-0	3/4 x 30 x 3	ABSSS-4G
5"	10" – 12"	3.5"- 4"	11"	1"	ABTEMPLATE PJ50010	AB36-0	1 x 36 x 4	ABSSS-5
6"	11" – 13"	4"- 4.50"	12.5"	1"	ABTEMPLATE PJ50011	AB36-0	1 x 36 x 4	N/A

HANDHOLE ORIENTATION (C, D, B, A Handhole; Default DM19 is on side B.)

IMPORTANT INSTALLATION NOTES:
- **Do not** erect poles without having fixtures installed.
- Factory-supplied templates must be used when setting anchor bolts. Lithonia Lighting will not accept claim for incorrect anchorage placement due to failure to use Lithonia Lighting factory templates.
- If poles are stored outside, all protective wrapping must be removed immediately upon delivery to prevent finish damage.
- Lithonia Lighting is not responsible for the foundation design.
- Bolt circles have +/- 1/2" tolerance.

CAUTION: These specifications are intended for general purposes only. Lithonia Lighting reserves the right to change material or design, without prior notice, in a continuing effort to upgrade its products.

©1994-2024 Acuity Brands Lighting, Inc. All rights reserved.

LITHONIA LIGHTING

Catalog Number:
Notes: FREDDY'S MT. DORA, FL.
Type: 25FT. 4" SQUARE POLE

Anchor Base Poles
SSS
SQUARE STRAIGHT STEEL
BAA BABA

FEATURES & SPECIFICATIONS

INTENDED USE — These specifications are for USA standards only. Square Straight Steel is a general purpose light pole for up to 39-foot mounting heights. This pole provides a robust yet cost effective option for mounting area lights and floodlights.

CONSTRUCTION —

Pole Shaft: The pole shaft is of uniform dimension and wall thickness and is made of a weldable-grade, hot-rolled, commercial-quality steel tubing with a minimum yield of 55 KSI (11-gauge, 0.120"), or 50 KSI (7-gauge, 0.179"). Shaft is one-piece with a full-length longitudinal high-frequency electric resistance weld. Uniformly square in cross-section with flat sides, small corner radii and excellent torsional qualities. Available shaft widths are 4", 5" and 6".

Pole Top: Options include 4" tenon top, drilled for side mount fixture, tenon with drilling (includes extra handhole) and open top. Side drilled and open top poles include a removable top cap.

Handhole: A reinforced handhole with grounding provision is provided at 18" from the base on side A. Positioning the handhole lower may not be possible and requires engineering review; consult Tech Support-Outdoor for further information. Every handhole includes a cover and cover attachment hardware. The handhole has a nominal dimension of 2.5" x 5".

Base Cover: A durable ABS plastic two-piece full base cover, finished to match the pole, is provided with each pole assembly. Additional base cover options are available upon request.

Anchor Base/Bolts: Anchor base is fabricated from steel that meets ASTM A36 standards and can be altered to match existing foundations; consult factory for modifications. Anchor bolts are manufactured to ASTM F1554 Standards grade 55, (55 KSI minimum yield strength and tensile strength of 75-95 KSI). Top threaded portion (nominal 12") is hot-dipped galvanized per ASTM A-153.

HARDWARE — All structural fasteners are high-strength galvanized carbon steel. All non-structural fasteners are galvanized or zinc-plated carbon steel or stainless steel.

FINISH — Extra durable painted finish is coated with TGIC (Triglycidyl Isocyanurate) Polyester powder that meets 5A and 5B classifications of ASTM D3359. Powder-coat finishes include Dark Bronze, White, Black, and Natural Aluminum colors. Architectural Colors and Special Finishes are available by quote and include, but are not limited to Paint over Hot-dipped Galvanized, RAL Colors, Custom Colors and Extended Warranty Finishes.

GOVERNEMENT PROCUREMENT —
BAA – Buy America(n) Act: Product qualifies as a domestic end product under the Buy American Act as implemented in the FAR and DFARS. Product also qualifies as manufactured in the United States under DOT Buy America regulations.
BABA – Build America Buy America: Product qualifies as produced in the United States under the definitions of the Build America, Buy America Act.
Please refer to www.acuitybrands.com/buy-american for additional information.

INSTALLATION — **Do not** erect poles without having fixtures installed. Factory-supplied templates must be used when setting anchor bolts. Lithonia Lighting will not accept claim for incorrect anchorage placement due to failure to use Lithonia Lighting factory templates. If poles are stored outside, all protective wrapping must be removed immediately upon delivery to prevent finish damage. Lithonia Lighting is not responsible for the foundation design.

WARRANTY — 1-year limited warranty. This is the only warranty provided and no other statements in this specification sheet create any warranty of any kind. All other express and implied warranties are disclaimed. Complete warranty terms located at: www.acuitybrands.com/support/warranty/terms-and-conditions

NOTE: Actual performance may differ as a result of end-user environment and application. Specifications subject to change without notice.

NO.	DATE	DESCRIPTION
1	11/21/2024	REVISED PER SJRWMD & CITY OF MOUNT DORA COMMENTS

REVISION BLOCK

SANTOS MEDINA, III, P.E.
STATE OF FLORIDA
PROFESSIONAL ENGINEER
LICENSE NO. 74539

This item has been digitally signed and sealed by the engineer on the date indicated hereon. Printed copies of this document are not considered signed and sealed. Signature must be verified on any electronic copies.
11/21/2024
NOT VALID UNLESS PHYSICALLY, DIGITALLY, OR ELECTRONICALLY SIGNED AND SEALED

DESIGNED BY: SM
DRAWN BY: DH
CHECKED BY: SM

SLOAN Engineering Group
150 SOUTH WOODLAWN AVENUE, BARTOW, FL 33830
PHONE: (863) 800-3046 - FAX: (863) 800-1159
FLORIDA CERTIFICATE OF AUTHORIZATION (FLCA) #26247

CLIENT: EUDORA ROAD, LLC
PROJECT: FREDDY'S FROZEN CUSTARD - MOUNT DORA

LIGHTING POLE & FIXTURE DETAILS

2495 EUDORA RD, MT DORA, FLORIDA 32757

PROJECT NO.: 2575
SHEET: C502

X:\Engineering\2575-FFC of Central Florida-Freddy's Frozen Custard-Mt Dora\cad\2575 Base.dwg, C502-Lighting Pole & Fixture Details, 11/21/2024 8:52:22 AM, dharper, 1:1

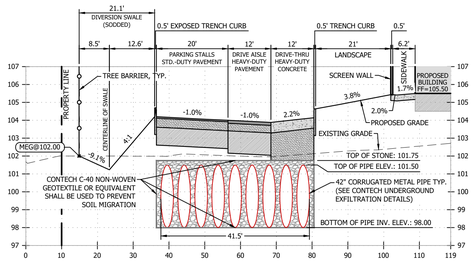

SECTION A
VERT. SCALE: 1" = 2'
HORIZ. SCALE: 1" = 10'

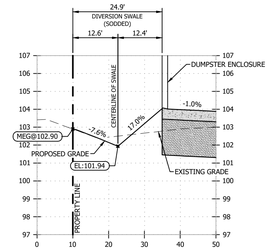

SECTION G
VERT. SCALE: 1" = 2'
HORIZ. SCALE: 1" = 10'

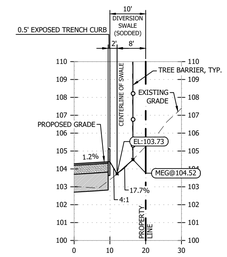

SECTION H
VERT. SCALE: 1" = 2'
HORIZ. SCALE: 1" = 10'

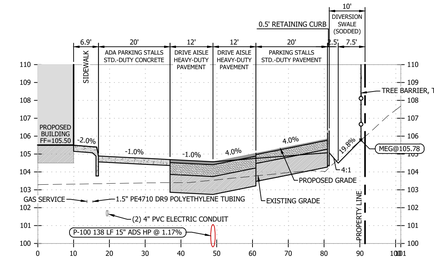

SECTION B
VERT. SCALE: 1" = 2'
HORIZ. SCALE: 1" = 10'

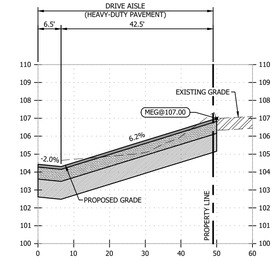

SECTION C
VERT. SCALE: 1" = 2'
HORIZ. SCALE: 1" = 10'

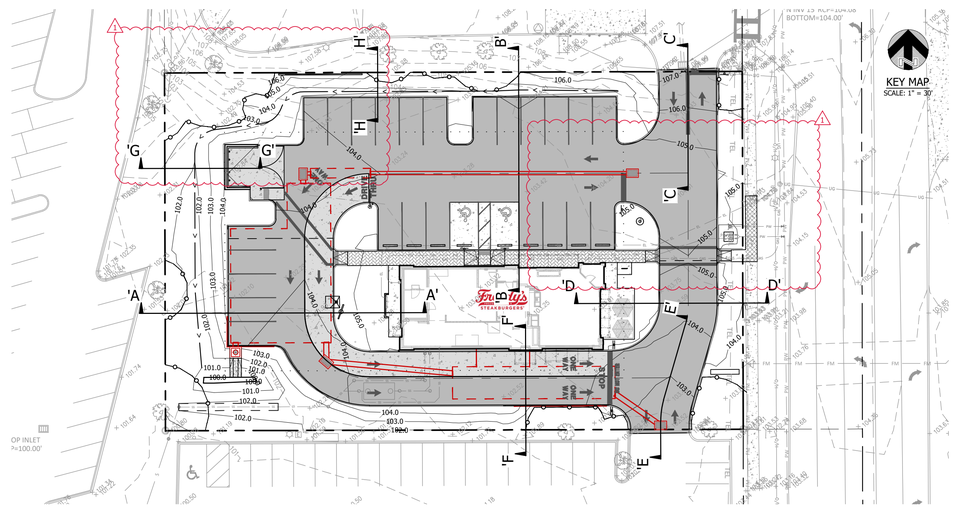

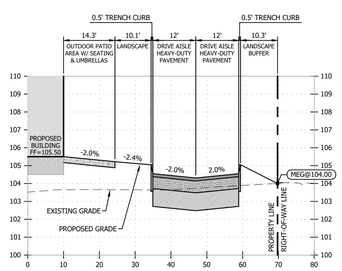

SECTION D
VERT. SCALE: 1" = 2'
HORIZ. SCALE: 1" = 10'

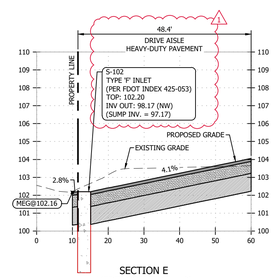

SECTION E
VERT. SCALE: 1" = 2'
HORIZ. SCALE: 1" = 10'

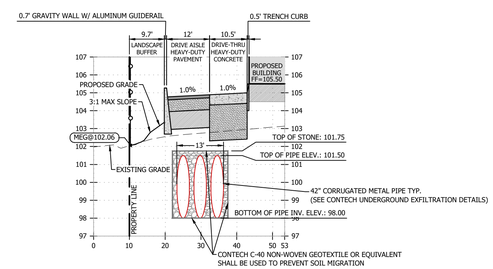

SECTION F
VERT. SCALE: 1" = 2'
HORIZ. SCALE: 1" = 10'

NO.	DATE	DESCRIPTION
1	11/21/2024	REVISED PER SJRWMD & CITY OF MOUNT DORA COMMENTS

REVISION BLOCK

SANTOS MEDINA, III, P.E.
STATE OF FLORIDA
PROFESSIONAL ENGINEER
LICENSE NO. 74339
11/21/2024
NOT VALID WITHOUT THE SIGNATURE AND ORIGINAL RAISED SEAL OF A FLORIDA LICENSED ENGINEER
NOT VALID WITHOUT THE SIGNATURE AND ORIGINAL RAISED SEAL

DESIGNED BY:	DRAWN BY:	CHECKED BY:
SM	DH	SM

SLOAN Engineering Group
150 SOUTH WOODLAWN AVENUE, BARTOW, FL 33830
PHONE: (863) 800-3046 - FAX: (863) 800-1159
FLORIDA CERTIFICATE OF AUTHORIZATION (FLCA) #26247

CLIENT: EUDORA ROAD, LLC

PROJECT: FREDDY'S FROZEN CUSTARD - MOUNT DORA

CROSS SECTIONS

2495 EUDORA RD, MT DORA, FLORIDA 32757

PROJECT NO.	SHEET
2575	C600

X:\Engineering\2575-FFC of Central Florida-Freddy's Frozen Custard-Mt Dora\cad\2575 Base.dwg, C600-Cross Sections, 11/21/2024 8:52:39 AM, dharper, 1:1

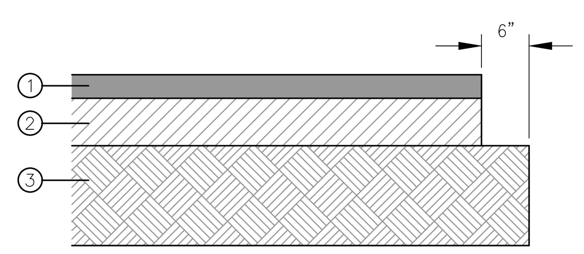

1. 2.0" TYPE "SP-9.5" ASPHALTIC CONCRETE; TRAFFIC LEVEL B OR HIGHER; LAYER THICKNESS 1.0" TO 1.5"; RAP WILL BE APPROVED BY THE EOR IN COMPLIANCE WITH FDOT SPECIFICATIONS, SECTION 334; BINDER COURSE TO BE APPLIED PER FDOT SPECIFICATION, SECTION 334-2.
2. 8" LIMEROCK (MIN LBR 100); COMPACTED 98% AASHTO T180 METHOD "D"; ALTERNATIVE: 8" CRUSHED CONCRETE; COMPACTED 98% AASHTO T180 METHOD "D"
3. 12" TYPE "B" STABILIZATION PER FDOT SPECIFICATION 160; LBR 40 (MINIMUM); COMPACTED TO 98% AASHTO T180. NOTE, IF EXISTING MATERIAL IS ANTICIPATED TO MEET THE REQUIREMENTS ABOVE THEN TESTING SHALL BE SUBMITTED TO THE EOR FOR VERIFICATION.

2.0" x 0.44 = 0.88
8.0" x 0.18 = 1.44
12.0" x 0.08 = 0.96
3.28

Typical Heavy Duty Asphalt Pavement Detail
N.T.S.

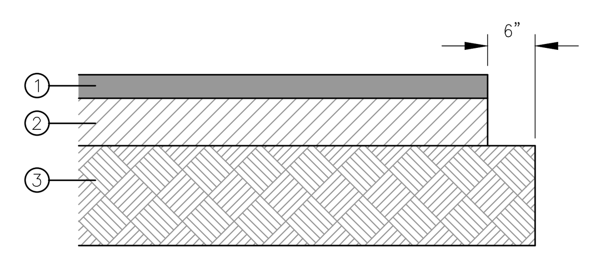

1. 1.5" TYPE "SP-9.5" ASPHALTIC CONCRETE; TRAFFIC LEVEL B OR HIGHER; LAYER THICKNESS 1.0" TO 1.5"; RAP WILL BE APPROVED BY THE EOR IN COMPLIANCE WITH FDOT SPECIFICATIONS, SECTION 334; BINDER COURSE TO BE APPLIED PER FDOT SPECIFICATION, SECTION 334-2.
2. 6" LIMEROCK (MIN LBR 100); COMPACTED 98% AASHTO T180 METHOD "D"; ALTERNATIVE: 8" CRUSHED CONCRETE; COMPACTED 98% AASHTO T180 METHOD "D"
3. 12" TYPE "B" STABILIZATION PER FDOT SPECIFICATION 160; LBR 40 (MINIMUM); COMPACTED TO 98% AASHTO T180. NOTE, IF EXISTING MATERIAL IS ANTICIPATED TO MEET THE REQUIREMENTS ABOVE THEN TESTING SHALL BE SUBMITTED TO THE EOR FOR VERIFICATION.

1.5" x 0.44 = 0.66
6.0" x 0.18 = 1.08
12.0" x 0.08 = 0.96
2.70

Typical Standard Duty Asphalt Pavement Detail
N.T.S.

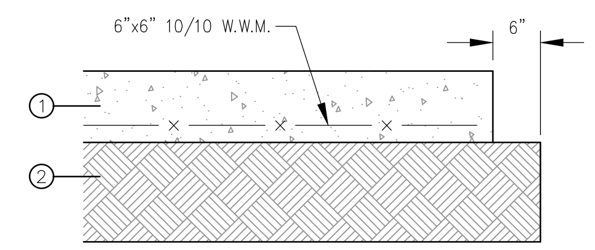

1. 7" 4,000 PSI CONCRETE
2. 24" EXISTING SANDS OR CLEAN FINE SAND FILL (SP); LBR 40 (MINIMUM); COMPACTED TO 98% AASHTO T180 METHOD D.

CONCRETE PAVEMENT SECTIONS SHOULD INCLUDE ADEQUATE SAWCUTS, EXPANSION JOINTS, AND REINFORCEMENT IN ACCORDANCE WITH PORTLAND CEMENT ASSOCIATION (PCA) DESIGN GUIDELINES FOR RIGID PAVEMENTS. SAWCUT PATTERNS SHOULD GENERALLY BE SQUARE OR RECTANGULAR BUT NEARLY SQUARE, AND EXTEND TO A DEPTH EQUAL TO A QUARTER OF THE SLAB THICKNESS.

Typical Heavy Duty Concrete Pavement Detail
N.T.S.

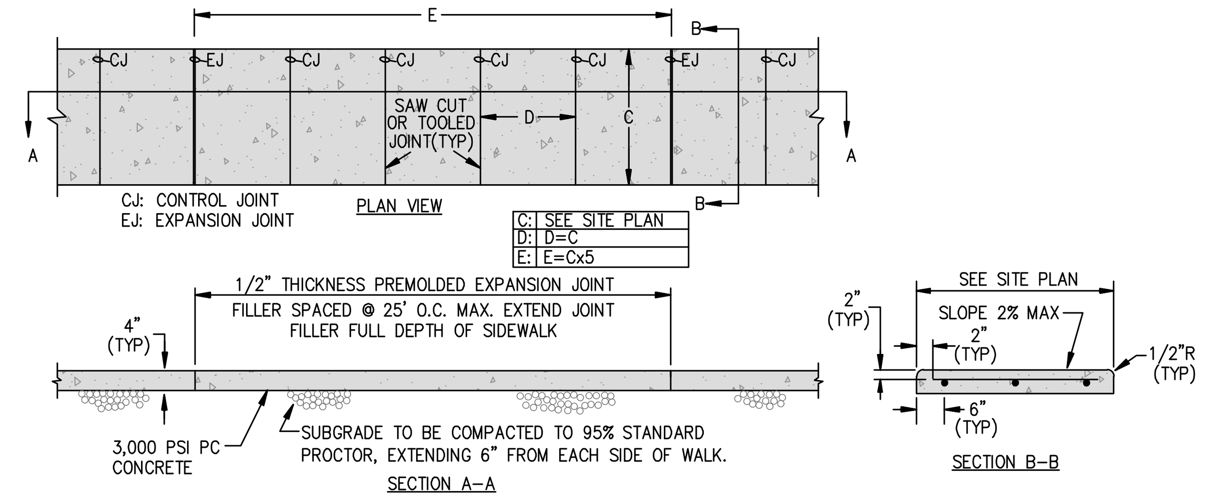

NOTES:
1. REQUIRED REINFORCEMENT WILL BE No. 3 BARS, 24" O.C. EACH WAY MAX. SPACING, OR 6x6 – W1.4xW1.4 WWF
2. INSTALL 1/2" EXPANSION JOINT MATERIAL AT AREAS WERE PROPOSED SIDEWALK ABUTS EXISTING SIDEWALK, CURBS, AND/OR STRUCTURE. JOINT MATERIAL. TO MEET ASTM D994 OR D1751.
3. CONTROL JOINTS TO BE 1/4 THE DEPTH OF THE CONCRETE.
4. EXPANSION JOINTS TO EXTEND THE FULL WIDTH OF THE SIDEWALK.

Typical Sidewalk Detail
N.T.S.

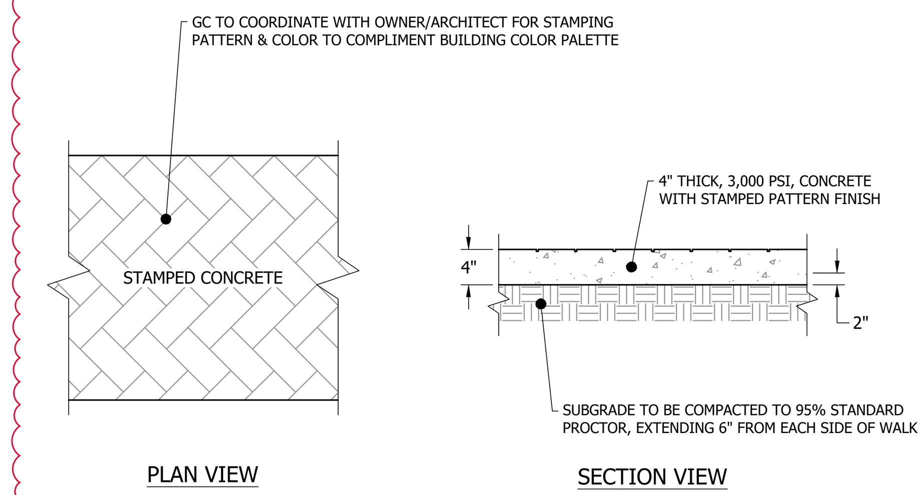

NOTES:
1. PROVIDE CONTROL JOINTS SPACED EVERY 10 FEET ON CENTER.
2. PROVIDE EXPANSION JOINTS AT ALL RIGID OBJECTS.

Standard Stamped Colored Concrete Detail
N.T.S.

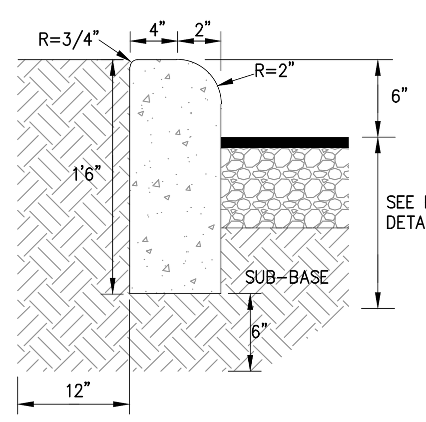

Standard Trench Curb Detail
N.T.S.

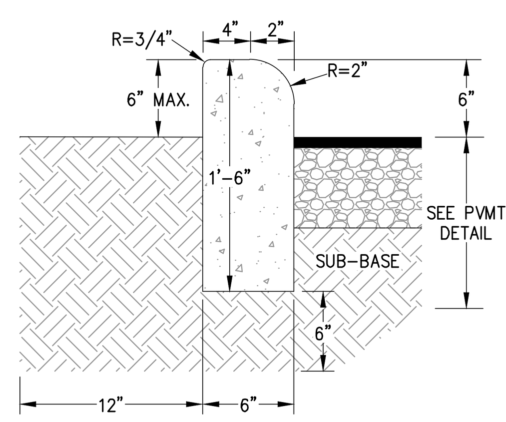

Exposed Trench Curb Detail
N.T.S.

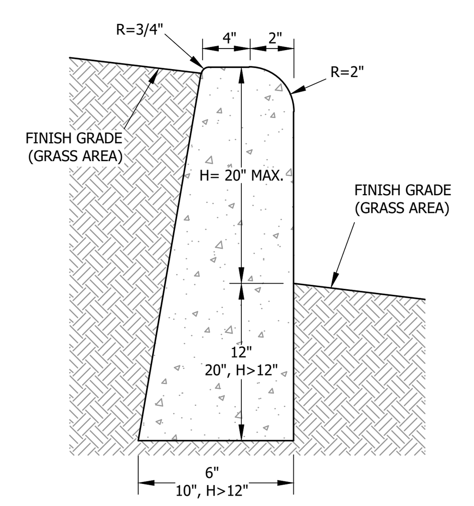

Retaining Curb Detail (Grass Area)
N.T.S.

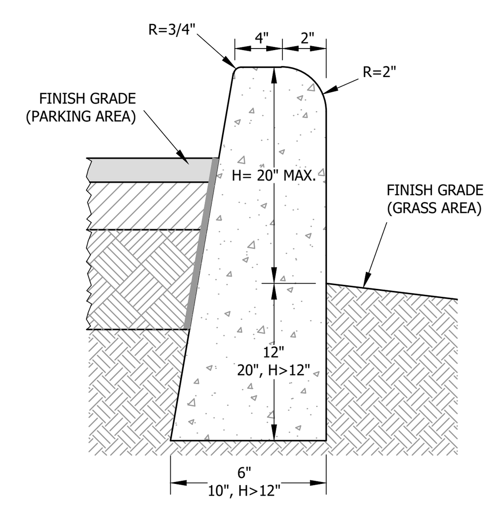

Retaining Curb Detail (Paved Area)
N.T.S.

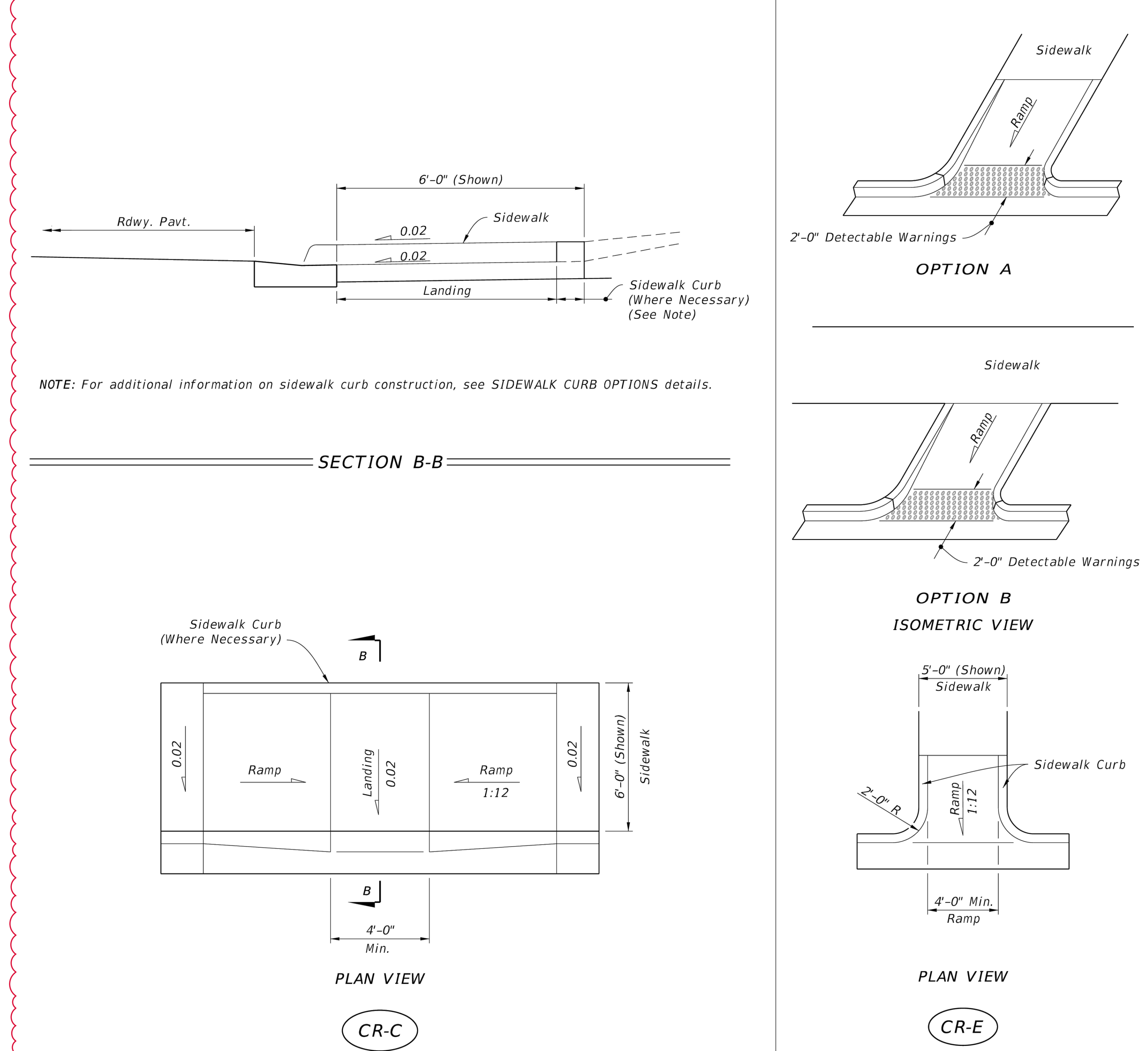

Sidewalk Curb Ramp Details
N.T.S.

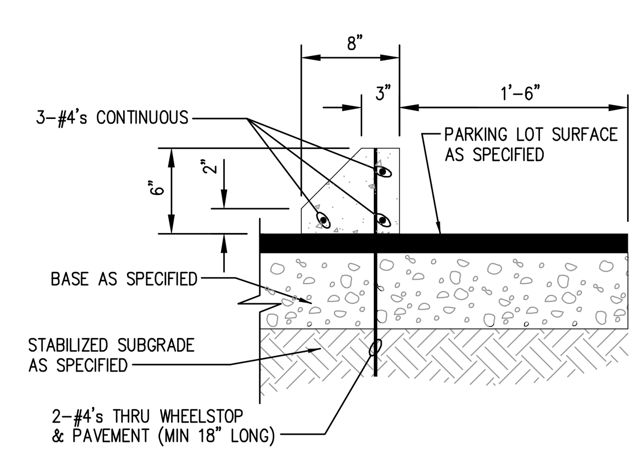

Concrete Wheelstop Detail
N.T.S.

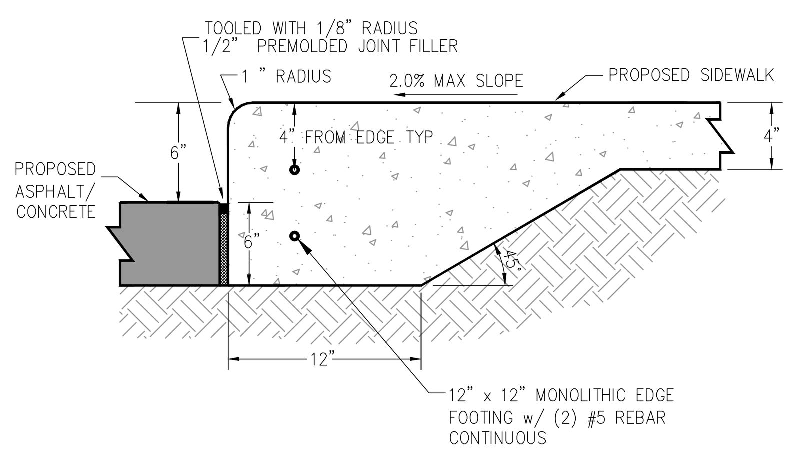

Raised Sidewalk Detail
N.T.S.

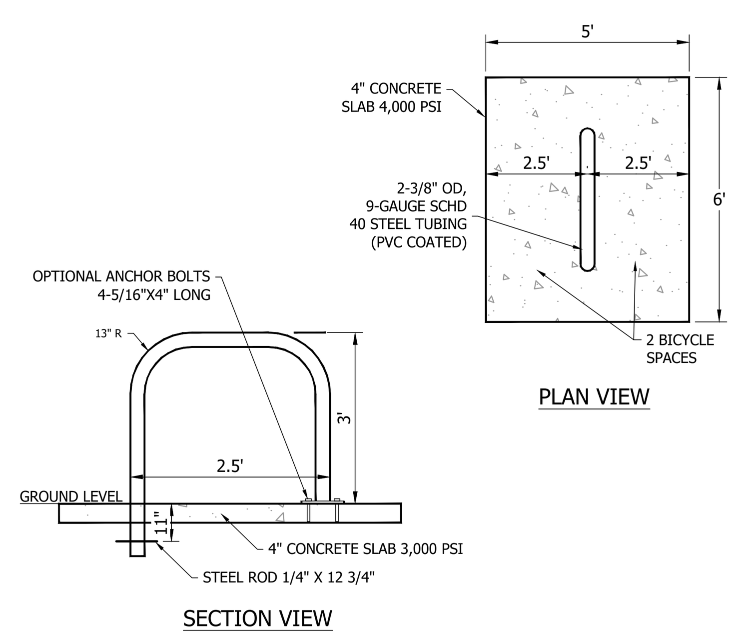

Bike Rack Detail
N.T.S.

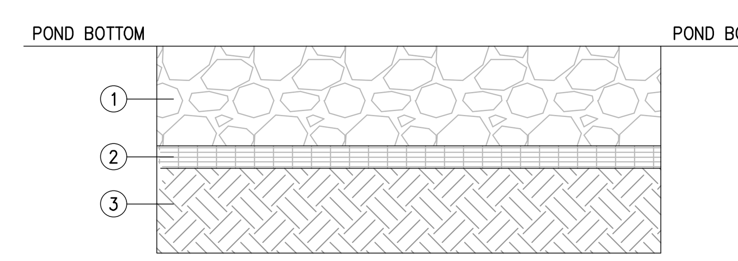

1. 6"-9" LAYER OF RIP RAP RUBBLE (FDOT DESIGN STANDARD FOR ROAD AND BRIDGE CONSTRUCTION SECTION 530)
2. GEOTEXTILE FILTER FABRIC (FDOT DESIGN STANDARD FOR ROAD AND BRIDGE CONSTRUCTION SECTION 514 AND STANDARD INDEX 199)
3. 6" COMPACTED SUBGRADE

Rip-Rap Detail
N.T.S.

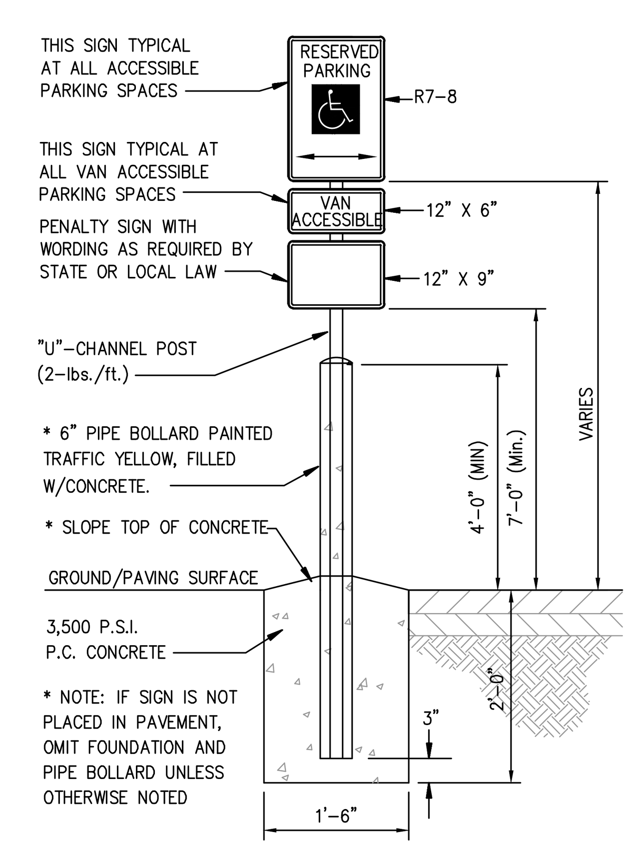

Accessible Parking Sign Detail
N.T.S.

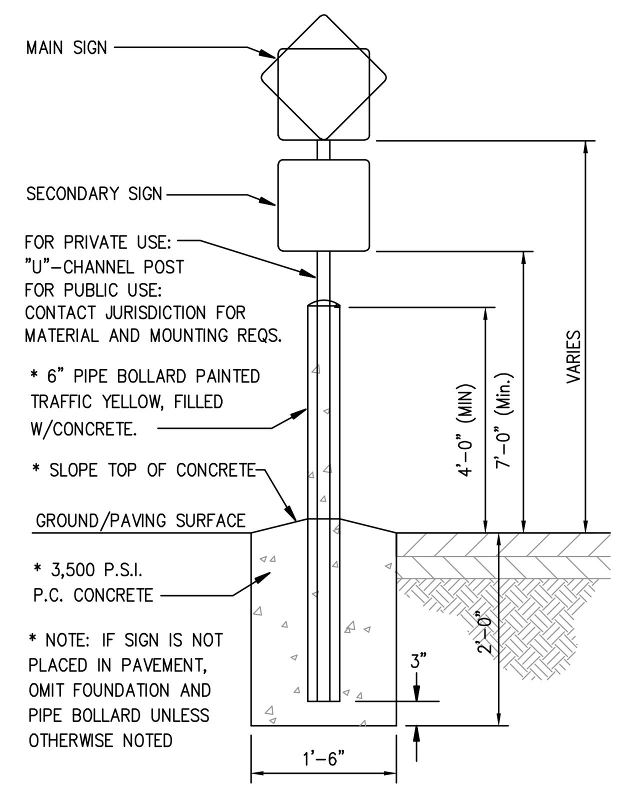

Typical Sign Detail
N.T.S.

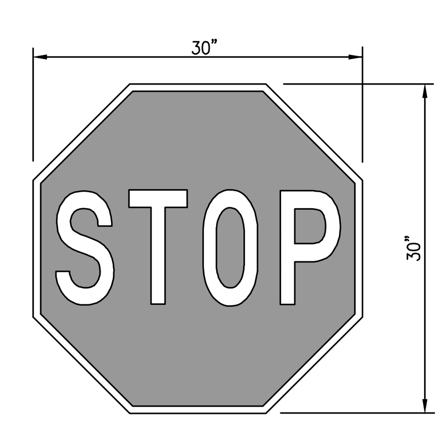

Typical Stop Sign Detail
N.T.S.

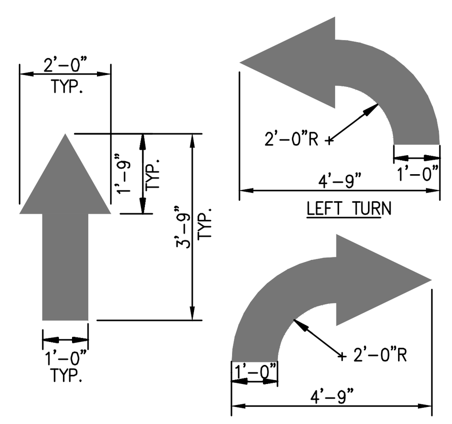

NOTE:
ALL TRAFFIC FLOW ARROWS TO BE SOLID WHITE REFLECTIVE TRAFFIC PAINT PER DIMENSIONS ABOVE. SEE FDOT STANDARD PLANS FOR STRIPING ON STATE HIGHWAYS.

Typical Arrow Detail
N.T.S.

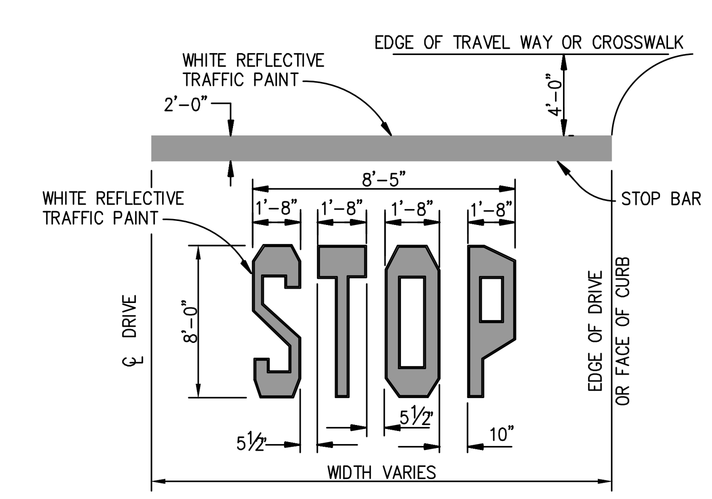

Typical Stop Bar Accent Detail
N.T.S.

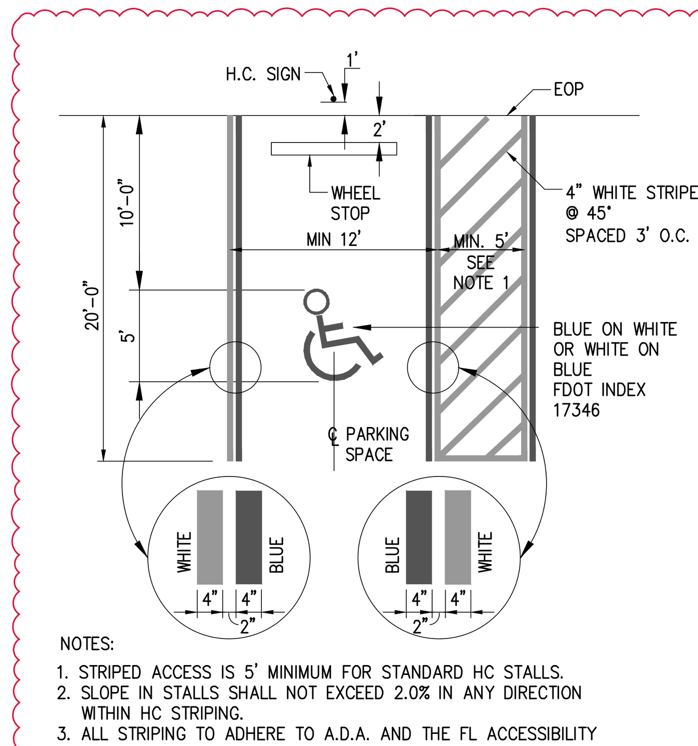

NOTES:
1. STRIPED ACCESS IS 5' MINIMUM FOR STANDARD HC STALLS.
2. SLOPE IN STALLS SHALL NOT EXCEED 2.0% IN ANY DIRECTION WITHIN HC STRIPING.
3. ALL STRIPING TO ADHERE TO A.D.A. AND THE FL ACCESSIBILITY CODE FOR BUILDING CONSTRUCTION.

ADA Parking Detail
N.T.S.

X:\Engineering\2575-FFC of Central Florida-Freddy's Frozen Custard-Mt Dora\cad\2575 Base.dwg, C700-Site Details, 11/21/2024 8:52:51 AM, dharper, 1:1

NO.	DATE	DESCRIPTION
1	11/21/2024	REVISED PER SJRWMD & CITY OF MOUNT DORA COMMENTS

REVISION BLOCK

SANTOS MEDINA, III, P.E.
STATE OF FLORIDA
PROFESSIONAL ENGINEER
LICENSE NO. 74539

This item has been digitally signed and sealed by the engineer on the date indicated hereon. Printed copies of this document are not considered signed and sealed. Signature must be verified on any electronic copies.
11/21/2024

NOT VALID UNLESS PHYSICALLY, DIGITALLY, OR ELECTRONICALLY SIGNED AND SEALED

DESIGNED BY: SM
DRAWN BY: DH
CHECKED BY: SM

SLOAN Engineering Group
150 SOUTH WOODLAWN AVENUE, BARTOW, FL 33830
PHONE: (863) 800-3046 - FAX: (863) 800-1159
FLORIDA CERTIFICATE OF AUTHORIZATION (FLCA) #26247

CLIENT: EUDORA ROAD, LLC
PROJECT: FREDDY'S FROZEN CUSTARD - MOUNT DORA

SITE DETAILS

2495 EUDORA RD, MT DORA, FLORIDA 32757

PROJECT NO. 2575
SHEET C700

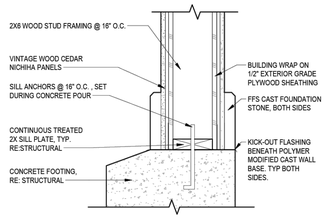

20 FLASHING DETAIL
1 1/2" = 1'-0"

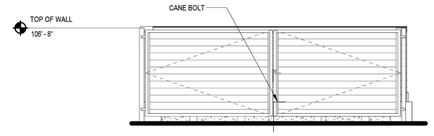

PANEL MATERIAL: COMPOSITE TIMBER GRAY WITH PATENT PENDING REDUCED FASTENER SYSTEM.

100% MAINTENANCE FREE, NO LUBRICATION REQUIRED. NO GUIDE WHEEL REQUIRED.

ALUMINUM WELDED TUBE FRAME WITH PATENT PENDING ALUMINUM BRACKETS WITH PLANE COMPOSITE BEARINGS TO FIT A 6-5/8" OD SCHEDULE 40 GALVANIZED PIPE. TOP BRACKET CLOSED END.

APPROXIMATELY 50% LIGHTER THAN TRADITIONAL COMPOSITE GATE DESIGN.

INSIDER TO INSIDER BOLLARDS
POST HEIGHT
FINISHED GATE HEIGHT
6" CLEARANCE BETWEEN GRADE & BOTTOM OF GATE

10 MUELLER DOOR COMPANY COMPOSITE PANEL
1/4" = 1'-0"

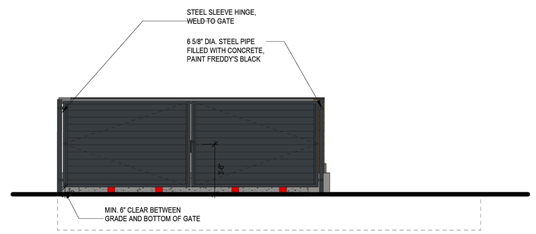

9 TRASH ENCLOSURE FRONT ELEVATION
1/4" = 1'-0"

NOTE:
STEEL POST HAS BEEN SET IN CURED CONCRETE - SECURE GATE & LIFT OVER STEEL POST - SLOWLY LOWER GATE TUBE OVER 6" POST - GATE IS SET WHEN DISTANCE BETWEEN GRADE AND GATE BOTTOM IS 4"

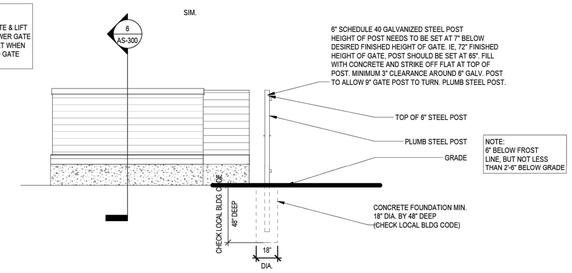

4 TRASH ENCLOSURE POST POSITION DETAIL & INSTALLATION
1/4" = 1'-0"

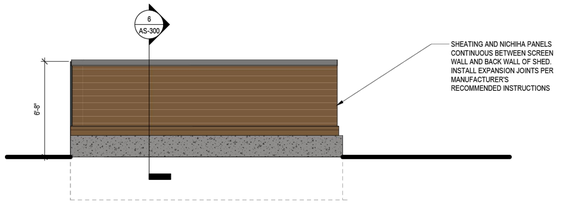

13 TRASH ENCLOSURE REAR ELEVATION
1/4" = 1'-0"

VINTAGEWOOD
1818
NICHIHA
WOODGRAIN

DUMPSTER MATERIAL LEGEND

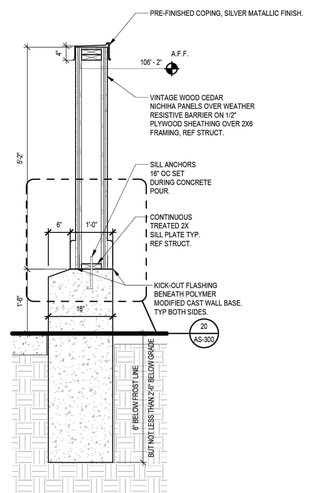

6 TRASH ENCLOSURE WALL SECTION
3/4" = 1'-0"

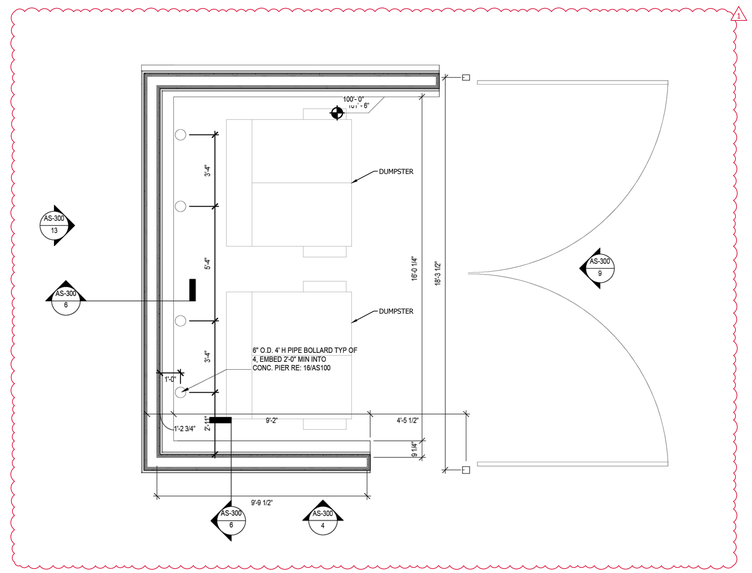

1 ENLARGED TRASH ENCLOSURE PLAN

NO.	DATE	DESCRIPTION
1	11/21/2024	REVISED PER SJRWMD & CITY OF MOUNT DORA COMMENTS

REVISION BLOCK

SANTOS MEDINA, III, P.E.
STATE OF FLORIDA
PROFESSIONAL ENGINEER
LICENSE NO. 74339
11/21/2024
NOT VALID WITHOUT THE ORIGINAL SIGNATURE AND SEALED

DESIGNED BY:	DRAWN BY:	CHECKED BY:
SM	DH	SM

SLOAN Engineering Group
150 SOUTH WOODLAWN AVENUE, BARTOW, FL 33830
PHONE: (863) 800-3046 - FAX: (863) 800-1159
FLORIDA CERTIFICATE OF AUTHORIZATION (FLCA) # 26247

CLIENT: EUDORA ROAD, LLC
PROJECT: FREDDY'S FROZEN CUSTARD - MOUNT DORA

TRASH ENCLOSURE DETAILS

2495 EUDORA RD, MT DORA, FLORIDA 32757

PROJECT NO.	SHEET
2575	C701

X:\Engineering\2575-PFC of Central Florida-Freddy's Frozen Custard-Mt Dora\cad\2575 Base.dwg, C701-Trash Enclosure Details, 11/21/2024 8:52:59 AM, dharper, 1:1

X:\Engineering\2575-FFC of Central Florida-Freddy's Frozen Custard-Mt Dora\cad\2575 Base.dwg, C702-Drainage Details, 11/21/2024 8:53:23 AM, dharper, 1:1

PROJECT SUMMARY

CALCULATION DETAILS
- LOADING = HS20/HS25
- APPROX. LINEAR FOOTAGE = 742 LF

STORAGE SUMMARY
- STORAGE VOLUME REQUIRED = 10,000 CF
- PIPE STORAGE VOLUME = 7,139 CF
- BACKFILL STORAGE VOLUME = 2,875 CF
- TOTAL STORAGE PROVIDED = 10,014 CF
- STONE VOID = 40%

PIPE DETAILS
- DIAMETER = 42"
- CORRUGATION = 2 2/3x1/2
- GAGE = 98.00'
- COATING = ALT2
- WALL TYPE = XFILTRATION
- BARREL SPACING = 15"

BACKFILL DETAILS
- WIDTH AT ENDS = 15"
- ABOVE PIPE = 3"
- WIDTH AT SIDES = 15"
- BELOW PIPE = 0"

KEY

SOLID

CONTAINMENT BASIN PRETREATMENT

NOTES
- ALL RISER AND STUB DIMENSIONS ARE TO CENTERLINE. ALL ELEVATIONS, DIMENSIONS, AND LOCATIONS OF RISERS AND INLETS, SHALL BE VERIFIED BY THE ENGINEER OF RECORD PRIOR TO RELEASING FOR FABRICATION.
- ALL FITTINGS AND REINFORCEMENT COMPLY WITH ASTM A998.
- ALL RISERS AND STUBS ARE 2⅔" x ½" CORRUGATION AND 16 GAGE UNLESS OTHERWISE NOTED.
- RISERS TO BE FIELD TRIMMED TO GRADE.
- QUANTITY OF PIPE SHOWN DOES NOT PROVIDE EXTRA PIPE FOR CONNECTING THE SYSTEM TO EXISTING PIPE OR DRAINAGE STRUCTURES. OUR SYSTEM AS DETAILED PROVIDES NOMINAL INLET AND/OR OUTLET PIPE STUB FOR CONNECTION TO EXISTING DRAINAGE FACILITIES. IF ADDITIONAL PIPE IS NEEDED IT IS THE RESPONSIBILITY OF THE CONTRACTOR.
- BAND TYPE TO BE DETERMINED UPON FINAL DESIGN.
- THE PROJECT SUMMARY IS REFLECTIVE OF THE DYODS DESIGN, QUANTITIES ARE APPROX. AND SHOULD BE VERIFIED UPON FINAL DESIGN AND APPROVAL. FOR EXAMPLE, TOTAL EXCAVATION DOES NOT CONSIDER ALL VARIABLES SUCH AS SHORING AND ONLY ACCOUNTS FOR MATERIAL WITHIN THE ESTIMATED EXCAVATION FOOTPRINT.
- THESE DRAWINGS ARE FOR CONCEPTUAL PURPOSES AND DO NOT REFLECT ANY LOCAL PREFERENCES OR REGULATIONS. PLEASE CONTACT YOUR LOCAL CONTECH REP FOR MODIFICATIONS.

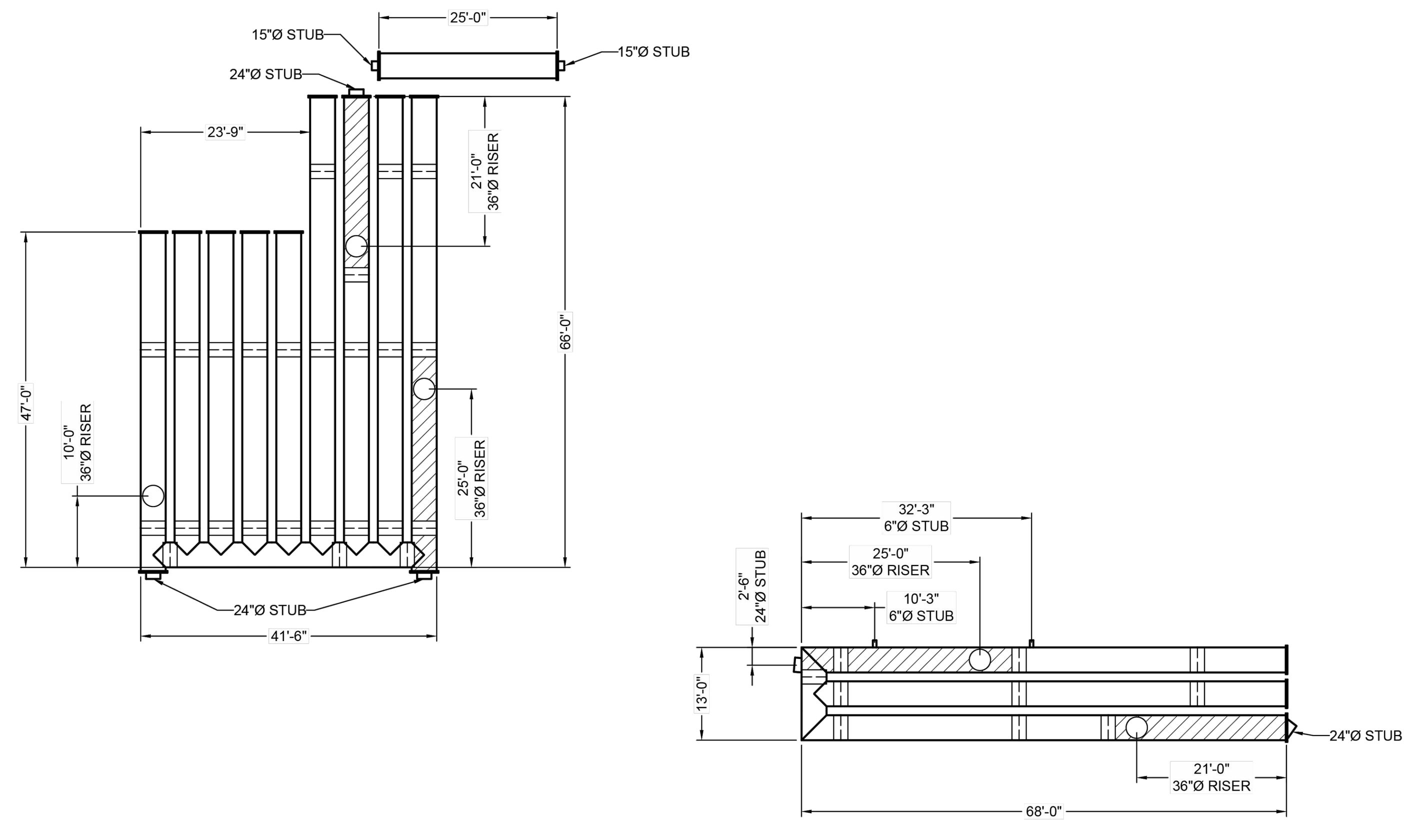

ASSEMBLY
SCALE: 1" = 20'

The design and information shown on this drawing is provided as a service to the project owner, engineer and contractor by Contech Engineered Solutions LLC ("Contech"). Neither this drawing, nor any part thereof, may be used, reproduced or modified in any manner without the prior written consent of Contech. Failure to comply is done at the user's own risk and Contech expressly disclaims any liability or responsibility for such use.

If discrepancies between the supplied information upon which the drawing is based and actual field conditions are encountered as site work progresses, these discrepancies must be reported to Contech immediately for re-evaluation of the design. Contech accepts no liability for designs based on missing, incomplete or inaccurate information supplied by others.

DATE	REVISION DESCRIPTION	BY

CONTECH ENGINEERED SOLUTIONS LLC
www.ContechES.com
9025 Centre Pointe Dr., Suite 400, West Chester, OH 45069
800-338-1122 513-645-7000 513-645-7993 FAX

CONTECH CMP DETENTION SYSTEMS
CONTECH DYODS DRAWING

#810,522 Freddy's Steakburgers
Oviedo, FL
42" RETENTION SYSTEM

PROJECT No.: 38319	SEQ. No.: 55108	DATE: 7/12/2024
DESIGNED: DYO	DRAWN: DYO	
CHECKED: DYO	APPROVED: DYO	
SHEET NO.: 1		

I:\MERLIN\PROJECT\ACTIVE\810500\810522\810522-10-CMP DETENTION - XFILTRATION\DYODS\FREDDY'S STEAKBURGERS - CONTECH DYO - 2024-07-12.DWG 7/12/2024 3:45 PM

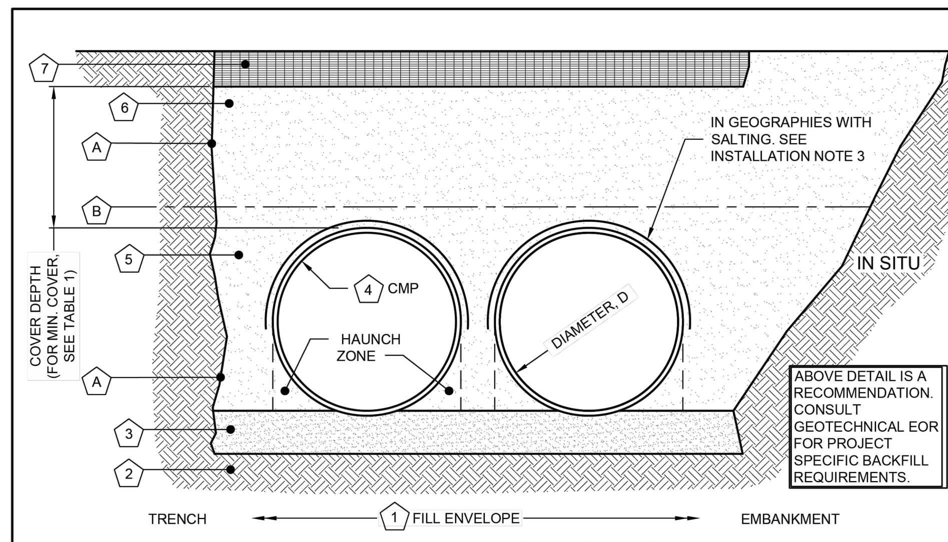

MINIMUM WIDTH DEPENDS ON SITE CONDITIONS AND ENGINEERING JUDGEMENT

TABLE 1:

DIAMETER, D	MIN. COVER	CORR. PROFILE
6"-10"	12"	1 1/2" x 1/4"
12"-48"	12"	2 2/3" x 1/2"
>48"-96"	12"	3" x 1", 5" x 1"
>96"	D/8	3" x 1", 5" x 1"

- STRUCTURAL BACKFILL MUST EXTEND TO LIMITS OF THE TABLE
- TOTAL HEIGHT OF COMPACTED COVER FOR CONVENTIONAL HIGHWAY LOADS IS MEASURED FROM TOP OF PIPE TO BOTTOM OF FLEXIBLE PAVEMENT OR TOP OF RIGID PAVEMENT.

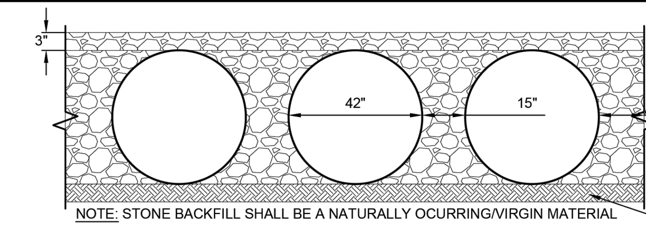

NOTE: STONE BACKFILL SHALL BE A NATURALLY OCURRING/VIRGIN MATERIAL

TYPICAL SECTION VIEW
SCALE: N.T.S.

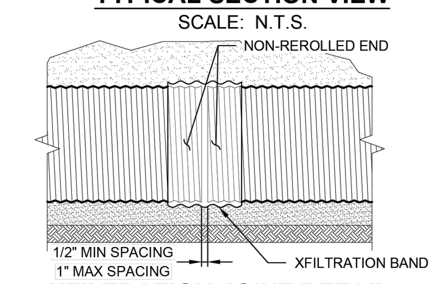

XFILTRATION JOINT DETAIL
NOT TO SCALE

TABLE 2:

XFILTRATION™ JOINT STANDARD BACKFILL SPECIFICATIONS

	MATERIAL LOCATION	MATERIAL SPECIFICATION	DESCRIPTION	
1	FILL ENVELOPE WIDTH	PER ENGINEER OF RECORD	MINIMUM TRENCH WIDTH MUST ALLOW ROOM FOR PROPER COMPACTION OF HAUNCH MATERIALS UNDER THE PIPE. THE SUGGESTED MINIMUM TRENCH WIDTH, OR EOR RECOMMENDATION: PIPE ≤ 12": D + 16" PIPE > 12": 1.5D + 12"	MINIMUM EMBANKMENT WIDTH (IN FEET) FOR INITIAL FILL ENVELOPE: PIPE < 24": 3.0D PIPE 24" - 144": D + 4'0" PIPE > 144": D + 10'0"
2	FOUNDATION	**AASHTO 26.5.2** - PER ENGINEER OF RECORD	PRIOR TO PLACING THE BEDDING, THE FOUNDATION MUST BE CONSTRUCTED TO A UNIFORM AND STABLE GRADE. IN THE EVENT THAT UNSUITABLE FOUNDATION MATERIALS ARE ENCOUNTERED DURING EXCAVATION, THEY SHALL BE REMOVED AND FOUNDATION BROUGHT BACK TO GRADE WITH A FILL MATERIAL APPROVED BY THE ENGINEER OF RECORD.	
3	BEDDING	**AASHTO M 43: 3, 357, 4, 467, 5, 56, 57**	ENGINEER OF RECORD TO DETERMINE IF BEDDING IS REQUIRED. PIPE MAY BE PLACED ON THE TRENCH BOTTOM OF A RELATIVELY LOOSE, NATIVE SUITABLE WELL GRADED GRANULAR MATERIAL THAT IS ROUGHLY SHAPED TO FIT THE BOTTOM OF THE PIPE, 2" MIN DEPTH. THE BEDDING MATERIAL MAY BE SUITABLE OPEN GRADED GRANULAR BEDDING CONFORMING TO AASHTO SOIL CLASSIFICATIONS A1, A2, OR A3 WITH MAXIMUM PARTICLE SIZE OF 3" PER AASHTO 26.3.8.1	
4	CORRUGATED METAL PIPE			
5	BACKFILL	FREE-DRAINING, ANGULAR, WASHED-STONE PER **AASHTO M 43: 3, 357, 4, 467, 5, 56, 57** OR APPROVED EQUAL *	HAUNCH ZONE MATERIAL SHALL BE HAND SHOVELED OR SHOVEL SLICED INTO PLACE TO ALLOW FOR PROPER COMPACTION WITHOUT SOFT SPOTS. BACKFILL SHALL BE PLACED IN 8" +/- LOOSE LIFTS AND COMPACTED TO 90% STANDARD PROCTOR PER AASHTO T 99. BACKFILL SHALL BE PLACED SUCH THAT THERE IS NO MORE THAN A TWO LIFT (16") DIFFERENTIAL BETWEEN ANY OF THE PIPES AT ANY TIME DURING THE BACKFILL PROCESS. THE BACKFILL SHOULD BE ADVANCED ALONG THE LENGTH OF THE SYSTEM TO AVOID DIFFERENTIAL LOADING. WHERE CONVENTIONAL COMPACTION TESTING IS NOT PRACTICAL, THE MATERIAL SHALL BE MECHANICALLY COMPACTED UNTIL NO FURTHER YIELDING OF MATERIAL IS OBSERVED UNDER THE COMPACTOR. **IN AREAS WITH HIGH WATER TABLE FLUCTUATIONS THAT INTERACT WITH THE PIPE ZONE, CONSIDER INSTALLING A GEOTEXTILE SEPARATION LAYER TO PREVENT SOIL MIGRATION.	
6	COVER MATERIAL	UP TO MIN. COVER - **AASHTO M 145: A-1, A-2, A-3** ABOVE MIN. COVER - PER ENGINEER OF RECORD	COVER MATERIAL MAY INCLUDE NON-BITUMINOUS, GRANULAR ROADBASE MATERIAL WITHIN MIN COVER LIMITS	
7	RIGID OR FLEXIBLE PAVEMENT (IF APPLICABLE)	PER ENGINEER OF RECORD	FLEXIBLE PAVEMENT SHOULD NOT BE COUNTED AS PART OF THE FILL HEIGHT OVER THE CMP. FINAL BACKFILL MATERIAL SELECTION AND COMPACTION REQUIREMENTS SHALL FOLLOW THE PROJECT PLANS AND SPECIFICATIONS PER THE ENGINEER OF RECORD.	
A	SIDE GEOTEXTILE	C-40NW (revision 1)	GEOTEXTILE LAYER IS RECOMMENDED ON SIDES OF EXCAVATION TO PREVENT SOIL MIGRATION WHEN STONE BEDDING IS USED. IF NO STONE BEDDING IS USED, THEN SIDE GEOTEXTILE IS REQUIRED.	
B	GEOTEXTILE BETWEEN LAYERS	C-40NW	IF SOIL TYPES DIFFER AT ANY POINT ABOVE PIPE INVERT, A GEOTEXTILE LAYER IS RECOMMENDED TO BE PLACED BETWEEN THE LAYERS TO PREVENT SOIL MIGRATION.	

NOTES:
- FOR MULTIPLE BARREL INSTALLATIONS, THE RECOMMENDED STANDARD SPACING BETWEEN PARALLEL PIPE RUNS SHALL BE THE PIPE DIAMETER /2 BUT NO LESS THAN 12" FOR DIAMETERS <72". FOR 72" AND LARGER DIAMETERS, THE MINIMUM SPACING IS 36". CONTACT YOUR CONTECH REPRESENTATIVE FOR NONSTANDARD SPACING.

* APPROVED REGIONAL EQUIVALENTS FOR SECTION 5 INCLUDE MIDOT 6AA, 6A, OR 5G, PROVIDED THEY MEET THE PARTICLE SIZES INDICATED.

MANUFACTURER RECOMMENDED BACKFILL
NOT TO SCALE

INSTALLATION NOTES
1. WHEN PLACING THE FIRST LIFTS OF BACKFILL IT IS IMPORTANT TO MAKE SURE THAT THE BACKFILL IS PROPERLY COMPACTED UNDER AND AROUND THE PIPE HAUNCHES.
2. OTHER ALTERNATE BACKFILL MATERIAL MAY BE ALLOWED DEPENDING ON SITE SPECIFIC CONDITIONS, AS APPROVED BY SITE ENGINEER.
3. IF SALTING AGENTS FOR SNOW AND ICE REMOVAL ARE USED ON OR NEAR THE PROJECT, A GEOMEMBRANE BARRIER IS RECOMMENDED OVER THE UPPER HALF OF THE PIPE. THE GEOMEMBRANE LINER IS INTENDED TO HELP PROTECT THE SYSTEM FROM THE POTENTIAL ADVERSE EFFECTS THAT MAY RESULT FROM A CHANGE IN THE SURROUNDING ENVIRONMENT OVER A PERIOD OF TIME. PLEASE REFER TO THE CORRUGATED METAL PIPE DETENTION DESIGN GUIDE FOR ADDITIONAL INFORMATION.

The design and information shown on this drawing is provided as a service to the project owner, engineer and contractor by Contech Engineered Solutions LLC ("Contech"). Neither this drawing, nor any part thereof, may be used, reproduced or modified in any manner without the prior written consent of Contech. Failure to comply is done at the user's own risk and Contech expressly disclaims any liability or responsibility for such use.

If discrepancies between the supplied information upon which the drawing is based and actual field conditions are encountered as site work progresses, these discrepancies must be reported to Contech immediately for re-evaluation of the design. Contech accepts no liability for designs based on missing, incomplete or inaccurate information supplied by others.

DATE	REVISION DESCRIPTION	BY

CONTECH ENGINEERED SOLUTIONS LLC
www.ContechES.com
9025 Centre Pointe Dr., Suite 400, West Chester, OH 45069
800-338-1122 513-645-7000 513-645-7993 FAX

CONTECH CMP DETENTION SYSTEMS
CONTECH DYODS DRAWING

#810,522 Freddy's Steakburgers
Oviedo, FL
42" RETENTION SYSTEM

PROJECT No.: 38319	SEQ. No.: 55108	DATE: 7/12/2024
DESIGNED: DYO	DRAWN: DYO	
CHECKED: DYO	APPROVED: DYO	
SHEET NO.: 2		

I:\MERLIN\PROJECT\ACTIVE\810500\810522\810522-10-CMP DETENTION - XFILTRATION\DYODS\FREDDY'S STEAKBURGERS - CONTECH DYO - 2024-07-12.DWG 7/12/2024 3:46 PM

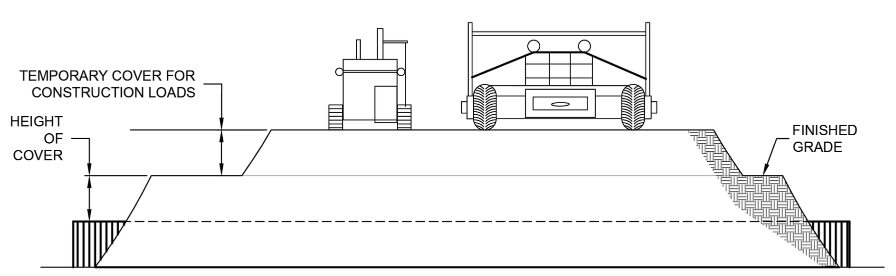

CONSTRUCTION LOADS

FOR TEMPORARY CONSTRUCTION VEHICLE LOADS, AN EXTRA AMOUNT OF COMPACTED COVER MAY BE REQUIRED OVER THE TOP OF THE PIPE. THE HEIGHT-OF-COVER SHALL MEET THE MINIMUM REQUIREMENTS SHOWN IN THE TABLE BELOW. THE USE OF HEAVY CONSTRUCTION EQUIPMENT NECESSITATES GREATER PROTECTION FOR THE PIPE THAN FINISHED GRADE COVER MINIMUMS FOR NORMAL HIGHWAY TRAFFIC.

PIPE SPAN, INCHES	AXLE LOADS (kips)			
	18-50	50-75	75-110	110-150
	MINIMUM COVER (FT)			
12-42	2.0	2.5	3.0	3.0
48-72	3.0	3.0	3.5	4.0
78-120	3.0	3.5	4.0	4.0
126-144	3.5	4.0	4.5	4.5

*MINIMUM COVER MAY VARY, DEPENDING ON LOCAL CONDITIONS. THE CONTRACTOR MUST PROVIDE THE ADDITIONAL COVER REQUIRED TO AVOID DAMAGE TO THE PIPE. MINIMUM COVER IS MEASURED FROM THE TOP OF THE PIPE TO THE TOP OF THE MAINTAINED CONSTRUCTION ROADWAY SURFACE.

CONSTRUCTION LOADING DIAGRAM
SCALE: N.T.S.

SPECIFICATION FOR DESIGNED DETENTION SYSTEM:

SCOPE
THIS SPECIFICATION COVERS THE MANUFACTURE AND INSTALLATION OF THE DESIGNED DETENTION SYSTEM DETAILED IN THE PROJECT PLANS.

MATERIAL
THE MATERIAL SHALL CONFORM TO THE APPLICABLE REQUIREMENTS LISTED BELOW:

ALUMINIZED TYPE 2 STEEL COILS SHALL CONFORM TO THE APPLICABLE REQUIREMENTS OF AASHTO M-274 OR ASTM A-92.

THE GALVANIZED STEEL COILS SHALL CONFORM TO THE APPLICABLE REQUIREMENTS OF AASHTO M-218 OR ASTM A-929.

THE POLYMER COATED STEEL COILS SHALL CONFORM TO THE APPLICABLE REQUIREMENTS OF AASHTO M-246 OR ASTM A-742.

THE ALUMINUM COILS SHALL CONFORM TO THE APPLICABLE REQUIREMENTS OF AASHTO M-197 OR ASTM B-744.

CONSTRUCTION LOADS
CONSTRUCTION LOADS MAY BE HIGHER THAN FINAL LOADS. FOLLOW THE MANUFACTURER'S OR NCSPA GUIDELINES.

PIPE
THE PIPE SHALL BE MANUFACTURED IN ACCORDANCE TO THE APPLICABLE REQUIREMENTS LISTED BELOW:

ALUMINIZED TYPE 2: AASHTO M-36 OR ASTM A-760

GALVANIZED: AASHTO M-36 OR ASTM A-760

POLYMER COATED: AASHTO M-245 OR ASTM A-762

ALUMINUM: AASHTO M-196 OR ASTM B-745

HANDLING AND ASSEMBLY
SHALL BE IN ACCORDANCE WITH NCSP'S (NATIONAL CORRUGATED STEEL PIPE ASSOCIATION) FOR ALUMINIZED TYPE 2, GALVANIZED OR POLYMER COATED STEEL. SHALL BE IN ACCORDANCE WITH THE MANUFACTURER'S RECOMMENDATIONS FOR ALUMINUM PIPE.

INSTALLATION
SHALL BE IN ACCORDANCE WITH AASHTO STANDARD SPECIFICATIONS FOR HIGHWAY BRIDGES, SECTION 26, DIVISION II DIVISION II OR ASTM A-798 (FOR ALUMINIZED TYPE 2, GALVANIZED OR POLYMER COATED STEEL) OR ASTM B-788 (FOR ALUMINUM PIPE) AND IN CONFORMANCE WITH THE PROJECT PLANS AND SPECIFICATIONS. IF THERE ARE ANY INCONSISTENCIES OR CONFLICTS THE CONTRACTOR SHOULD DISCUSS AND RESOLVE WITH THE SITE ENGINEER.

IT IS ALWAYS THE RESPONSIBILITY OF THE CONTRACTOR TO FOLLOW OSHA GUIDELINES FOR SAFE PRACTICES.

NOTE:
THESE DRAWINGS ARE FOR CONCEPTUAL PURPOSES AND DO NOT REFLECT ANY LOCAL PREFERENCES OR REGULATIONS. PLEASE CONTACT YOUR LOCAL CONTECH REP FOR MODIFICATIONS.

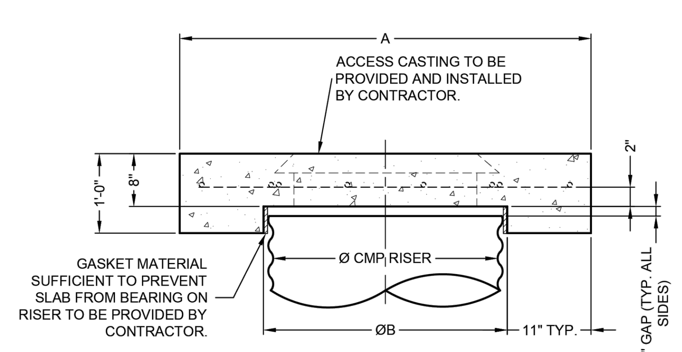

SECTION VIEW

Ø CMP RISER	A	Ø B	REINFORCING	**BEARING PRESSURE (PSF)
24"	Ø 4' 4'X4'	26"	#5 @ 12" OCEW #5 @ 12" OCEW	2,410 1,780
30"	Ø 4'-6" 4'-6" X 4'-6"	32"	#5 @ 12" OCEW #5 @ 12" OCEW	2,120 1,530
36"	Ø 5' 5' X 5'	38"	#5 @ 10" OCEW #5 @ 10" OCEW	1,890 1,350
42"	Ø 5'-6" 5'-6" X 5'-6"	44"	#5 @ 10" OCEW #5 @ 9" OCEW	1,720 1,210
48"	Ø 6' 6' X 6'	50"	#5 @ 9" OCEW #5 @ 8" OCEW	1,600 1,100

REINFORCING TABLE

** ASSUMED SOIL BEARING CAPACITY

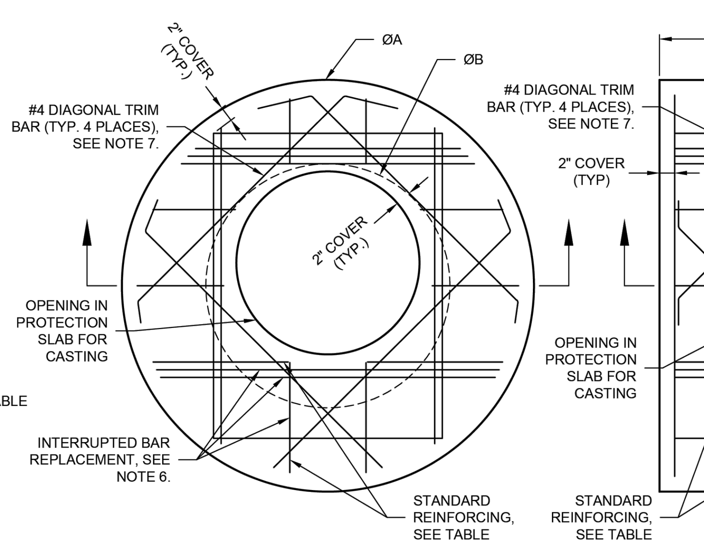

ROUND OPTION PLAN VIEW

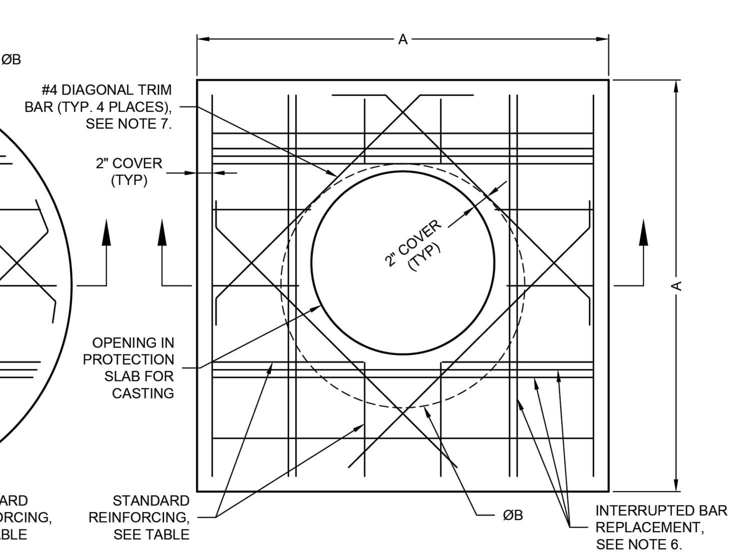

SQUARE OPTION PLAN VIEW

NOTES:
1. DESIGN IN ACCORDANCE WITH AASHTO, 17th EDITION.
2. DESIGN LOAD HS25.
3. EARTH COVER = 1' MAX.
4. CONCRETE STRENGTH = 3,500 psi
5. REINFORCING STEEL = ASTM A615, GRADE 60.
6. PROVIDE ADDITIONAL REINFORCING AROUND OPENINGS EQUAL TO THE BARS INTERRUPTED, HALF EACH SIDE. ADDITIONAL BARS TO BE IN THE SAME PLANE.
7. TRIM OPENING WITH DIAGONAL #4 BARS, EXTEND BARS A MINIMUM OF 12" BEYOND OPENING, BEND BARS AS REQUIRED TO MAINTAIN BAR COVER.
8. PROTECTION SLAB AND ALL MATERIALS TO BE PROVIDED AND INSTALLED BY CONTRACTOR.
9. DETAIL DESIGN BY DELTA ENGINEERING, BINGHAMTON, NY.

MANHOLE CAP DETAIL
SCALE: N.T.S.

The design and information shown on this drawing is provided as a service to the project owner, engineer and contractor by Contech Engineered Solutions LLC ("Contech"). Neither this drawing, nor any part thereof, may be used, reproduced or modified in any manner without the prior written consent of Contech. Failure to comply is done at the user's own risk and Contech expressly disclaims any liability or responsibility for such use.

If discrepancies between the supplied information upon which the drawing is based and actual field conditions are encountered as site work progresses, these discrepancies must be reported to Contech immediately for re-evaluation of the design. Contech accepts no liability for designs based on missing, incomplete or inaccurate information supplied by others.

DATE	REVISION DESCRIPTION	BY

CONTECH ENGINEERED SOLUTIONS LLC
www.ContechES.com
9025 Centre Pointe Dr., Suite 400, West Chester, OH 45069
800-338-1122 513-645-7000 513-645-7993 FAX

CONTECH CMP DETENTION SYSTEMS
CONTECH DYODS DRAWING

#810,522 Freddy's Steakburgers
Oviedo, FL
42" RETENTION SYSTEM

PROJECT No.: 38319	SEQ. No.: 55108	DATE: 7/12/2024
DESIGNED: DYO	DRAWN: DYO	
CHECKED: DYO	APPROVED: DYO	
SHEET NO.: 3		

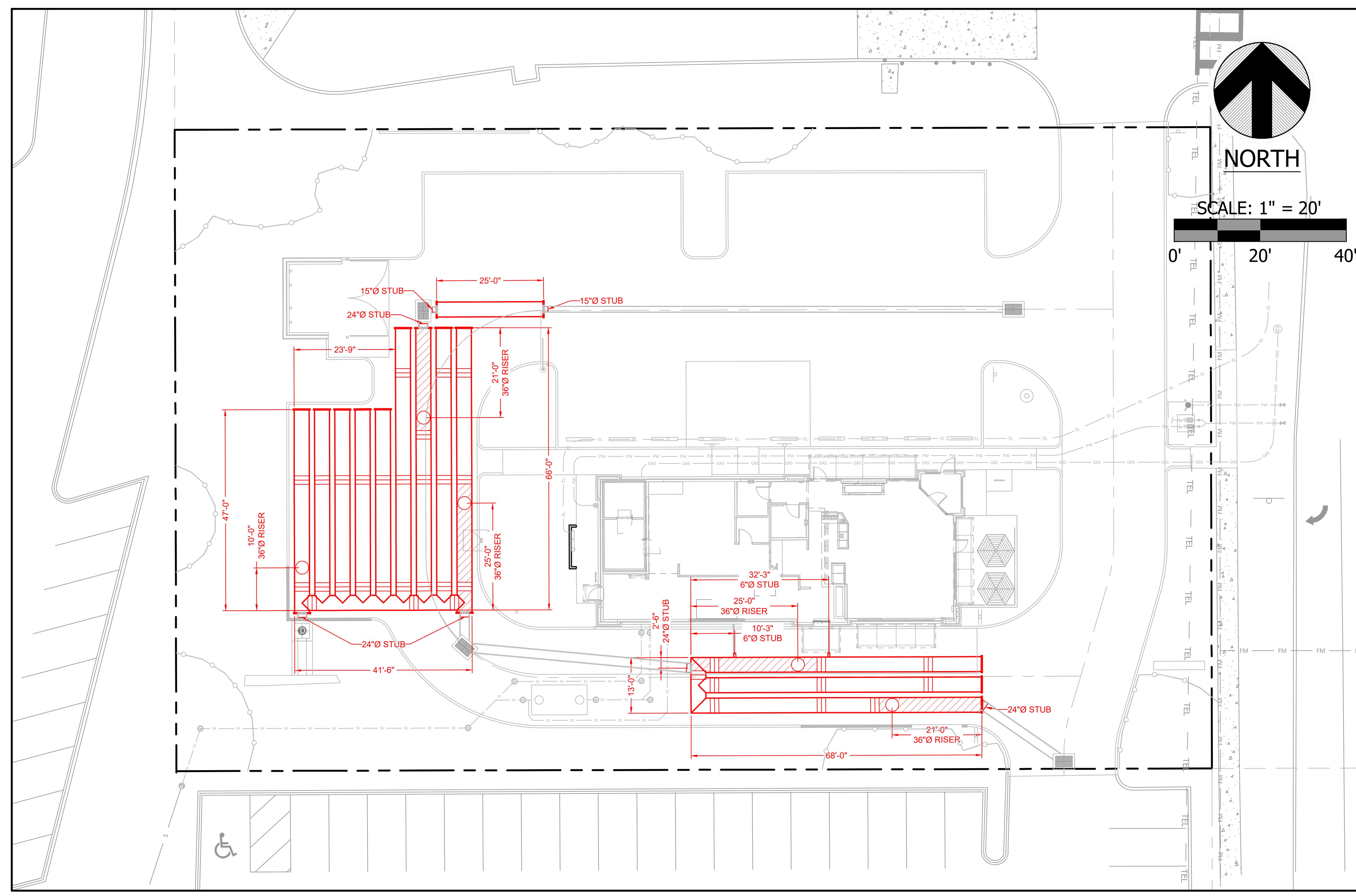

NO.	DATE	DESCRIPTION
1	11/21/2024	REVISED PER SJRWMD & CITY OF MOUNT DORA COMMENTS

REVISION BLOCK

SANTOS MEDINA, III, P.E.
STATE OF FLORIDA
PROFESSIONAL ENGINEER
LICENSE NO. 74539

11/21/2024

This item has been digitally signed and sealed by the engineer on the date indicated herein. Printed copies of this document are not considered signed and sealed. Signature must be verified on any electronic copies.

NOT VALID UNLESS PHYSICALLY, DIGITALLY, OR ELECTRONICALLY SIGNED AND SEALED

DESIGNED BY:	DRAWN BY:	CHECKED BY:
SM	DH	SM

SLOAN Engineering Group
150 SOUTH WOODLAWN AVENUE, BARTOW, FL 33830
PHONE: (863) 800-3046 - FAX: (863) 800-1159
FLORIDA CERTIFICATE OF AUTHORIZATION (FLCA) #26247

CLIENT: EUDORA ROAD, LLC

PROJECT: FREDDY'S FROZEN CUSTARD - MOUNT DORA

CONTECH UNDERGROUND EXFILTRATION DETAILS

2495 EUDORA RD, MT DORA, FLORIDA 32757

PROJECT NO.	SHEET
2575	C702

GENERAL UTILITIES CONSTRUCTION NOTES

1. THE PUBLIC SERVICES DEPARTMENT MUST BE NOTIFIED A MINIMUM OF 48 HOURS PRIOR TO ANY WORK ON EXISTING CITY OF MOUNT DORA UTILITIES. THE CONTRACTOR MUST CONTACT, JOSH KRAMM, UTILITY LINE MANAGER AT HIS OFFICE (352) 735-7151 OR CELL PHONE (352) 516-3691, DISTRIBUTION SUPERVISOR - OFFICE (352) 735-7151 OR CELL PHONE (352) 460-7922, RUSSELL HOPPER, COLLECTION & LIFT STATION SUPERVISOR - OFFICE (352) 735-7151 OR CELL PHONE (352) 973-2032.
2. NO GRADING, CUTTING, OR FILLING SHALL COMMENCE UNTIL SUCH TIME AS APPROPRIATE EROSION AND SEDIMENTATION CONTROL DEVICES HAVE BEEN INSTALLED BETWEEN THE DISTURBED AREA AND WATER BODIES, WATERCOURSES OR WETLANDS.
3. CONSTRUCTION MUST BE PER THE DRC APPROVED SITE PLAN. DEVIATIONS IN ROADWAY, UTILITY OR DRAINAGE CONSTRUCTION WILL REQUIRE WRITTEN APPROVAL OF THE CITY ENGINEER OR THE DIRECTOR OF PUBLIC SERVICES. (NOTE: SIGNIFICANT CHANGES FROM THE DRC APPROVED PLAN MAY REQUIRE THE OWNER/DEVELOPER TO SUBMIT A REVISED SITE PLAN THROUGH THE DRC FOR REVIEW.)
4. CONTRACTOR SHALL PROVIDE AN EMERGENCY CONTACT NUMBER LIST FOR KEY SITE PERSONNEL.
5. ENGINEER OF RECORD REVIEWED SHOP DRAWING SUBMITTALS ARE REQUIRED FOR ALL WATER/ SEWER/ RECLAIMED AND STORMWATER SYSTEMS TO BE DEDICATED TO THE CITY OF MOUNT DORA. TWO SETS ARE REQUIRED FOR REVIEW. ONE SET WILL BE RETURNED TO THE ENGINEER OF RECORD.
6. OFF SITE OR ROADWAY RIGHT OF WAY CONSTRUCTION SHALL BE IN ACCORDANCE WITH ALL CONDITIONS OF THE APPROVED R/W PERMIT(S). A COPY OF THE APPROVED R/W PERMIT MUST BE KEPT ON-SITE AND READILY AVAILABLE DURING ALL CONSTRUCTION ACTIVITIES WITHIN THE R/W.
7. THE PUBLIC SERVICES DEPARTMENT MUST BE NOTIFIED A MINIMUM OF 48 HOURS PRIOR TO UTILITY TESTING. THE CONTRACTOR MUST CONTACT JOSH KRAMM, UTILITY LINE MANAGER, AT HIS OFFICE (352) 735-7151 OR CELL (352) 516-3691, DISTRIBUTION SUPERVISOR - OFFICE (352) 735-7151 OR CELL PHONE (352) 460-7922, RUSSELL HOPPER, COLLECTION & LIFT STATION SUPERVISOR - OFFICE (352) 735-7151 OR CELL PHONE (352) 973-2032. HYDROSTATIC TESTING SHALL BE PER THE APPLICABLE PROVISIONS AS SET FORTH IN AWWA STANDARDS. (MINIMUM 150 PSI @ 2 HOURS - POTABLE/RECLAIMED AND MINIMUM 100 PSI @ 2 HOURS - FORCE MAINS).
8. GRAVITY SEWER PIPING TESTS SHALL BE IN ACCORDANCE WITH UNI-BELL PVC PIPE ASSOCIATION; "RECOMMENDED PRACTICES FOR LOW-PRESSURE AIR TESTING OF INSTALLED SEWER PIPE". THE CONTRACTOR WILL BE REQUIRED TO PROVIDE VIDEO INSPECTION OF THE ENTIRE LINE DEMONSTRATING SATISFACTORY WORKMANSHIP AND SHOWING POSITIVE FLOW WITHIN THE SANITARY SYSTEM. ANY DEFECTS IN WORKMANSHIP, AREAS OF STANDING WATER OR "BELLIES" SHALL BE CAUSE FOR REJECTION. ONE DVD FORMAT COPY OF THE VIDEO INSPECTION MUST BE PROVIDED TO THE PUBLIC SERVICES DEPARTMENT.
9. THE CONTRACTOR WILL BE REQUIRED TO PROVIDE INSPECTION OF ALL STORM SYSTEM PIPES DEMONSTRATING SATISFACTORY WORKMANSHIP AND SHOWING POSITIVE FLOW WITHIN THE DRAINAGE SYSTEM. ANY DEFECTS IN WORKMANSHIP, AREAS OF STANDING WATER OR "BELLIES" SHALL BE CAUSE FOR REJECTION. ONE DVD FORMAT COPY OF THE VIDEO INSPECTION MUST BE PROVIDED TO THE PUBLIC SERVICES DEPARTMENT.
10. AFTER JUMPER CONNECTION IS REMOVED, WATER & RECLAIMED WATER SERVICES MUST BE LOCKED OUT AND KEY SUPPLIED TO CITY.
11. FOLLOWING SATISFACTORY PRESSURE TESTING, THE CONTRACTOR SHALL DISINFECT ALL SECTIONS OF THE WATER DISTRIBUTION SYSTEM, AND RECEIVE APPROVAL THEREOF FROM THE APPROPRIATE AGENCIES, PRIOR TO PLACING IN SERVICE. ADVANCE NOTICE SHALL BE PROVIDED TO THE CITY BEFORE DISINFECTING PROCEDURE START. THE DISINFECTION SHALL BE ACCOMPLISHED WITH THE APPLICABLE PROVISIONS OF AWWA STANDARD, "DISINFECTING WATER MAINS" AND ALL APPROPRIATE AGENCY APPROVALS.

STANDARD CONSTRUCTION DETAIL
GENERAL NOTES
GU001-1A
ISSUED: 2017
REVISED: --

GENERAL UTILITIES CONSTRUCTION NOTES

12. COPIES OF SATISFACTORY BACTERIOLOGICAL TESTING AND THE FDEP "LETTER OF RELEASE REQUEST" SIGNED BY THE ENGINEER OF RECORD MUST BE SUBMITTED TO THE CITY ENGINEER FOR PROCESSING. NO POTABLE WATER LINE SHALL BE PLACED INTO SERVICE WITHOUT RECEIPT OF FDEP AUTHORIZATION.
13. FDEP CLEARANCE REQUEST MUST BE SUBMITTED THROUGH THE PUBLIC WORKS AND UTILITY DEPARTMENT.
14. EARTHWORK, PAVEMENT AND CONCRETE CONSTRUCTION NOT SPECIFICALLY ADDRESSED BY THE CITY LDC, SHALL BE THE CURRENT FLORIDA DEPARTMENT OF TRANSPORTATION STANDARD SPECIFICATIONS FOR ROAD AND BRIDGE CONSTRUCTION, WHICHEVER IS MORE STRINGENT.
15. COPIES OF ALL MATERIALS AND COMPACTION TESTING PER THE CURRENT STANDARD SPECIFICATIONS FOR ROAD AND BRIDGE CONSTRUCTION MUST BE PROVIDED PRIOR TO CLOSEOUT.
16. THE PUBLIC SERVICES DEPARTMENT REQUIRES A PRE-CLOSEOUT FIELD REVIEW WITH THE CONTRACTOR /SITE DEVELOPER. THE CONTRACTOR MUST CONTACT PUBLIC SERVICES -ENGINEERING AT (352) 735-7151, TO COORDINATE. ALL ISSUES IDENTIFIED AT THE FIELD REVIEW MUST BE ADDRESSED PRIOR TO PUBLIC SERVICES FINAL CLOSE OUT APPROVAL.
17. LIFT STATION START UP WILL REQUIRE A MINIMUM OF 48 HOURS PRIOR NOTIFICATION TO THE CITY. THE CONTRACTOR MUST CONTACT JOSH KRAMM, UTILITY LINE MANAGER, AT (352) 735-7151 OR (352) 551-9263 OR RUSSELL HOPPER, COLLECTION & LIFT STATION SUPERVISOR - OFFICE (352) 735-7151 OR CELL PHONE (352) 973-2032 TO COORDINATE THE START UP INSPECTION.
18. ALL MANUALS FOR LIFT STATION CONTROL PANELS, GENERATORS, AND PUMPS WILL BE REQUIRED PRIOR TO START UP. THESE MANUALS WILL BE SUBJECT TO CITY REVIEW / APPROVAL TO INCLUDE O&M MANUALS. NO LIFT STATION WILL BE ACCEPTED UNTIL SATISFACTORY DOCUMENTATION HAS BEEN PROVIDED. ANY LIFT STATION PUMP, SIZED LARGER THAN 20 HP, SHALL BE PROVIDED WITH A REBUILD KIT CONSISTING OF BEARINGS SEALS, O-RINGS AND WEAR RINGS. ALSO, A TOOL KIT WITH BOX IS REQUIRED.
19. DEDICATION OF IMPROVEMENTS TO THE PUBLIC SHALL BE IN ACCORDANCE WITH THE CITY OF MOUNT DORA LDC 4.3.4(4)(A) - BONDS, 5.3.5(1) - BONDS, AND 7.2.4 - BONDS AND WARRANTIES. THE CITY'S LAND DEVELOPMENT CODE IS AVAILABLE ONLINE AT WWW.MUNICODE.COM FOR YOUR REFERENCE.
20. AS-BUILT DRAWINGS - PER LDC 7.13.6: OWNER / DEVELOPER SHALL PROVIDE FOUR HARD COPIES AND ONE ELECTRONIC OF THE APPROVED FINAL ENGINEERING PLANS CONFORMED TO SHOW ALL AS-BUILT CONDITIONS. AS-BUILTS MUST SHOW ACCURATE MEASUREMENTS OF WATER AND SEWER LINES AND STRUCTURES FROM FIXED KNOWN LOCATIONS WITHIN THE DEVELOPMENT. CERTIFICATION OF THE PROJECT ENGINEER ATTESTING TO THE ACCURACY OF THE DRAWINGS IF REQUIRED, CITY ACCEPTANCE OF IMPROVEMENTS AND / OR ISSUANCE OF OCCUPANCY WILL BE WITHHELD UNTIL SATISFACTORY AS-BUILTS ARE PROVIDED.

STANDARD CONSTRUCTION DETAIL
GENERAL NOTES
GU001-1B
ISSUED: 2017
REVISED: --

GENERAL NOTES:

ALL UTILITY PIPE SHALL BE INSTALLED WITH 3 INCH WIDE SELF ADHESIVE VINYL CONTINUOUS TAPE, FOR IDENTIFICATION PURPOSES. TAPE SHALL BE COLOR CODED AND WORDED AS FOLLOWS:
(NOTE: TRACING WIRE INSULATION SHALL BE SIMILARLY COLOR CODED)

1. POTABLE WATER.
   A. COLOR: BLUE WITH BLACK LETTERING
   B. LETTERING: POTABLE WATER MAIN OR SIMILAR WORDING.
2. RECLAIMED WATER.
   A. COLOR: PURPLE WITH WHITE OR YELLOW LETTERING.
   B. LETTERING: RECLAIMED WATER OR SIMILAR WORDING.
3. FIRE LINES.
   A. COLOR: RED WITH BLACK LETTERING
   B. LETTERING: FIRE LINE OR SIMILAR WORDING.
4. GRAVITY SEWER.
   A. COLOR: BROWN OR GREEN WITH BLACK LETTERING.
   B. LETTERING: SEWER LINE OR SIMILAR WORDING.
5. SEWER FORCE MAIN.
   A. COLOR: GREEN WITH BLACK LETTERING.
   B. LETTERING: SEWER FORCE MAIN OR SIMILAR WORDING.

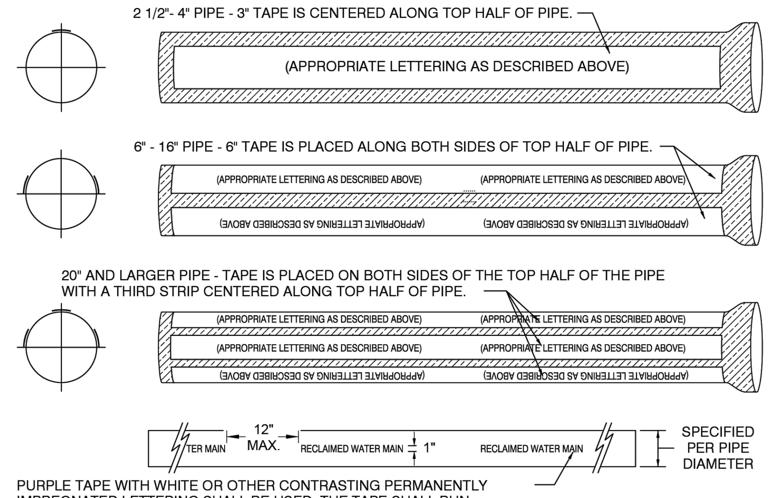

PURPLE TAPE WITH WHITE OR OTHER CONTRASTING PERMANENTLY IMPREGNATED LETTERING SHALL BE USED. THE TAPE SHALL RUN FROM JOINT TO JOINT ALONG THE LENGTH OF THE PIPE.

METAL RECLAIMED WATER MAIN WITH IDENTIFICATION TAPE
NTS

PIPE IDENTIFICATION
DUCTILE IRON
GU003-1
ISSUED: 2017
REVISED: --

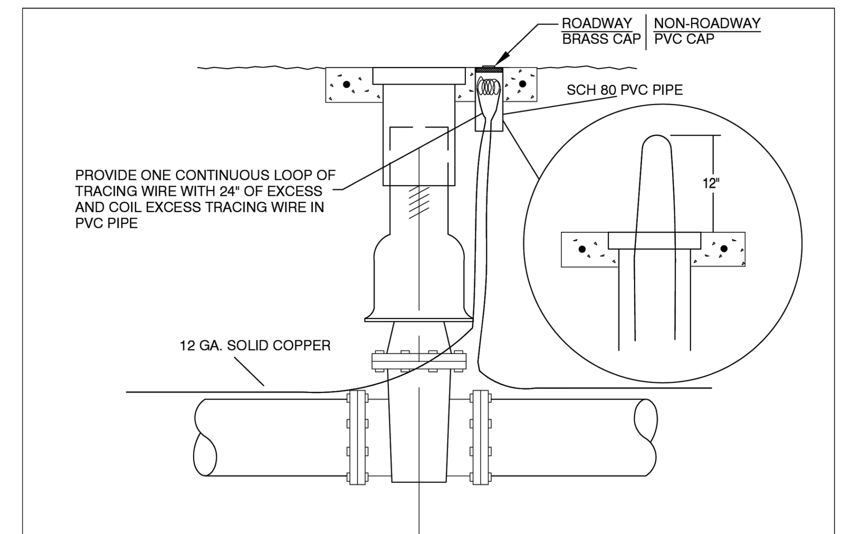

TRACING WIRE GENERAL NOTES:

1. ALL PIPE SHALL BE INSTALLED WITH 12 GA. SOLID COPPER TRACING WIRE AS MANUFACTURED BY COPPERHEAD TAPED TO PIPE AT 10' INTERVALS. TRACING WIRE MUST BE INSTALLED DIRECTLY ABOVE THE PIPE IN A CONTINUOUS CIRCUIT AND BROUGHT TO THE SURFACE AT VALVE BOXES, METER BOXES, MANHOLES, CLEANOUTS, ETC., AS FOLLOWS:
2. POTABLE WATER AND RECLAIMED WATER SYSTEMS-TRACING WIRE SHALL ALLOW TRACEABILITY OF ALL PIPE BRANCHES INCLUDING THOSE FOR HYDRANTS AND SERVICE CONNECTIONS. TRACING WIRE SHALL EXTEND A MINIMUM OF 12" ABOVE GRADE AT EACH INTERVAL AND SHALL BE COILED AND PLACED IN A PVC PIPE FOR EASY ACCESSIBILITY.
3. FORCE MAINS-TRACING WIRE SHALL EXTEND A MINIMUM OF 12" ABOVE GRADE AT EACH INTERVAL AND SHALL BE COILED AND PLACED IN A VALVE OR METER BOX FOR EASY ACCESSIBILITY.
4. ON DEAD END MAINS THE TRACING WIRE SHALL BE PLACED IN A PROPERLY IDENTIFIED PVC VALVE BOX AT THE END OF THE RUN.
5. WATER TIGHT SPLICE SHALL BE APPROVED BY THE CITY OF MT. DORA AND SHALL BE COPPERHEAD DIRECT BURY CONNECTIONS.
6. SEE DETAIL GU002-1 FOR COLOR CODING, INCLUDING WIRE INSTALLATION AND TAPE.

TRACING WIRE
CONNECTION
GU004-1
ISSUED: 2017
REVISED: --

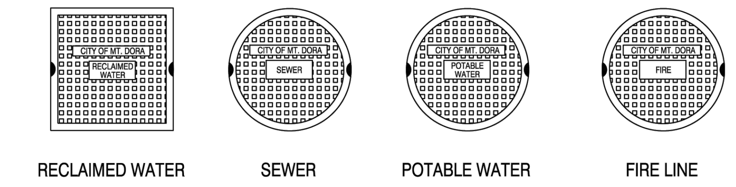

RECLAIMED WATER | SEWER | POTABLE WATER | FIRE LINE

TYPICAL VALVE BOX COVER DETAILS

NOTE: COVERS AND RINGS TO TRAFFIC RATED PER FDOT STANDARDS AND SPECIFICATIONS.

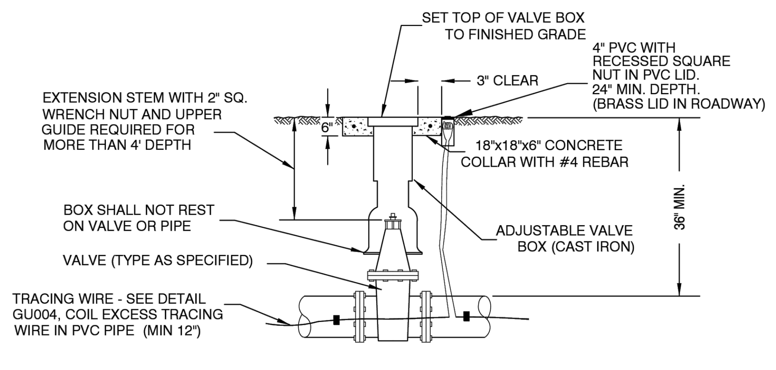

TYPICAL VALVE AND VALVE BOX DETAIL

ADDITIONAL REFERENCE: FIRE HYDRANT DETAIL PW002-4.

VALVE, VALVE BOX, AND COVER
GU005-1
ISSUED: 2017
REVISED: --

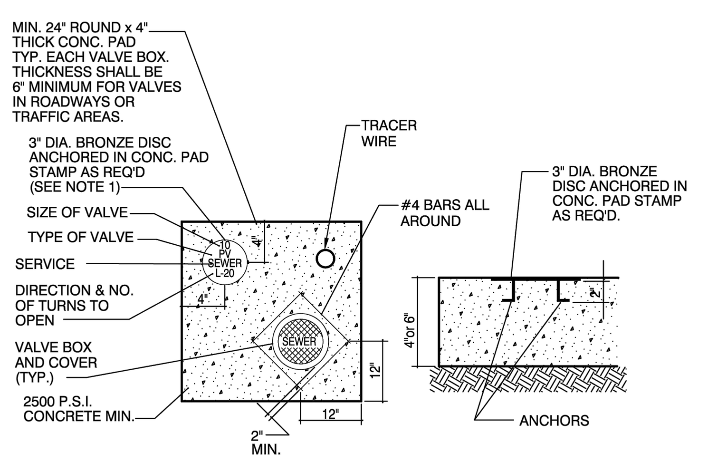

NOTES:
1. BRONZE IDENTIFICATION DISC SHALL BE REQUIRED FOR ALL VALVES

VALVE COLLAR
GU005-2
ISSUED: 2017
REVISED: --

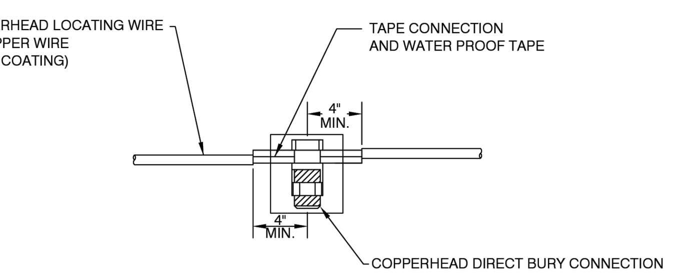

NOTES:
1. AFTER INSTALLATION OF THE LOCATING WIRE THE SYSTEM SHALL BE SUBJECTED TO TESTING, IN THE PRESENCE OF CITY UTILITIES STAFF PRIOR TO BACKFILL, IN ORDER TO THAT THE SYSTEM IS FUNCTIONAL.

NOT TO SCALE

LOCATING WIRE SPLICING
GU0012-1
ISSUED: 2017
REVISED: --

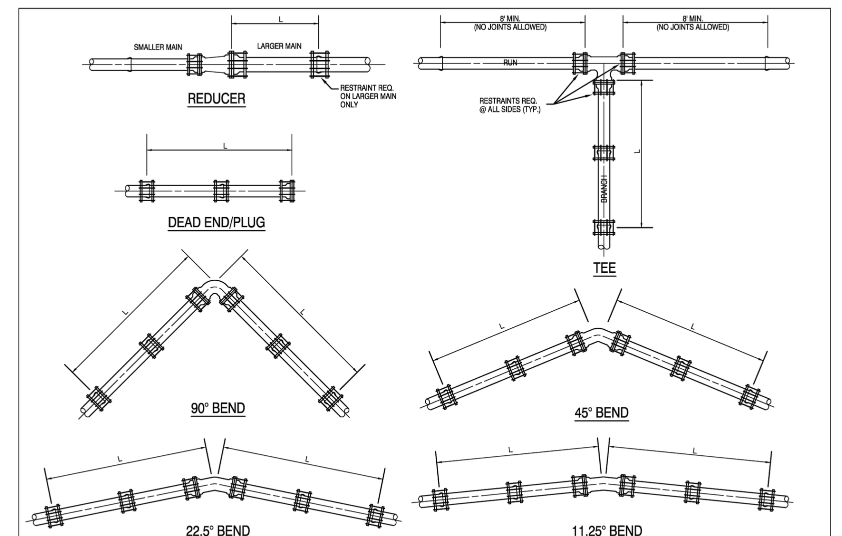

TABLE OF THRUST RESTRAINT LENGTHS

PIPE SIZE (inches)	90° BEND P.V.C. (L)	90° BEND DUCTILE IRON (L)	45° BEND P.V.C. (L)	45° BEND DUCTILE IRON (L)	22 1/2° BEND P.V.C. (L)	22 1/2° BEND DUCTILE IRON (L)	11 1/4" BEND P.V.C. (L)	11 1/4" BEND DUCTILE IRON (L)	TEES P.V.C. (L)	TEES DUCTILE IRON (L)	DEAD END & PLUG P.V.C. (L)	DEAD END & PLUG DUCTILE IRON (L)	REDUCER PIPE SIZES	REDUCER P.V.C. (L)	REDUCER DUCTILE IRON (L)
4	20'	16'	8'	7'	4'	3'	2'	2'	15'	10'	45'	29'	6"x4"	33'	21'
6	28'	22'	12'	9'	6'	4'	3'	2'	33'	21'	63'	40'	8"x6"	34'	22'
8	36'	29'	15'	12'	7'	6'	4'	3'	52'	33'	82'	52'	10"x8"	33'	21'
10	43'	34'	18'	14'	9'	7'	4'	3'	68'	43'	98'	63'	12"x10"	34'	22'
12	50'	40'	21'	17'	10'	8'	5'	4'	84'	54'	116'	74'	16"x12"	63'	40'
16	63'	51'	26'	21'	13'	10'	6'	5'	116'	74'	148'	94'	18"x16"	33'	21'
18	70,	56'	29'	23'	14'	11'	7'	6'	131'	83'	163'	103'	20"x18"	33'	21'
20	75'	61'	31'	25'	15'	12'	7'	6'	145'	92'	178'	113'	20"x20"	62'	39'
24	86'	70'	36'	29'	17'	14'	9'	7'	173'	110'	207'	132'			

THRUST RESTRAINT DESIGN NOTES

1. RESTRAINT JOINTS, FITTINGS, & VALVE REQUIREMENTS CALCULATED BY THE THRUST RESTRAINT DESIGN PROGRAM PROVIDED BY UNI-FLANGE.
2. DATA BASED ON MAX. PRESSURE OF 150 p.s.i., THE UNIFIED SOILS CLASSIFICATION SYSTEM (SOIL TYPE SP), THE PIPE BEDDED IN NATIVE SOIL w/ A MINIMUM OF 2.5' COMPACTED FILL OVER THE PIPE, AND USING A SAFETY FACTOR OF 1.5 FOR THE DATA.
3. ALL FITTINGS & VALVES SHALL HAVE RESTRAINED JOINTS PER SPECIFICATIONS & ALL BELL & SPIGOT JOINTS TO BE RESTRAINED WITH A RESTRAINING HARNESS WITHIN THE REQUIRED LENGTH OF RESTRAINED PIPE (L).
4. THRUST BLOCKS SHALL BE USED ONLY IN EXTRAORDINARY SITUATIONS AND MUST BE APPROVED BY THE CITY ENGINEER.

THRUST RESTRAINT DETAIL
GU0014-1
ISSUED: 2017
REVISED: --

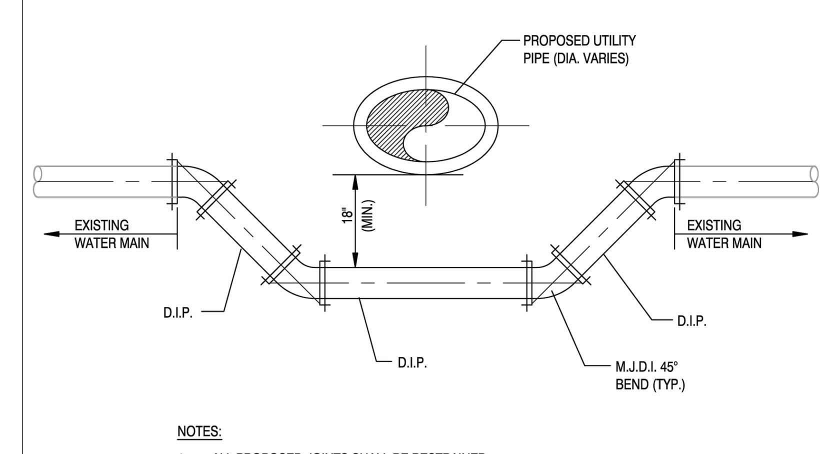

NOTES:
1. ALL PROPOSED JOINTS SHALL BE RESTRAINED.
2. ALL EXISTING JOINTS WITHIN 12' SHALL BE RESTRAINED.
3. ALL PIPING CLEARANCES SHALL BE IN ACCORDANCE WITH CHAPTER 62-555.314 F.A.C.

NOT TO SCALE

WATER LINE CROSSING
GU0015-1
ISSUED: 2017
REVISED: --

General Water Notes

1. Water system components shall be installed in strict accordance with all local codes and regulations, cleaned, disinfected and bacteriologically cleared for service in accordance with the latest AWWA standards and CHAPTER 62-555 Florida Administrative code.
2. All piping shall bear the "NSF" seal for potable water.
3. Water mains shall be pvc conforming to AWWA C-900, DR 18 for pipe sizes 4"-12". Pipes 14" or longer shall be AWWA C-905, DR 18. All couplings, cleaning compounds, solvents, lubricants, and pipe preparation for laying, shall be in accordance with the pipe manufacturers latest recommendations.
4. Depth of water lines to be 36" minimum cover from finish grade.
5. Water mains to be located 6.00' from back of curb or edge of pavement unless otherwise noted.
6. All sleeves under pavement shall extend 5' beyond the back of curb.
7. Disinfecting: following the pressure testing, the contractor shall disinfect all sections of the water distribution system. Disinfection shall be in accordance with the applicable provisions of AWWA standard C651 "Disinfecting water mains", and all appropriate agency approval.
8. All hydrostatic test shall be in accordance with AWWA C600 for ductile iron pipe and C605/M23 for pvc pipe.
9. All water mains shall be installed, pressure and leak tested in accordance with AWWA C600, (62-555.320(21)(b) 1 and 62-555.330, F.A.C. All installation, testing and field procedures must be provided and must conform to the applicable AWWA standards.
10. All piping materials and specifications covering pipes, joints and packing materials, internal coating and linings fittings, specials and appurtenances shall all be in accordance with the corresponding AWWA standards and be conforming to NSF requirements, as may be applicable, with exceptions allowed only if documentation and assurances are provided in compliance with paragraphs 62-555.320(3) (d) 62-555.320 (3) (b), and 62-555.320 (21) (c), F.A.C. The lead use prohibition in rule 62-555.322, F.A.C. shall also apply. Polyethylene tubing shall be per AWWA C901. Underground service lines, and valves shall be per AWWA C800.

COLOR Coding

All water main pipe, including fittings shall be color coded or marked blue as a predominate color to differentiate drinking water from reclaimed water or other water. Underground plastic pipe shall be solid-wall blue pipe, shall have a co-extruded blue external skin, or shall be white or black pipe with blue stripes incorporated into, or applied to, the pipe wall; and underground metal or concrete pipe shall have blue striped applied to the pipe wall. Pipe striped during manufacturing of the pipe shall have continuous stripes that run parallel to the axis of the pipe, that are located at no greater than 90°intervals around the pipe, and will remain intact during and after installation of the pipe. If tape or paint is used to stripe pipe during installation of the pipe, the tape or paint shall be applied in a continuous line that runs parallel to the axis of the pipe and that is located along the top of the pipe; for pipes with an internal diameter of 24 inches or greater, tape or paint shall be applied in continuous lines along each side of the pipe as well as along the top of the pipe. Aboveground pipe as drinking water treatment plants shall be color coded and labeled in accordance with subsection 62-555.320(10), F.A.C., and all other aboveground pipe shall be painted blue or shall be color coated or marked like underground pipe.

Utility Construction Notes (DEP)

62-555.314 Location of Public Water System Mains:

For the purpose of this section, the phrase "Water Mains" shall mean Mains, including treatment Plant process piping, conveying either raw, partially treated, or finished drinking water; Fire Hydrant leads; and service lines that are under the control of a public Water System and that have an inside diameter of three (3") inches or greater.

(1) Horizontal Separation Between Underground Water Mains and Sanitary or Storm Sewers, Wastewater or Storm water Force Mains, Reclaimed Water Pipelines, and On-site Sewage Treatment and Disposal Systems:

(a) New or relocated, underground WATER MAINS shall be laid to provide a horizontal distance of at least (3) Three Feet between the outside of the WATER MAIN and the outside of any existing or proposed Storm Sewer water Force Main, or pipeline conveying reclaimed water regulated under Part III of Chapter 62-610, F.A.C.

PIPE CLEARANCE NOTES
GU0016-2
ISSUED: 2017
REVISED: --

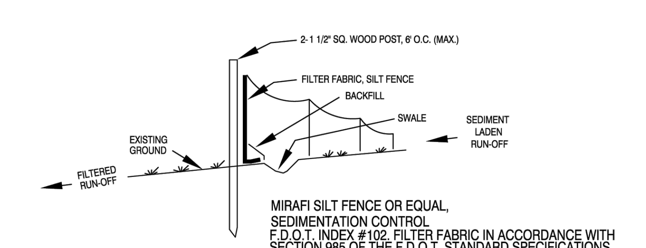

MIRAFI SILT FENCE OR EQUAL, SEDIMENTATION CONTROL F.D.O.T. INDEX #102. FILTER FABRIC IN ACCORDANCE WITH SECTION 985 OF THE F.D.O.T. STANDARD SPECIFICATIONS.

NOTES:
1. TEMPORARY EROSION CONTROL STRUCTURE TO BE UTILIZED DURING CONSTRUCTION AT AREAS DESIGNATED BY ENGINEER OR AREAS ON-SITE WHERE UNSTABILIZED GRADES MAY CAUSE EROSION PROBLEMS. EROSION CONTROL STRUCTURE MAY BE REMOVED AFTER UPSLOPE AREA HAS BEEN STABILIZED BY SOD, OR COMPACTED AS DETERMINED BY CONTRACTOR.
2. CONSTRUCT STORMWATER SYSTEMS BEFORE ANY BUILDING OR ROAD CONSTRUCTION IS STARTED.
   a.) PROTECT SYSTEM FROM SILTING AND DEBRIS BY METHODS PROVIDED IN DETAILS.
   b.) PROTECT SWALE BOTTOM FROM SEALING BY EXCAVATING ALL SILT DEPOSITS DURING CONSTRUCTION. THIS SHALL BE DONE BEFORE SOD & SEEDING & MULCHING IS FINISHED

EROSION CONTROL STRUCTURE
NOT TO SCALE

THE FOLLOWING LIST REPRESENTS A BASIC EROSION AND SEDIMENT CONTROL PROGRAM WHICH IS TO BE IMPLEMENTED TO HELP PREVENT OFF-SITE SEDIMENTATION DURING AND AFTER CONSTRUCTION OF THE PROJECT.

PERMANENT EROSION AND SEDIMENT CONTROL MEASURES SHALL BE INSTALLED AT THE EARLIEST PRACTICAL TIME CONSISTENT WITH GOOD CONSTRUCTION PRACTICES. ONE OF THE FIRST CONSTRUCTION ACTIVITIES SHOULD BE THE PLACEMENT OF PERMANENT AND TEMPORARY EROSION AND SEDIMENT CONTROL MEASURES AROUND THE PERIMETER OF THE PROJECT OR THE INITIAL WORK AREA TO PROTECT THE PROJECT, ADJACENT PROPERTIES AND WATER RESOURCES.

TEMPORARY EROSION AND SEDIMENT CONTROL MEASURES SHALL BE COORDINATED WITH PERMANENT MEASURES TO ASSURE ECONOMICAL, EFFECTIVE AND CONTINUOUS CONTROL THROUGHOUT THE CONSTRUCTION PHASE. TEMPORARY MEASURES SHALL NOT BE CONSTRUCTED FOR EXPEDIENCY IN LIEU OF PERMANENT MEASURES.

EROSION AND SEDIMENT CONTROL MEASURES SHALL BE ADEQUATELY MAINTAINED TO PERFORM THEIR INTENDED FUNCTION DURING CONSTRUCTION OF THE PROJECT.

NECESSARY REPAIRS TO BARRIERS OR REPLACEMENT OF BARRIERS SHALL BE ACCOMPLISHED PROMPTLY.

SEDIMENT DEPOSITS SHOULD BE REMOVED AFTER EACH RAINFALL. THEY MUST BE REMOVED WHEN THE LEVEL OF DEPOSITION REACHES APPROXIMATELY ONE-HALF THE HEIGHT OF THE BARRIER.

MATERIAL FROM SEDIMENT TRAPS SHALL NOT BE STOCKPILED OR DISPOSED OF IN A MANNER WHICH MAKES THEM READILY SUSCEPTIBLE TO BEING WASHED INTO ANY WATERCOURSE BY RUNOFF OR HIGH WATER.

ANY SEDIMENT DEPOSITS REMAINING IN PLACE AFTER THE BARRIERS ARE NO LONGER REQUIRED SHALL BE DRESSED TO CONFORM TO THE EXISTING GRADE, PREPARED AND SEEDED.

EROSION CONTROL DETAIL
GU0020-1
ISSUED: 2017
REVISED: --

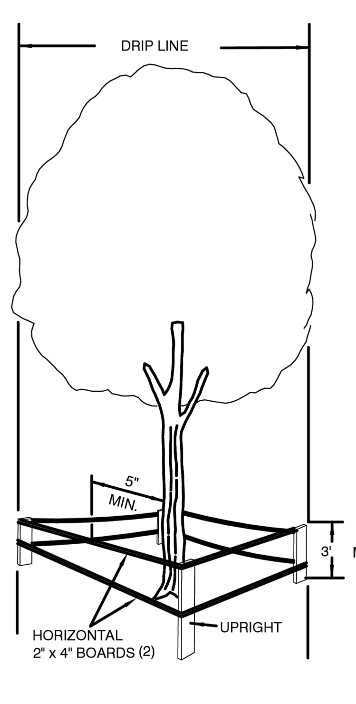

NOTE:
BARRIER MUST BE ERECTED PRIOR TO CONSTRUCTION

WHY A BARRIER?
1. TO PROTECT ALL ABOVE GROUND PORTIONS
2. TO PROTECT SOIL NEAR TREE FROM COMPACTION
3. PROVIDES PHYSICAL AND MENTAL AWARENESS OF TREES' PRESENCE TO EQUIPMENT OPERATORS

WHY IT WORKS
1. NO HEAVY EQUIPMENT ALLOWED INSIDE BARRIER, ONLY HAND LABOR
2. NO CONSTRUCTION MATERIALS OR TEMPORARY SOIL DEPOSITS ALLOWED INSIDE THIS AREA

BY OBSERVING THESE TWO SIMPLE PRINCIPLES, A TREES' CHANCE FOR SURVIVAL IS GREATLY ENHANCED

SPECIFICATIONS FOR WOOD BARRIER
1. MINIMUM RADIUS TO BE PROTECTED IS ENTIRE DRIP LINE
2. MINIMUM 3' IN HEIGHT
3. UPRIGHTS- THE EQUIVALENT OF 2"x4" LUMBER ON 6' MINIMUM CENTERS
4. HORIZONTAL- THE EQUIVALENT OF TWO COURSES OF 2" x 4" LUMBER PAINTED SAFETY YELLOW
5. BARRIERS TO BE ERECTED AROUND TREES TO REMAIN BEFORE CONSTRUCTION OR NEARBY TREES ARE REMOVED
6. BARRIERS TO REMAIN IN PLACE UNTIL ALL PAVING, CONSTRUCTION AND HEAVY EQUIPMENT IS OUT OF AREA

TREE PROTECTION
MEASURES
GU0023-1
ISSUED: 2017
REVISED: -- 2019

Utility Construction Notes (DEP) (CONTINUED)

(b) New or relocated, underground WATER MAINS shall be laid to provide a horizontal distance of at least (3) three feet, and preferably (10) Ten Feet, between the outside of the WATER Main and the outside of any existing or proposed vacuum-type Sanitary Sewer.

(c) New or relocated, underground WATER MAINS shall be laid to provide a horizontal distance of at least (6) Six Feet and preferably (10) Ten Feet, between the outside of the WATER MAIN and the outside of any existing or proposed Gravity- or Pressure-type Sanitary Sewer Wastewater Force Main, or pipeline conveying reclaimed water not regulated under Part III of Chapter62-610 F.A.C. The minimum Horizontal Separation distance between WATER MAINS and Gravity-type Sanitary Sewers shall be reduced to (3) Three Feet where the BOTTOM of the WATER MAIN is laid at least (6) Six Inches above the Top of the Sewer.

(d) New or relocated, underground WATER MAINS shall be laid to provide a horizontal distance of at least (10) Ten Feet between the outside of the WATER MAIN and all parts of any existing or proposed "On site Sewage Treatment and Disposal System" as defined in Section 381.0065(2). F.S. and Rule 64E-6.002. F.A.C.

(2) Vertical Separation Between Underground WATER MAINS and Sanitary or Storm Sewers, Wastewater or Storm water Force Mains, and Reclaimed Water Pipelines:

(a)New or relocated underground WATER MAINS crossing any existing or proposed gravity- or vacuum-type sanitary sewer or storm sewer shall be laid so the outside of the WATER MAIN is at least (6) Six inches, and preferably 12 inches above, or at least 12 inches below the outside of the other pipeline. However, it is preferable to lay the WATER MAIN "ABOVE" the other pipeline.

(b) New or relocated, Underground WATER MAINS crossing any existing or proposed pressure-type sanitary sewer, wastewater or stormwater Force Main, or Pipeline conveying reclaimed water shall be laid so the outside of the WATER MAIN is at least (12) inches ABOVE or BELOW the Outside of the other pipeline. However, it is preferable to lay the WATER MAIN above the other pipeline.

(c) At the Utility crossings described in paragraphs (a) & (b) Above, one full length of Water Main Pipe shall be centered above or below the other pipeline so the WATER MAIN joints will be as far as possible from the other pipeline. Alternatively, at such crossings, the pipes shall be arranged so that all WATER MAIN Joints are at least (3) Three feet from all joints in Vacuum-type Sanitary Sewers, Storm Sewers, Stormwater Force Mains, or pipelines conveying reclaimed water regulated under Part III of Chapter62-610, F.A.C., and at least (6) Six Feet from all joints in Gravity- or Pressure- type Sanitary Sewers, Wastewater force mains, or pipelines conveying reclaimed water not regulated under Part III of Chapter 62-610, F.A.C.

(3) Separation Between WATER MAINS and Sanitary or Storm Sewer Manholes:

(a)No WATER MAIN shall pass thru, or come into contact with any part of a Sanitary Manhole.

(4) Separation Between Fire Hydrant Drains and Sanitary or Storm Sewers, Wastewater or Stormwater Force Mains, reclaimed Water Pipelines, and On-Site Sewage Treatment and Disposal Systems. New or relocated Fire Hydrants with underground Drains shall be located so that the drains are at least (3) Three Feet from any existing or proposed storm sewer, Stormwater force main, or pipeline conveying reclaimed water regulated under Part III of Chapter 62-610, F.A.C.; at least (3) Three Feet, and preferably (10) Ten Feet, from any existing or proposed gravity- or Pressure-type Sanitary Sewer,Wastewater force main, or pipeline conveying reclaimed water not regulated under Part III of Chapter 62-610, F.A.C.; and at least (10) Ten Feet from any existing or proposed "on-site sewage treatment and disposal system" as defined in Section 381.0065(2), F.S. and Rule 64E-6.002, F.A.C.

(5) Exceptions/Mitigation:
Adhere to the above Constraints and Separations in items 1 through 4 shall be Complied to, "WITHOUT EXCEPTION". If for some reason where it is not technically feasible or Economically Sensible that items 1 through 4 cannot be complied with, Contractor will Stop Work and Notify the Engineer of record for the appropriate solution which will be submitted to "The Department of Environmental Protection" for APPROVAL, prior to work commencement.

PIPE CLEARANCE NOTES
GU0016-2B
ISSUED: 2017
REVISED: --

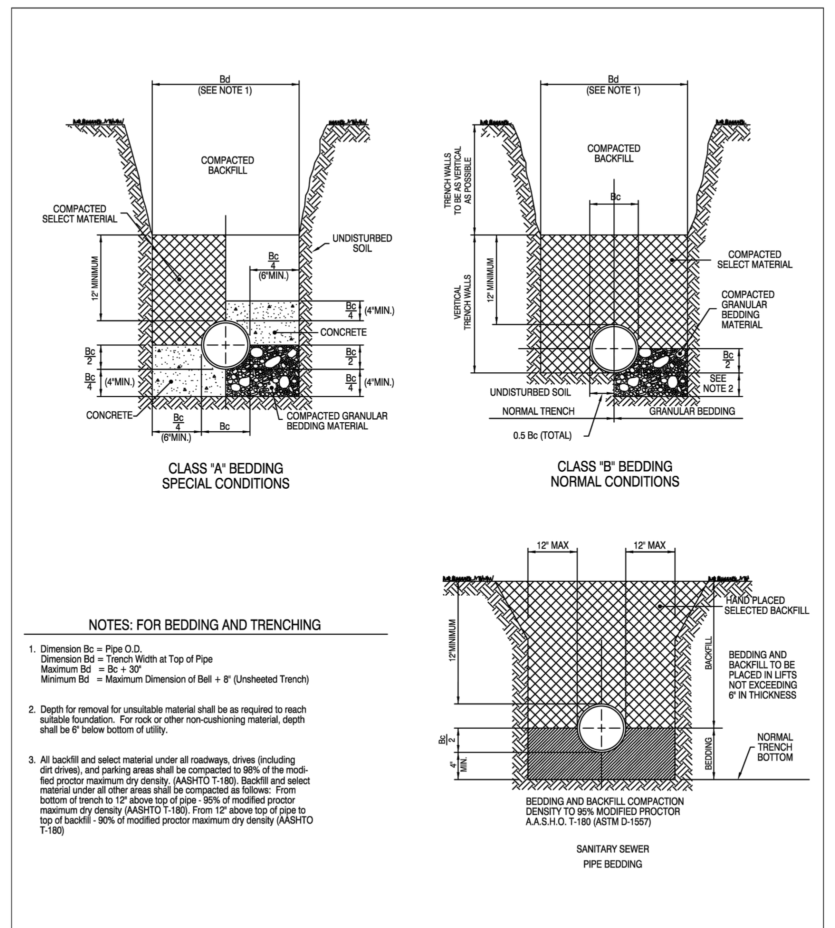

NOTES: FOR BEDDING AND TRENCHING

1. Dimension Bc = Pipe O.D.
   Dimension Bd = Trench Width at Top of Pipe
   Maximum Bd = Bc + 30"
   Minimum Bd = Maximum Dimension of Bell + 8" (Unsheeted Trench)
2. Depth for removal for unsuitable material shall be as required to reach suitable foundation. For rock or other non-cushioning material, depth shall be 6" below bottom of utility.
3. All backfill and select material under all roadways, drives (including dirt drives), and parking areas shall be compacted to 98% of the modified proctor maximum dry density. (AASHTO T-180). Backfill and select material under all other areas shall be compacted as follows: From bottom of trench to 12" above top of pipe - 95% of modified proctor maximum dry density (AASHTO T-180). From 12" above top of pipe to top of backfill - 90% of modified proctor maximum dry density (AASHTO T-180)

NOT TO SCALE

BEDDING DETAILS
GU0017-1
ISSUED: 2017
REVISED: --

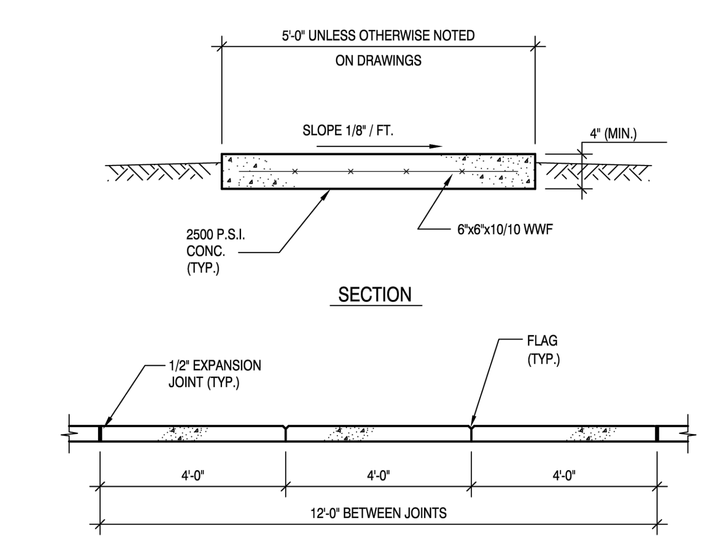

NOT TO SCALE

CONCRETE WALKWAY DETAIL
GU0019-1
ISSUED: 2017
REVISED: --

NO.	DATE	DESCRIPTION
1	11/21/2024	REVISED PER SJRWMD & CITY OF MOUNT DORA COMMENTS

REVISION BLOCK

SANTOS MEDINA, III, P.E.
STATE OF FLORIDA
PROFESSIONAL ENGINEER
LICENSE NO. 74539

11/21/2024

NOT VALID UNLESS PHYSICALLY, DIGITALLY, OR ELECTRONICALLY SIGNED AND SEALED

DESIGNED BY: SM
DRAWN BY: DH
CHECKED BY: SM

SLOAN Engineering Group
150 SOUTH WOODLAWN AVENUE, BARTOW, FL 33830
PHONE: (863) 800-3046 - FAX: (863) 800-1159
FLORIDA CERTIFICATE OF AUTHORIZATION (FLCA) #26247

CLIENT: EUDORA ROAD, LLC
PROJECT: FREDDY'S FROZEN CUSTARD - MOUNT DORA
2495 EUDORA RD, MT DORA, FLORIDA 32757

CITY DETAILS

PROJECT NO. 2575
SHEET C703

X:\Engineering\2575-FFC of Central Florida-Freddy's Frozen Custard-Mt Dora\cad\2575 Base.dwg, C703-City Details, 11/21/2024 8:53:38 AM, dharper, 1:1

PW001-1A

WATER SYSTEM CONSTRUCTION GENERAL NOTES

1. THE CITY'S PUBLIC WORKS DEPARTMENT SHALL BE NOTIFIED PRIOR TO BEGINNING ANY WATER SYSTEM CONSTRUCTION.
2. DE-WATERING SHALL BE PROVIDED TO KEEP GROUND WATER ELEVATION A MINIMUM OF 6 INCHES BELOW PROPOSED WATER MAIN.
3. ALL WATER MAINS SHALL BE INSTALLED ON A FIRM FOUNDATION WITH ALL UNSUITABLE MATERIAL (MUCK, ROCK, COQUINA, ETC.) REMOVED AND REPLACED WITH CLEAN GRANULAR MATERIAL.
4. TRENCHES SHALL BE BACK FILLED WITH MATERIAL ACCEPTABLE TO THE CITY, WITH A MINIMUM COMPACTION OF 98% (AASHTO T-180) IN PAVED AREAS AND 95% (AASHTO T-180) IN UNPAVED AREAS.
5. IT SHALL BE THE CONTRACTOR'S RESPONSIBILITY TO INSURE THAT TRENCH COMPACTION TESTS BE PROVIDED AT POINTS 1 FOOT ABOVE THE PIPE AND AT 2 FEET VERTICAL INTERVALS TO FINISH GRADE, AT A MINIMUM SPACING OF EVERY 300 FEET.
6. PIPE WARNING TAPE SHALL BE LOCATED 18 INCHES BELOW FINISH GRADE FOR ALL PIPES. PIPE IDENTIFICATION TAPE SHALL BE PROVIDED ON ALL PIPES.
7. ALL SINGLE RESIDENTIAL WATER SERVICES SHALL BE MINIMUM 1" AND DOUBLE RESIDENTIAL SERVICES SHALL BE MINIMUM 1-1/2" BLACK OR BLUE POLYETHYLENE TUBING. POLYBUTYLENE SHALL NOT BE USED.
8. ALL WATER SERVICE ENDINGS SHALL BE MARKED BY 2"x4" LUMBER (PRESSURE TREATED). ALL SERVICE SHALL EXTEND 6 INCHES ABOVE GRADE, SECURED TO THE BASE OF THE LUMBER. ALL SERVICES MUST BE ADJUSTED TO FINAL METER BOX LOCATION BY OWNER PRIOR TO INITIAL METER INSTALLATION.
9. WATER VALVES SHALL BE PLACED AT ALL STREET INTERSECTIONS AND AT MAXIMUM SPACING OF 1,000 FEET FOR RESIDENTIAL SERVICE (500' FOR COMMERCIAL, MULTIFAMILY AND INDUSTRIAL). AT ALL WATER TEES AND CROSSES, VALVES SHALL BE INSTALLED ON ALL BRANCHES.
10. APPROVED WATER VALVE TYPES ARE THE FOLLOWING:
    A. BRASS BALL-TYPE VALVE FOR VALVES LESS THAN 2" DIAMETER.
    B. STANDARD GATE VALVES 2" AND LARGER DIAMETER, RESILIENT WEDGE GATE VALVES (AWWA C-509)
    C. TAPPING VALVES WITH MECHANICAL TAPPING SLEEVE FOR SIZE ON SIZE STAINLESS STEEL.

POTABLE WATER GENERAL NOTES | PW001-1A | ISSUED: 2017 | REVISED: --

PW001-1B

WATER SYSTEM CONSTRUCTION GENERAL NOTES

11. ALL POTABLE WATER VALVE BOXES SHALL BE ADJUSTED TO FINISH GRADE AND THE CAPS SHALL BE PAINTED BLUE TO MAKE THEM PLAINLY VISIBLE.
12. AS STANDARD PRACTICE, WATER MAINS SHALL BE INSTALLED 4 FEET OFF THE BACK OF THE CURB ON THE OPPOSITE SIDE OF THE RECLAIMED WATER LINES OR AS APPROVED BY THE CITY.
13. ALL WATER MAINS SHALL BE NSF APPROVED FOR POTABLE WATER USE, AND HAVE A MINIMUM COVER OF 36 INCHES. IN SPECIAL CASES WHERE IT IS IMPOSSIBLE OR INAPPROPRIATE TO PROVIDE ADEQUATE COVER, DUCTILE IRON PIPE OR ENCASEMENT MAY BE USED AS APPROVED BY THE CITY AND FDEP.
14. ALL WATER MAINS TO BE CLEARED FOR SERVICE SHALL BE FLUSHED, DISINFECTED, PRESSURE TESTED, AND BACTERIOLOGICALLY CLEANSED FOR SERVICE, IN ACCORDANCE WITH THE LATEST AWWA STANDARDS AND THE FLORIDA DEPARTMENT OF ENVIRONMENTAL PROTECTION REQUIREMENTS.
15. WATER MAINS SHALL BE PVC AWWA CLASS C-900, MINIMUM CL-150 (DR-18) DUCTILE IRON PIPE PRESSURE RATING, STANDARD CEMENT LINED, UNLESS OTHERWISE APPROVED BY THE CITY.
16. UPON CONSTRUCTION COMPLETION AND ACCEPTANCE OF THE SYSTEM, IT SHALL BE THE DESIGN ENGINEER'S RESPONSIBILITY TO INSURE THAT THE SYSTEM IS PROPERLY CERTIFIED AND ACCEPTED BY THE DEPARTMENT OF ENVIRONMENTAL PROTECTION OR THE CITY PUBLIC WORKS AND "AS-BUILTS" ARE PROVIDED TO THE CITY, PRIOR TO ANY USE OF THIS SYSTEM.
17. WATER DISTRIBUTION SYSTEM SHALL BE DESIGNED TO COMPLY WITH THE CITY'S FIRE (WATER) FLOW CODE AND NFPA 291.
18. ALL WATER SERVICES SHALL BE MARKED ALONG THE OUTSIDE EDGE OF CURB WITH UPSIDE-DOWN "W" OR BY METAL TABS SET INTO PAVEMENT. VALVES FOR WATER SHALL BE MARKED BY A "V" OR METAL TABS SET INTO THE PAVEMENT. BLOW-OFFS SHALL BE MARKED WITH A "B".
19. BLUE REFLECTORS SHALL BE SECURELY AFFIXED TO ROADWAY (CENTER LINE OF ROAD) ADJACENT TO HYDRANT LOCATION.
20. WATER SERVICES SHOULD BE DOUBLE 1-1/2" SERVICES LOCATED AT SIDE LOT LINES, ALTERNATING WITH RECLAIMED WATER SERVICE LOCATIONS. IN INSTANCES WHERE WATER SERVICES NEED TO BE OFFSET, 1" SERVICES SHALL BE SPECIFIED. THESE SERVICES MAY BE OFFSET FROM THE LOT LINE A MAXIMUM DISTANCE OF 5.0 FEET.
21. OUT-OF-SERVICE FIRE HYDRANTS MUST BE CLEARLY MARKED (RED RING ON NOZZLE, LABELED DISK ON NOZZLE) FACING ROADWAY. ALL LABELS AND DISK PROVIDED BY THE CITY OR BLACK BAGGED - NOTIFY THE FIRE DEPT. THAT THE HYDRANT IS OUT OF SERVICE.
22. PRIOR TO TAKING ANY WATER LINES OUT OF SERVICE, THE CONTRACTOR SHALL NOTIFY THE CITY AND AFFECTED CUSTOMERS, IN WRITING, 48-HOURS PRIOR TO SHUTDOWN WITH CITY APPROVAL.
23. WATER SYSTEMS WILL BE PRESSURE TESTED AT 150 PSI STATIC PRESSURE FOR A PERIOD OF 2 HOURS PER AWWA STANDARDS. PRIVATE WATER SYSTEMS SUPPLYING FIRE HYDRANTS OR FIRE SPRINKLER SYSTEMS SHALL BE TESTED AT 200 PSI FOR 2 HOURS IN ACCORDANCE WITH NFPA 13. NOTIFY FIRE AND BUILDING DEPARTMENTS PRIOR TO TESTING.

POTABLE WATER GENERAL NOTES | PW001-1B | ISSUED: 2017 | REVISED: --

PW001-1C

WATER SYSTEM CONSTRUCTION GENERAL NOTES

24. MEGALUGS, SPLIT-RESTRAINED BOLTLESS RESTRAINED JOINTS, OR GRIPPER GASKETS SHALL BE USED ON ALL RESTRAINED JOINT INSTALLATIONS, MINIMUM DEPTH OF BURY ON ALL PIPES NOT MEETING REQUIRED COVER REQUIREMENTS SHALL FOLLOW THE MOST RECENT DIPRA THRUST RESTRAINT DESIGN GUIDELINES.
25. WATER VALVES SHALL BE COMPLETELY OPENED BY THE CITY, IN THE PRESENCE OF THE CONTRACTOR, PRIOR TO FINAL ACCEPTANCE OF ANY NEW WATER SYSTEM.
26. ALL FIRE HYDRANTS SHALL BE CONSTRUCTED TO MAKE THEM EASILY ACCESSIBLE TO FIRE PERSONNEL IN CASE OF A FIRE. THE MAIN NOZZLE SHOULD ALWAYS FACE THE STREET AND BE 18" - 22" ABOVE FINAL GRADE.
27. HYDRANT LOCATION AND SPACING SHALL BE AS PER ARTICLE 7.13.2 OF THE LAND DEVELOPMENT CODE.

7.13. - WATER DISTRIBUTION SYSTEMS.

7.13.1.

GENERAL. THIS SECTION SETS FORTH THE GENERAL REQUIREMENTS FOR DESIGN AND INSTALLATION OF WATER DISTRIBUTION SYSTEMS FOR POTABLE WATER SERVICE.

7.13.2.

DESIGN STANDARDS.

1.

REFERENCE: NORMAL FLOW DEMANDS FOR DESIGN SHALL BE CALCULATED ON THE BASIS OF FULL ULTIMATE DEVELOPMENT AS KNOWN, OR PROJECTED. THE AVERAGE DAILY FLOW FOR DOMESTIC USE SHALL BE CALCULATED AT THE MINIMUM RATE OF 135 GALLONS PER DAY PER CAPITA, WITH 3.5 PERSONS PER SINGLE-FAMILY RESIDENCE, AND 2.5 PERSONS PER MULTIFAMILY OR MOBILE HOME DWELLING UNIT. MAXIMUM DAY INSTANTANEOUS DEMAND TO BE USED FOR DESIGN SHALL BE 1.0 GALLON PER MINUTE (GPM) PER SINGLE-FAMILY RESIDENCE AND 0.7 GPM PER DWELLING UNIT FOR EACH MULTIFAMILY OR MOBILE HOME UNIT. FLOW DEMANDS FOR COMMERCIAL, INDUSTRIAL OR OTHER SPECIAL DEVELOPMENTS SHALL BE ESTABLISHED FROM EXISTING RECORDS OR BY ESTIMATED PROJECTIONS, USING THE BEST AVAILABLE DATA.

2.

WATER DISTRIBUTION SYSTEMS AND/OR WATER MAIN EXTENSIONS SHALL BE DESIGNED AND CONSTRUCTED IN ACCORDANCE WITH THE FIRE PROTECTION REQUIREMENTS OF THE INSURANCE SERVICES OFFICE (NATIONAL BOARD OF FIRE UNDERWRITERS), AS STATED IN THEIR PUBLICATION "GUIDE FOR THE DETERMINATION OF REQUIRED FIRE FLOWS," IF NOT IN CONFLICT WITH THE FOLLOWING:

A.

FIRE FLOWS IN SINGLE-FAMILY RESIDENTIAL AREAS SHALL PROVIDE A MINIMUM OF 600 GPM AT A 20 PSI RESIDUAL PRESSURE.

POTABLE WATER GENERAL NOTES | PW001-1C | ISSUED: 2017 | REVISED: --

PW001-1D

B.

FIRE FLOWS IN COMMERCIAL, INSTITUTIONAL, INDUSTRIAL AREAS AND APARTMENT OR MULTIUNIT COMPLEXES, SHALL PROVIDE A MINIMUM OF 1,500 GPM AT A 20 PSI RESIDUAL PRESSURE. LARGER COMMERCIAL/INDUSTRIAL, MAJOR SHOPPING CENTERS, SCHOOLS, AND SIMILAR USES SHALL HAVE A FIRE FLOW CAPACITY AS DETERMINED NECESSARY BY THE FIRE DEPARTMENT.

C.

FIRE HYDRANTS: DISTANCE FROM OR SPACING OF FIRE HYDRANTS SHALL BE A MINIMUM OF 600 FEET FROM THE FURTHERMOST POINT OF ANY RESIDENTIAL STRUCTURE AND 300 FEET FROM THE FURTHERMOST POINT OF ANY COMMERCIAL STRUCTURE, AS THE FIRE DEPARTMENT WOULD LAY HOSE OR AS OTHERWISE SPECIFIED BY THE FIRE DEPARTMENT TO MEET DETERMINED WATER FLOW REQUIREMENTS FOR FIRE PROTECTION AND/OR INCREASE FIRE PROTECTION EFFECTIVENESS. FIRE HYDRANTS SHALL BE CONNECTED TO WATER MAINS OF EIGHT-INCH MAINS IN ALL AREAS. CONNECTION TO DEAD END STUBS ARE ACCEPTABLE, PROVIDED THAT SAID STUBBED WATER MAIN IS NOT LESS THAN EIGHT INCHES AND WILL PROVIDE ACCEPTABLE FLOW.

D.

SYSTEM SIZE COMPUTATION: THE MINIMUM DESIGN FOR WATER DISTRIBUTION SYSTEMS SHALL PROVIDE FOR AT LEAST 100 PERCENT OF THE COMBINED MAXIMUM DAY-DEMAND RATE AND REQUIRED FIRE FLOW FOR SAID RATE, WITH SPECIAL PROVISIONS FOR PEAK FLOWS IN EXCESS THEREOF. THE ALLOWABLE MINIMUM SERVICE PRESSURE UNDER SAID DESIGN CONDITION SHALL NOT BE LESS THAN 20 POUNDS PER SQUARE INCH. DESIGN COMPUTATION SHALL BE BY THE "HARDY CROSS" PROCEDURE, OR OTHER APPLICABLE METHODS, AS DICTATED BY THE SYSTEM CONFIGURATION.

DESIGN FLOWS AND METHOD OF COMPUTATION SHALL BE SUBJECT TO REVIEW AND APPROVAL BY THE CITY.

E.

VALVE LOCATIONS: VALVES SHALL BE PROVIDED FOR ALL BRANCH CONNECTIONS, LOOP ENDS, FIRE HYDRANT STUBS, OR OTHER LOCATIONS, AS REQUIRED TO PROVIDE AN OPERABLE, EASILY MAINTAINED, AND REPAIRED WATER DISTRIBUTION SYSTEM. VALVES ARE TO BE PLACED SO THAT THE MAXIMUM ALLOWABLE LENGTH OF WATER MAIN REQUIRED TO BE SHUT DOWN FOR REPAIR WORK SHALL BE 500 FEET IN COMMERCIAL, INDUSTRIAL OR HIGH-DENSITY RESIDENTIAL DISTRICTS, OR 1,000 FEET IN OTHER AREAS.

POTABLE WATER GENERAL NOTES | PW001-1D | ISSUED: 2017 | REVISED: --

PW001-1E

7.13.3.

STANDARD REQUIREMENTS.

1.

GENERAL: THE MATERIALS OF CONSTRUCTION AND GENERAL INSTALLATION PROCEDURES, WITH THE EXCEPTION OF FIRE HYDRANTS, SHALL COMPLY WITH THE SPECIFIC APPLICABLE STANDARDS SET FORTH UNDER SECTION 7.3, "UTILITY EXCAVATION, TRENCHING AND BACKFILLING," SECTION 7.4, "BORING AND JACKING," AND SECTION 7.5, "PIPE, FITTINGS, VALVES AND APPURTENANCES," AS WELL AS "STANDARD DETAILS-WATER DISTRIBUTION SYSTEMS."

2.

FIRE HYDRANTS: HYDRANTS SHALL COMPLY WITH AWWA STANDARD C502, "FIRE HYDRANTS FOR ORDINARY WATER WORKS SERVICE," AND SHALL BE EQUIPPED WITH A MINIMUM OF ONE PUMPER OUTLET NOZZLE 4½ INCHES IN DIAMETER AND TWO HOSE NOZZLES 2½ INCHES IN DIAMETER. THREADS, NOZZLE CAPS, OPERATING NUTS AND COLOR SHALL CONFORM TO CITY STANDARDS. UNITS SHALL BE TRAFFIC TYPE WITH BREAKABLE SAFETY CLIPS OR FLANGE, AND STEM WITH SAFETY COUPLING LOCATED BELOW BARREL BREAK LINE TO PRECLUDE VALVE OPENING. HYDRANTS SHALL BE DRY TOP TYPE. OUTLET NOZZLES SHALL BE ON THE SAME PLANE, WITH MINIMUM DISTANCE OF 18 INCHES FROM CENTER OF NOZZLES TO GROUND LINE. VALVE SHALL BE COMPRESSION TYPE WITH 5¼ INCHES MINIMUM OPENING UNLESS OTHERWISE REQUESTED AND SHOW INLET CONNECTION TO BE SIX INCHES MINIMUM.

A.

HYDRANTS SHALL BE INSTALLED PLUMB AND IN TRUE ALIGNMENT WITH THE CONNECTION PIPES TO THE WATER MAIN. THEY SHALL BE SECURELY BRACED AGAINST THE END OF THE TRENCH (UNDISTURBED SOIL) WITH CONCRETE THRUST BLOCKS. THE GRAVEL OR CRUSHED STONE FOR THE DRAIN SUMP, FOLLOWED BY BACKFILLING, SHALL BE CAREFULLY PLACED AND COMPACTED. INSTALLED HYDRANTS SHALL BE PAINTED RED FOR THE FINAL COAT.

B.

HYDRANT PLACEMENT IS TO BE A MINIMUM OF SIX FEET AND A MAXIMUM OF NINE FEET FROM THE CURB OR PAVED ROAD SURFACE UNLESS OTHERWISE APPROVED. THE CENTER OF THE STEAMER PORT SHALL BE 18 INCHES MINIMUM AND 24 INCHES MAXIMUM ABOVE FINAL GRADE. STEAMER PORT SHALL BE CORRECTLY POSITIONED FOR THE PROPER CONNECTION, WITH THE APPROVAL OF THE CITY (WATER AND FIRE DEPARTMENT).

3.

JOINT RESTRAINING: PRESSURE PIPING FITTINGS AND OTHER ITEMS REQUIRING RESTRAINT, SHALL BE BRACED WITH 2,500 PSI CONCRETE THRUST BLOCKS OR OTHER RESTRAINING ASSEMBLIES. SAID RESTRAINING DEVICES SHALL BE DESIGNED FOR THE MAXIMUM PRESSURE CONDITION (TESTING) AND THE SAFE BEARING LOADS FOR HORIZONTAL THRUST, IF THRUST BLOCKING IS USED.

POTABLE WATER GENERAL NOTES | PW001-1E | ISSUED: 2017 | REVISED: --

PW001-1F

4.

PIPE DEPTH AND PROTECTION: THE STANDARD MINIMUM COVER FOR WATER DISTRIBUTION SYSTEMS SHALL BE THREE FEET FROM THE TOP OF THE FINISH GRADE. HOWEVER, SHOULD THIS DESIGN NOT BE FEASIBLE, PROTECTIVE CONCRETE SLABS SHALL BE PROVIDED OVER THE PIPE WITHIN THE LIMITS OF THE LESSER COVER. WHERE WATERWAYS, CANALS, DITCHES OR OTHER CUTS ARE CROSSED, DUCTILE IRON PIPE SHALL BE INSTALLED ACROSS AND TO TEN FEET EACH SIDE OF THE BOTTOM. ADDITIONALLY, APPROVED UTILITY CROSSING SIGNS SHALL BE PLACED ON THE PIPE ALIGNMENT AT EACH SIDE OF THE CANAL, ETC.

5.

CONNECTIONS AT STRUCTURE: WHERE PIPES ARE TO EXTEND INTO OR THROUGH STRUCTURES, FLEXIBLE JOINTS ARE TO BE PROVIDED AT THE WALL FACE.

6.

SPECIAL EXTERIOR PROTECTION FOR CORROSION: EXTRA PROTECTION SHALL BE PROVIDED FOR UNDERGROUND CAST OR DUCTILE IRON PIPE AND FITTINGS WITHIN AREAS OF SEVERE CORROSIVE CONDITIONS. THIS SHALL BE ACCOMPLISHED BY THE INSTALLATION OF POLYETHYLENE ENCASEMENT, THROUGH THE AREA OF CONCERN. THE SOIL TEST EVALUATION TO DETERMINE THE NECESSITY FOR EXTRA PROTECTION IN SUSPECT AREAS SHALL BE AS SET FORTH IN ANSI STANDARD A21.5. ADDITIONALLY, WHERE OTHER EXISTING UTILITIES ARE KNOWN TO BE CATHODICALLY PROTECTED, CAST OR DUCTILE IRON PIPE CROSSING SAID UTILITY SHALL BE INSTALLED PARALLEL TO AND WITHIN TEN FEET OF, PROTECTION SHALL ALSO BE PROVIDED. STEEL PIPE SHALL NOT BE INSTALLED IN SEVERE CORROSION AREAS.

7.

AIR VENTING AND BLOWOFFS: WHERE THE WATERMAIN PROFILE IS SUCH THAT AN AIR POCKET OR ENTRAPMENT COULD OCCUR, RESULTING IN FLOW BLOCKAGE, METHODS FOR AIR RELEASE SHALL BE PROVIDED. AIR VENTING CAPABILITIES SHALL BE PROVIDED FOR DISTRIBUTION MAINS BY APPROPRIATELY PLACING FIRE HYDRANTS, BLOWOFFS, OR OTHER MANUAL DEVICES. AT CRITICAL POINTS ON MAJOR MAINS, AUTOMATIC AIR RELEASE ASSEMBLIES SHALL BE INSTALLED. SPECIAL CARE SHALL BE TAKEN TO PRECLUDE ANY CROSS-CONNECTION POSSIBILITY IN THE DESIGN OF AUTOMATIC AIR RELEASE VALVE APPLICATION. ALL DEAD-END WATER MAINS, TEMPORARY OR PERMANENT, SHALL BE EQUIPPED WITH A MANUALLY OPERATED BLOWOFF AT THE TERMINAL.

POTABLE WATER GENERAL NOTES | PW001-1F | ISSUED: 2017 | REVISED: --

PW001-1G

8.

SERVICE CONNECTIONS: CONNECTIONS TO WATER MAINS FOUR INCHES AND LARGER SHALL BE MADE BY DRILLING THE APPROPRIATE SIZE HOLE AND INSTALLATION OF SERVICE SADDLES, WITH SERVICES TO SMALLER SIZES ACCOMPLISHED BY IN-LINE FITTINGS. A FITTING WITH THE SERVICE LINE EXTENDED TO THE PROPERTY LINE OR EASEMENT LINE, PERPENDICULAR TO SAID LINE, AND TERMINATING WITH A PLUGGED CURB STOP AND METER BOX WITH STANDARD PLASTIC METER BOX WITH CAST IRON LID. CONCRETE BOXES SHALL BE USED IN HIGH TRAFFIC AREAS PENDING METER INSTALLATION. ON CURBED STREETS THE EXACT LOCATION FOR EACH INSTALLED SERVICE SHALL BE MARKED BY ETCHING OR CUTTING A "W" IN THE CONCRETE CURB AND PAINTED BLUE. WHERE NO CURB EXISTS OR IS PLANNED, LOCATIONS SHALL BE ADEQUATELY MARKED BY A ONE-HALF-INCH STEEL REBAR, THREE INCHES BELOW FINAL GRADE.

7.13.4.

TESTING.

1.

THE CONTRACTOR SHALL PERFORM HYDROSTATIC TESTING OF ALL WATER DISTRIBUTION SYSTEMS, AS SET FORTH IN THE FOLLOWING AND SHALL CONDUCT SAID TESTS IN THE PRESENCE OF REPRESENTATIVES FROM THE CITY AND/OR OTHER AUTHORIZED AGENCIES, WITH 48 HOURS ADVANCE NOTICE PROVIDED, IN WRITING.

2.

PIPING AND APPURTENANCES TO BE TESTED SHALL BE WITHIN SECTIONS BETWEEN VALVES, NOT EXCEEDING 2,000 FEET UNLESS ALTERNATE METHODS HAVE RECEIVED PRIOR APPROVAL FROM THE CITY. TESTING SHALL NOT PROCEED UNTIL CONCRETE THRUST BLOCKS ARE IN PLACE AND CURED, OR OTHER RESTRAINING DEVICES INSTALLED. ALL PIPING SHALL BE THOROUGHLY CLEANED AND FLUSHED PRIOR TO TESTING TO CLEAR THE LINES OF ALL FOREIGN MATTER. WHILE THE PIPING IS BEING FILLED WITH WATER, CARE SHALL BE EXERCISED TO PERMIT THE ESCAPE OF AIR FROM EXTREMITIES OF THE TEST SECTION, WITH ADDITIONAL RELEASE COCKS PROVIDED IF REQUIRED.

POTABLE WATER GENERAL NOTES | PW001-1G | ISSUED: 2017 | REVISED: --

PW001-1H

3.

HYDROSTATIC TESTING SHALL BE PERFORMED AT 150 POUNDS PER SQUARE INCH PRESSURE, UNLESS OTHERWISE APPROVED BY THE CITY, FOR A PERIOD OF NOT LESS THAN TWO HOURS. TESTING SHALL BE IN ACCORDANCE WITH THE APPLICABLE AWWA PROVISIONS FOR PVC-AWWA PUBLICATION M-23 AND FOR DIP-AWWA STANDARD C600, SECTION 4. THE ALLOWABLE RATE OF LEAKAGE SHALL BE LESS THAN THE NUMBER OF GALLONS PER HOUR DETERMINED BY THE FOLLOWING FORMULAS:

PVC DIP L = NDP 1/2

7400 L = SDP 1/2

133,200

FOR 150 PSI; TEST: L = 0.00165 ND (PVC)
FOR 150 PSI; TEST: L = 0.000092 SD (DIP)

L = ALLOWABLE LEAKAGE IN GALLONS PER HOUR

N = NUMBER OF JOINTS IN SECTION TESTED

S = LENGTH OF PIPE TESTED, IN FEET

D = NOMINAL DIAMETER OF THE PIPE IN INCHES

P = AVERAGE TEST PRESSURE MAINTAINED DURING THE LEAKAGE TEST IMPOUNDS PER SQUARE INCH GAUGE.

4.

THE TESTING PROCEDURE SHALL INCLUDE THE CONTINUED APPLICATION OF THE SPECIFIED PRESSURE TO THE TEST SYSTEM, FOR THE TWO-HOUR PERIOD, BY WAY OF A PIPE TAKING SUPPLY FROM A CONTAINER SUITABLE FOR MEASURING WATER LOSS. THE AMOUNT OF LOSS SHALL BE DETERMINED BY MEASURING THE VOLUME DISPLACED FROM SAID CONTAINER.

5.

SHOULD THE TEST FAIL, NECESSARY REPAIRS SHALL BE ACCOMPLISHED BY THE CONTRACTOR AND THE TEST REPEATED UNTIL WITHIN THE ESTABLISHED LIMITS. THE CONTRACTOR SHALL FURNISH THE NECESSARY LABOR, WATER, PUMPS, GAUGES AND ALL OTHER ITEMS REQUIRED TO CONDUCT THE REQUIRED WATER DISTRIBUTION SYSTEM TESTING AND PERFORM NECESSARY REPAIRS.

6.

PIPE SECTIONS TO BE PRESSURE TESTED SHALL BE SUBJECTED TO A HYDROSTATIC PRESSURE OF 150 PSI FOR A DURATION OF TWO HOURS BY MEANS OF A PUMP.

POTABLE WATER GENERAL NOTES | PW001-1H | ISSUED: 2017 | REVISED: --

PW001-1I

7.13.5.

DISINFECTING. FOLLOWING THE PRESSURE TESTING: THE CONTRACTOR SHALL DISINFECT ALL SECTIONS OF THE WATER DISTRIBUTION SYSTEM, AND RECEIVE APPROVAL THEREOF FROM THE APPROPRIATE AGENCIES, PRIOR TO PLACING IN SERVICE. ADVANCE NOTICE SHALL BE PROVIDED TO THE CITY BEFORE DISINFECTING PROCEDURES START. THE DISINFECTION SHALL BE ACCOMPLISHED WITH THE APPLICABLE PROVISIONS OF AWWA STANDARD C651, "DISINFECTING WATER MAINS" AND ALL APPROPRIATE AGENCY APPROVALS. COMPUTATION OF THE AMOUNTS OF CHLORINE TO BE USED FOR DISINFECTION SHOULD BE APPROVED BY THE CITY OR ITS ENGINEER CONSULTANT.

1.

CARE SHALL BE TAKEN TO PROVIDE DISINFECTION TO THE TOTAL SYSTEM AND EXTREMITIES SHALL BE CAREFULLY FLUSHED PRIOR TO CHLORINATION. AFTER DISINFECTION AND FINAL FLUSHING HAVE BEEN ACCOMPLISHED, SAMPLES OF WATER FOR BACTERIOLOGICAL ANALYSIS SHALL BE COLLECTED AND SUBMITTED TO AND AS DIRECTED BY THE FLORIDA DEPARTMENT OF ENVIRONMENTAL PROTECTION OR OTHER APPROPRIATE APPROVAL AGENCY. SHOULD THESE SAMPLES OR SUBSEQUENT SAMPLES PROVE TO BE UNSATISFACTORY, THEN THE PIPING SHALL BE DISINFECTED UNTIL A SUFFICIENT NUMBER OF SATISFACTORY SAMPLES ARE OBTAINED.

2.

THE CONTRACTOR SHALL FURNISH ALL EQUIPMENT AND MATERIALS AND PERFORM THE WORK NECESSARY FOR THE DISINFECTING PROCEDURES, INCLUDING ADDITIONAL DISINFECTION AS REQUIRED.

3.

CONTRACTOR SHALL PROVIDE THE CITY WITH 48 HOURS ADVANCED NOTICE OF DISINFECTION.

7.13.6.

AS-BUILT RECORD DRAWINGS. THE DEVELOPER MUST PROVIDE ONE COMPLETE SET OF MYLARS AND FOUR COMPLETE SETS OF WHITE COPY PRINTS OF "AS-BUILT RECORD DRAWINGS" OF THE PROJECT, SHOWING ACCURATE MEASUREMENTS OF WATER AND SEWER LINES AND STRUCTURES FROM FIXED KNOWN LOCATIONS WITHIN THE DEVELOPMENT. THE AS-BUILT RECORD DRAWINGS SHALL BE SIGNED AND SEALED BY THE PROJECT DESIGN ENGINEER ATTESTING TO THE ACCURACY OF THE LOCATIONS OF THE FACILITIES. THE AS-BUILT RECORD DRAWINGS ARE TO BE PROVIDED BEFORE THE CITY CAN ACCEPT THE IMPROVEMENTS.

POTABLE WATER GENERAL NOTES | PW001-1I | ISSUED: 2017 | REVISED: --

PW002-1

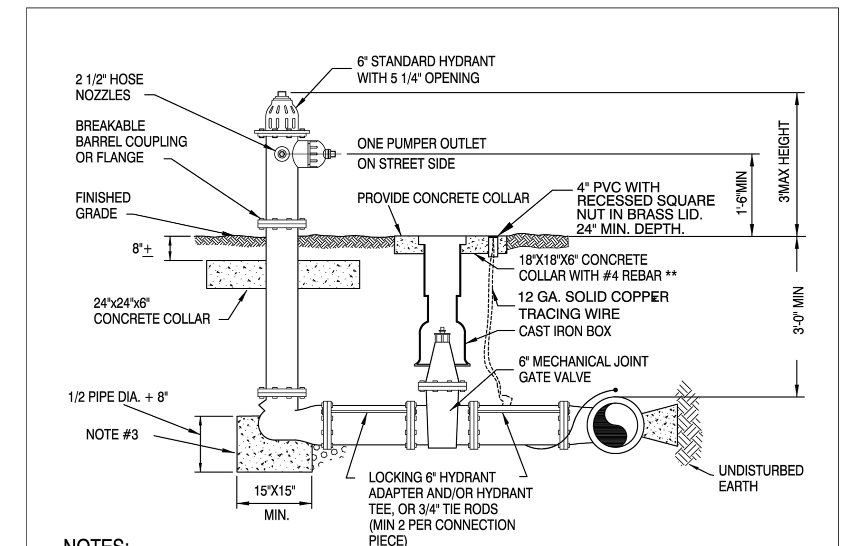

NOTES:

1. THE HYDRANTS ACCEPTABLE TO THE CITY OF MT. DORA SHALL BE EITHER AMERICAN DARLING B84B, MUELLER A-423, OR CLOW MEDALLION.
2. CONCRETE COLLAR AROUND LOWER BARREL OF HYDRANT IN SANDY SOIL OR HYDRANTS CONNECTED TO P.V.C. MAINS.
3. HYDRANT BASE AND TEE MUST BE WRAPPED IN 4 MIL POLYETHYLENE. NO CONCRETE WILL EXTEND ABOVE MID LINE OF PIPE
4. WEEP HOLES TO BE PLUGGED.
5. A VERTICAL CLEARANCE OF 1'-6" SHALL BE MAINTAINED FOR A HORIZONTAL DISTANCE OF 4 FEET IN ALL DIRECTIONS AROUND ALL HYDRANTS.
6. PRIVATELY-OWNED WATER SYSTEM HYDRANTS SHALL BE MAINTAINED BY OWNERS.
7. ANNUAL MAINTENANCE RECORDS FOR PRIVATE HYDRANTS SHALL BE SUBMITTED TO CITY FIRE DEPARTMENT.

* COIL EXCESS TRACING WIRE IN PVC TUBE FOR LOCATING.

** A 16" DIAMETER X 6" THICK CIRCULAR COLLAR MAY BE SUBSTITUTED FOR THE 18"X18"X6" COLLAR.

STANDARD FIRE HYDRANT ASSEMBLY | PW002-1 | ISSUED: 2017 | REVISED: --

PW010-1

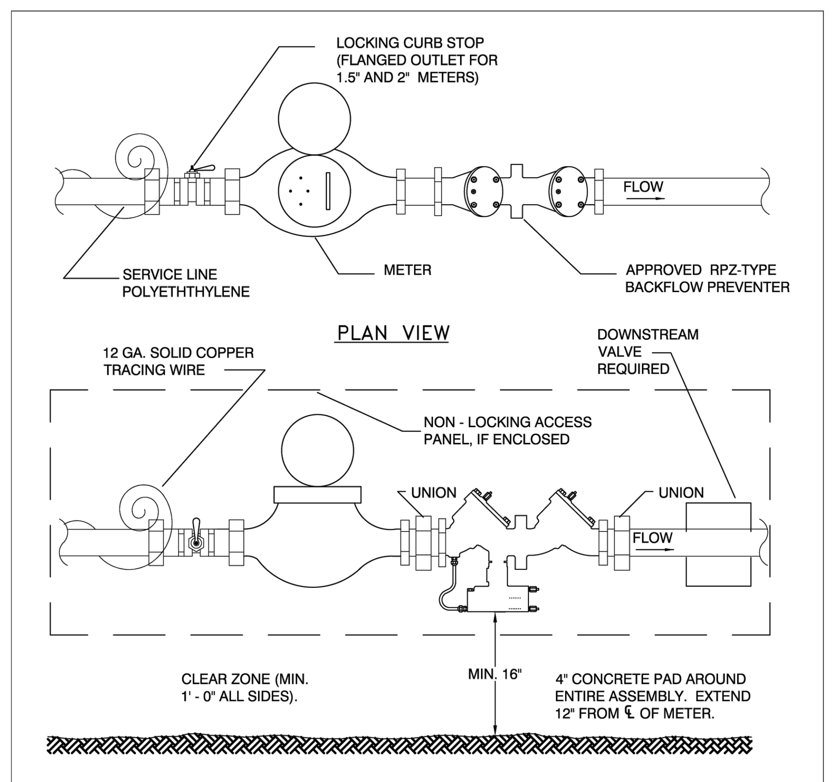

NOTES:

1. ALL METERS UP TO AND INCLUDING 2" SHALL BE NEPTUNE MODEL T10 INSTALLED BY THE CITY.
2. LOCATION SHALL BE COORDINATED WITH UTILITY BILLING & PUBLIC SERVICES DEPARTMENT.
3. SERVICE LINES SHALL NOT BE LESS THAN METER SIZE.
4. BOLLARDS MAY BE REQUIRED IN TRAFFIC AREAS OR LOCATIONS IMMEDIATELY ADJACENT TO TRAFFIC AREAS.
5. PROVIDE PIPE SUPPORTS WHERE NEEDED.

POTABLE WATER INDIVIDUAL ABOVE GROUND METER SET | PW010-1 | ISSUED: 2017 | REVISED: --

PW0013-1

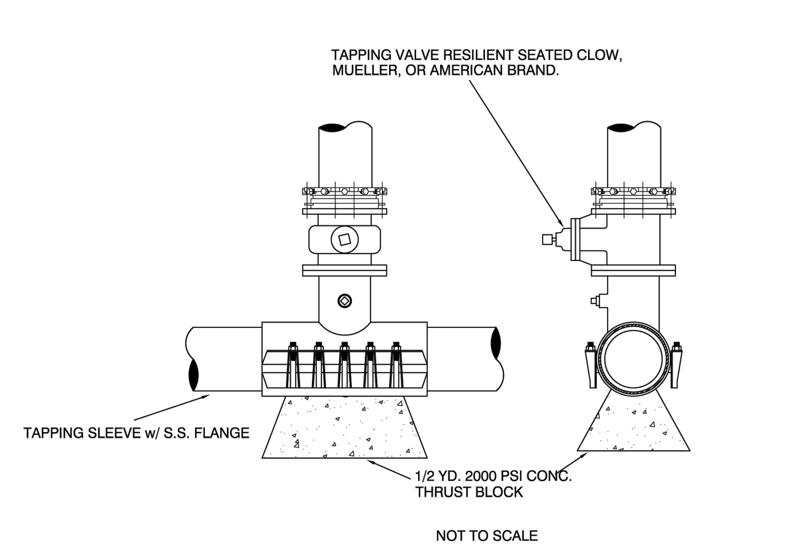

WET TAP SLEEVE & VALVE | PW0013-1 | ISSUED: 2017 | REVISED: --

PW003-1

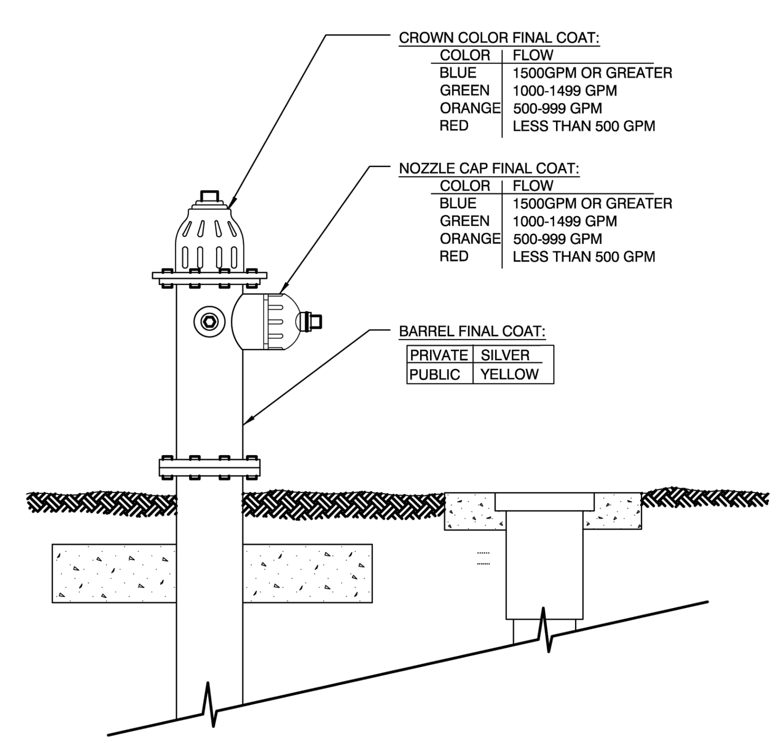

NOTE:

1. PAINT SHALL BE PORTER PAINTS (SAFETY) DTM ACRYLIC GLOSS ENAMEL #2912 OR EQUAL.

FIRE HYDRANT COLOR IDENTIFICATION | PW003-1 | ISSUED: 2017 | REVISED: JAN 2020

PW0012-1

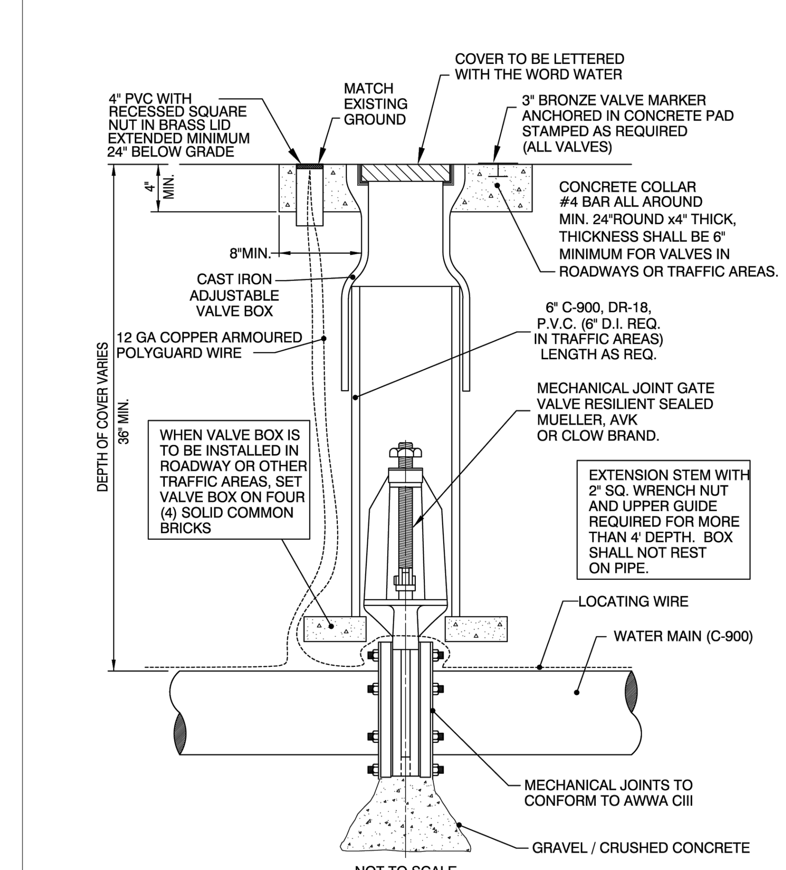

GATE VALVE & BOX | PW0012-1 | ISSUED: 2017 | REVISED: --

GU0016-1

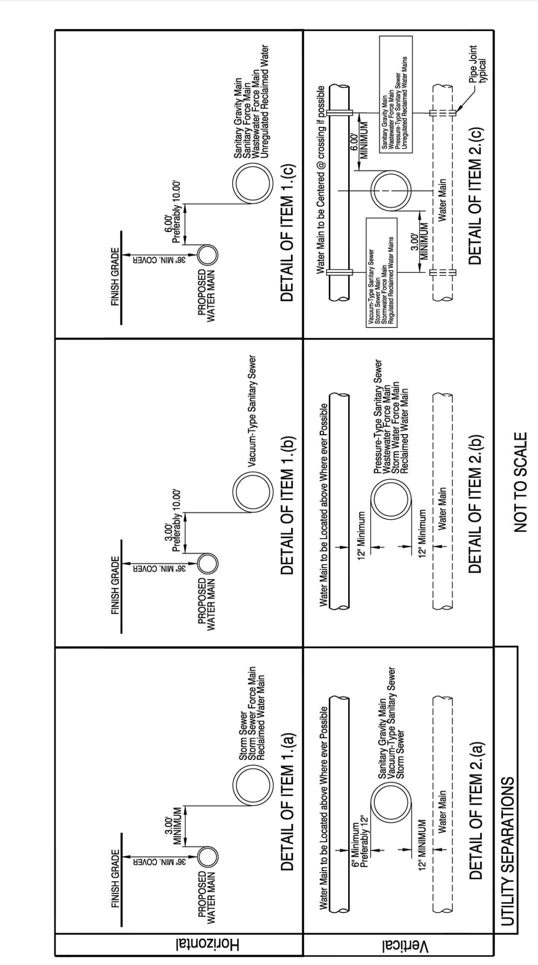

NOT TO SCALE

PIPE CLEARANCE | GU0016-1 | ISSUED: 2017 | REVISED: --

NO.	DATE	DESCRIPTION
1	11/21/2024	REVISED PER SJRWMD & CITY OF MOUNT DORA COMMENTS

REVISION BLOCK

SANTOS MEDINA, III, P.E.
STATE OF FLORIDA
PROFESSIONAL ENGINEER
LICENSE NO. 74539

11/21/2024

This item has been digitally signed and sealed by the engineer on the date indicated hereon. Printed copies of this document are not considered signed and sealed. Signature must be verified on any electronic copies.

NOT VALID UNLESS PHYSICALLY, DIGITALLY, OR ELECTRONICALLY SIGNED AND SEALED

DESIGNED BY: SM | DRAWN BY: DH | CHECKED BY: SM

SLOAN Engineering Group
150 SOUTH WOODLAWN AVENUE, BARTOW, FL 33830
PHONE: (863) 800-3046 - FAX: (863) 800-1159
FLORIDA CERTIFICATE OF AUTHORIZATION (FLCA) #26247

CLIENT: EUDORA ROAD, LLC

PROJECT: FREDDY'S FROZEN CUSTARD - MOUNT DORA

CITY DETAILS

2495 EUDORA RD, MT DORA, FLORIDA 32757

PROJECT NO.: 2575 | SHEET: C704

X:\Engineering\2575-FFC of Central Florida-Freddy's Frozen Custard-Mt Dora\cad\2575 Base.dwg, C704-City Details, 11/21/2024 8:53:57 AM, dharper, 1:1

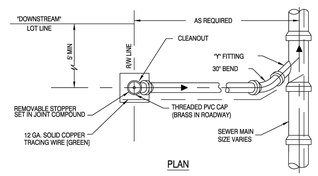

PLAN

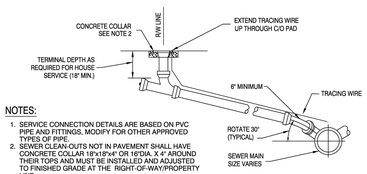

PROFILE

NOTES:

1. SERVICE CONNECTION DETAILS ARE BASED ON PVC PIPE AND FITTINGS, MODIFY FOR OTHER APPROVED TYPES OF PIPE.
2. SEWER CLEAN-OUTS NOT IN PAVEMENT SHALL HAVE CONCRETE COLLAR 18"x18"x4" OR 16"DIA. X 4" AROUND THEIR TOPS AND MUST BE INSTALLED AND ADJUSTED TO FINISHED GRADE AT THE RIGHT-OF-WAY/PROPERTY LINE.
3. ALL PVC TO CLAY SERVICE CONNECTIONS UNDER LOAD BEARING SURFACES SHALL USE DFW NON-SHEAR FERNCO TYPE CONNECTORS OR APPROVED EQUAL.
4. 90° FITTINGS ARE PROHIBITED. MINIUMUM 6" SPOOL BETWEEN 45° FITTINGS.
5. DOUBLE SERVICE CONNECTIONS ARE PERMITTED, MINIMUM 6" PIPE REQUIRED.
6. CLEANOUTS IN SIDEWALKS SHALL BE HOUSED IN METER BOX.

TYPICAL SEWER CONNECTION

SS001-1
ISSUED: 2017
REVISED: --

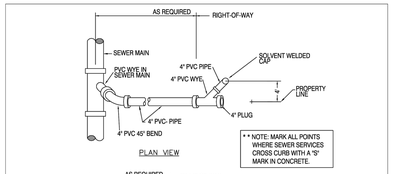

PLAN VIEW

* * NOTE: MARK ALL POINTS WHERE SEWER SERVICES CROSS CURB WITH A "S" MARK IN CONCRETE.

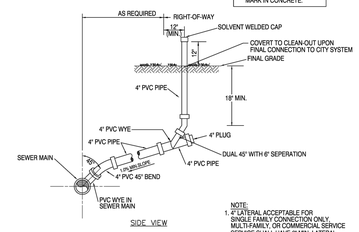

SIDE VIEW

PVC SINGLE SERVICE
NOT TO SCALE

NOTE:
1. 4" LATERAL ACCEPTABLE FOR SINGLE FAMILY CONNECTION ONLY. MULTI-FAMILY, OR COMMERCIAL SERVICE SERVICE SHALL HAVE 6" MIN. LATERAL.
2. IN BACKLOT EASEMENTS, CONCRETE COLLAR WITH REBAR REQUIRED, SINGLE & DOUBLE.

SINGLE SANITARY SEWER SERVICE

SS012-1
ISSUED: 2017
REVISED: --

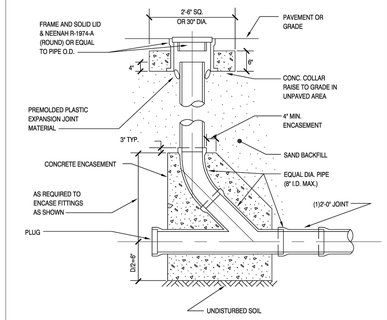

NOT TO SCALE

GRAVITY CLEANOUT

SS014-1
ISSUED: 2017
REVISED: --

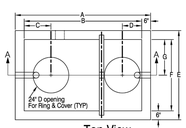

Top View

NOTES:

1. Volume to be approved by City Engineer or designee.

2. Structural design must be performed by the manufacturer with shop drawings provided to City Engineer for approval and must provide H-20 loading per AASHTO.

3. Top of manhole must be minimum of six inches below the lowest finished floor with positive drainage away from the building.

4. The three inch vent must tie back to the building vent and must be installed per the Florida Building Code, latest edition.

5. The slope of the influent and effluent laterals must comply with the Florida Building Code, Latest Edition.

6. Only kitchen waste shall be discharged to the grease interceptor. All domestic waste shall be connected downstream of the grease interceptor.

7. All tank volumes in excess of 1600 gallons shall include a 500 gallon grease polishing tank installed between the grease interceptor and the downstream inspection sampling station. The volume of the polishing tank shall be included in the overall required volume.

8. All pipes and fittings shall comply with ASTM 2665.

9. Inspection/Sampling Station required for all grease traps (indoor) and grease interceptor/s (outdoor).

10. Inspection/Sampling Station can be used in lieu of a sanitary clean out if located within five feet of the building when grease traps are utilized.

11. All concrete shall be minimum fc=4500 psi and all steel shall be minimum fy=60 ksi.

12. Alternative designs must be approved by the City Engineer.

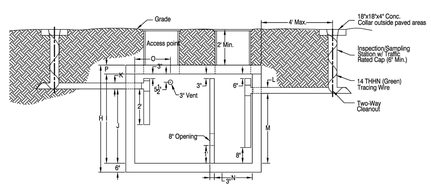

Section View A-A

Grease Interceptor Dimensions 750 To 3,500 Gallons

Tank Size(Gal.)	A	B	C	D	E	F	G	H
750	7'-6"	6'-6"	1'-6"	1'-0"	5'-0"	4'-0"	2'-0"	6'-0"
1000	9'-0"	8'-0"	1'-6"	1'-6"	5'-0"	4'-0"	2'-0"	7'-4"
1250	9'-0"	8'-0"	1'-6"	1'-6"	5'-0"	4'-0"	2'-0"	7'-4"
1600	11'-6"	10'-6"	1'-6"	1'-6"	5'-0"	4'-0"	2'-0"	7'-4"
2000	11'-6"	10'-6"	1'-6"	1'-6"	6'-0"	5'-0"	2'-6"	7'-0"
2500	11'-6"	10'-6"	1'-6"	1'-6"	6'-0"	5'-0"	2'-6"	8'-4"
3000	13'-0"	12'-0"	1'-6"	1'-6"	7'-0"	6'-0"	3'-0"	9'-1"
3500	13'-0"	12'-0"	1'-6"	1'-6"	7'-0"	6'-0"	3'-0"	9'-1"

Grease Interceptor Dimensions 750 To 3,500 Gallons

Tank Size(Gal.)	I	J	K	L	M	N	O	P
750	5'-0"	4'-2"	0'-4"	0'-4"	3'-11"	2'-0 1/2"	2'-0"	0'-6"
1000	6'-4"	4'-5"	0'-4"	0'-4"	4'-2"	2'-10 1/2"	3'-6"	0'-6"
1250	6'-4"	5'-6"	0'-4"	0'-4"	5'-3"	2'-10 1/2"	3'-6"	0'-6"
1600	6'-0"	4'-4"	0'-4"	0'-4"	4'-1"	3'-4 1/2"	3'-6"	0'-6"
2000	6'-0"	5'-4"	0'-4"	0'-4"	5'-1"	3'-4 1/2"	3'-6"	0'-6"
2500	7'-4"	6'-7"	0'-4"	0'-4"	6'-4"	3'-4 1/2"	3'-6"	0'-6"
3000	8'-0"	5'-6 1/2"	0'-4"	0'-4"	5'-3 1/2"	3'-10 1/2"	3'-6"	0'-7"
3500	8'-0"	6'-9"	0'-4"	0'-4"	6'-6"	3'-10 1/2"	3'-6"	0'-7"

GREASE INTERCEPTOR- 750 TO 3,500 GALLONS

SS004-2A
ISSUED: 2017
REVISED: --

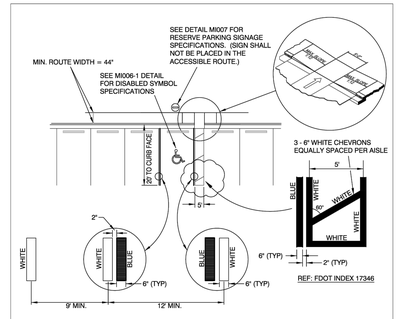

NOTES:

1. EACH ACCESSIBLE PARKING SPACE SHALL BE CONSPICUOUSLY STRIPED IN BLUE PAINT, AND SHALL BE POSTED AND MAINTAINED WITH A PERMANENT, ABOVE-GRADE SIGN BEARING THE INTERNATIONAL SYMBOL OF ACCESSIBILITY AND THE CAPTION "PARKING BY DISABLED PERMIT ONLY" OR "VAN ACCESSIBLE" WHICH ADEQUATELY PENALIZES VEHICLE PARKED IN THE SPACE. ALL REQUIRED PARKING SPACES MUST BE SIGNED AND MARKED IN ACCORDANCE WITH THE STANDARDS ADOPTED BY THE DEPARTMENT OF TRANSPORTATION.
2. PARKING SPACE WIDTH AND ACCESS AISLES SHALL BE MEASURED FROM CENTER OF WHITE STRIPE TO CENTER OF WHITE STRIPE.
3. THIS DETAIL IS PROVIDED TO SUPPORT LDC SECTION 3.41.3.2
4. WHERE CURBING EXISTS PARALLEL TO STALL, BLUE LINE SHALL BE REQUIRED ADJACENT TO CURB (WHITE LINE WILL NOT BE REQUIRED).
5. CURB RAMPS CONSTRUCTED ON EXISTING SITES OR FACILITIES MAY HAVE SLOPES AND RISES AS ALLOWED IN ADA 4.1.6 (3) (a) IF SPACE LIMITATIONS PROHIBIT THE USE OF A 1:12 SLOPE OR LESS.

ACCESSIBLE PARKING - SINGLE SPACE STRIPING

GU0024-1
ISSUED: 2017
REVISED: --

NO.	DATE	DESCRIPTION
1	11/21/2024	REVISED PER SJRWMD & CITY OF MOUNT DORA COMMENTS

REVISION BLOCK

SANTOS MEDINA, III, P.E.
SINGLE LICENSE
PROFESSIONAL ENGINEER
LICENSE NO. 74339
STATE OF FLORIDA

11/21/2024

This item has been digitally signed and sealed by Santos Medina, III, P.E. on the date adjacent to the seal. Printed copies of this document are not considered signed and sealed and the SHA authentication code must be verified on any electronic copies.
NOT VALID WITHOUT THE SIGNATURE AND ORIGINAL RAISED SEAL OF A FLORIDA LICENSED PROFESSIONAL ENGINEER

DESIGNED BY:	DRAWN BY:	CHECKED BY:
SM	DH	SM

SLOAN Engineering Group
150 SOUTH WOODLAWN AVENUE, BARTOW, FL 33830
PHONE: (863) 800-3046 - FAX: (863) 800-1159
FLORIDA CERTIFICATE OF AUTHORIZATION (FLCA) #26247

CLIENT: EUDORA ROAD, LLC

PROJECT: FREDDY'S FROZEN CUSTARD - MOUNT DORA

CITY DETAILS

2495 EUDORA RD., MT DORA, FLORIDA 32757

PROJECT NO.	SHEET
2575	C705

X:\Engineering\2575-FFC of Central Florida-Freddy's Frozen Custard-Mt Dora\cad\2575 Base.dwg, C705-City Details, 11/21/2024 8:54:14 AM, dharper, 1:1

CODE LANDSCAPE PLANS
FOR

FREDDY'S STEAKBURGERS

MOUNT DORA, FLORIDA
JUNE 2024

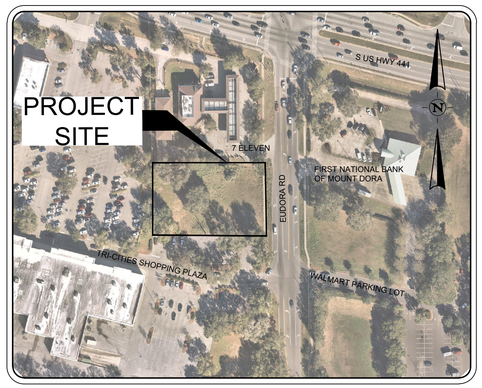

PROJECT MAP
NOT TO SCALE

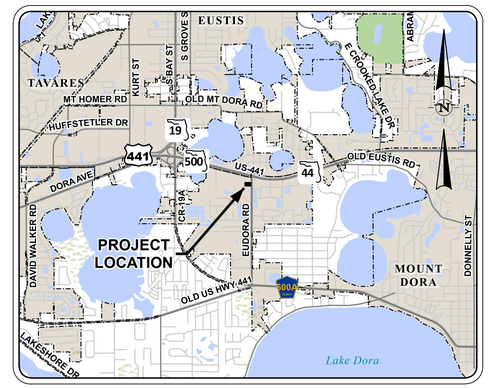

LOCATION MAP
NOT TO SCALE

INDEX OF LANDSCAPE PLANS

SHEET NO.	SHEET DESCRIPTION
L000	COVER SHEET
LM100	TREE MITIGATION PLAN
LP100	LANDSCAPE PLAN
LP500	LANDSCAPE DETAILS
LP501	LANDSCAPE NOTES
LI100	IRRIGATION PLAN
LI500	IRRIGATION DETAILS
LI501	IRRIGATION NOTES

OWNER/CLIENT:

FFC OF CENTRAL FLORIDA

TAVERES, FLORIDA
TEL. 631-944-2126
BWHITE@FLCUSTARD.COM

PREPARED BY:

halff

1000 N. ASHLEY DRIVE
SUITE 900 TAMPA FLORIDA USA 33602
TEL. 813-620-4500 FAX 813-620-4980
www.halff.com

11/19/2024

THIS ITEM HAS BEEN DIGITALLY SIGNED AND SEALED BY LAURA M. DUPLAIN, PLA
LICENSE # 6667408
ON THE DATE ADJACENT TO THE SEAL.

PRINTED COPIES OF THIS DOCUMENT ARE NOT CONSIDERED SIGNED AND SEALED AND THE SIGNATURE MUST BE VERIFIED ON ANY ELECTRONIC COPIES.

Know what's below. Call before you dig.

THE INFORMATION SHOWN ON THESE DRAWINGS INDICATING SIZE, TYPE AND LOCATION OF UNDERGROUND, SURFACE, AND AERIAL UTILITIES IS NOT GUARANTEED TO BE EXACT OR COMPLETE. THE CONTRACTOR SHALL CONTACT THE "SUNSHINE 811" SYSTEM AT 1-800-432-4770 48 HOURS PRIOR TO BEGINNING ANY EXCAVATION FOR EXISTING UTILITY LOCATIONS. THE CONTRACTOR SHALL ALSO BE FULLY RESPONSIBLE FOR FIELD VERIFYING LOCATIONS AND ELEVATIONS OF ALL EXISTING UTILITIES AFFECTED BY CONSTRUCTION FOR THIS PROJECT IN ORDER TO AVOID DAMAGING THOSE UTILITIES, AND SHALL IMMEDIATELY ARRANGE FOR REPAIR AND RESTORATION OF CONTRACTOR-DAMAGED UTILITIES TO THE UTILITY COMPANY'S APPROVAL AT THE EXPENSE OF THE CONTRACTOR.

FILE NAME: A:\57000s\57565\001\LA\CADD\L-COVER-LAND-57565.001.dwg DATE: November 19, 2024, TIME: 8:58 AM, USER: ah5043

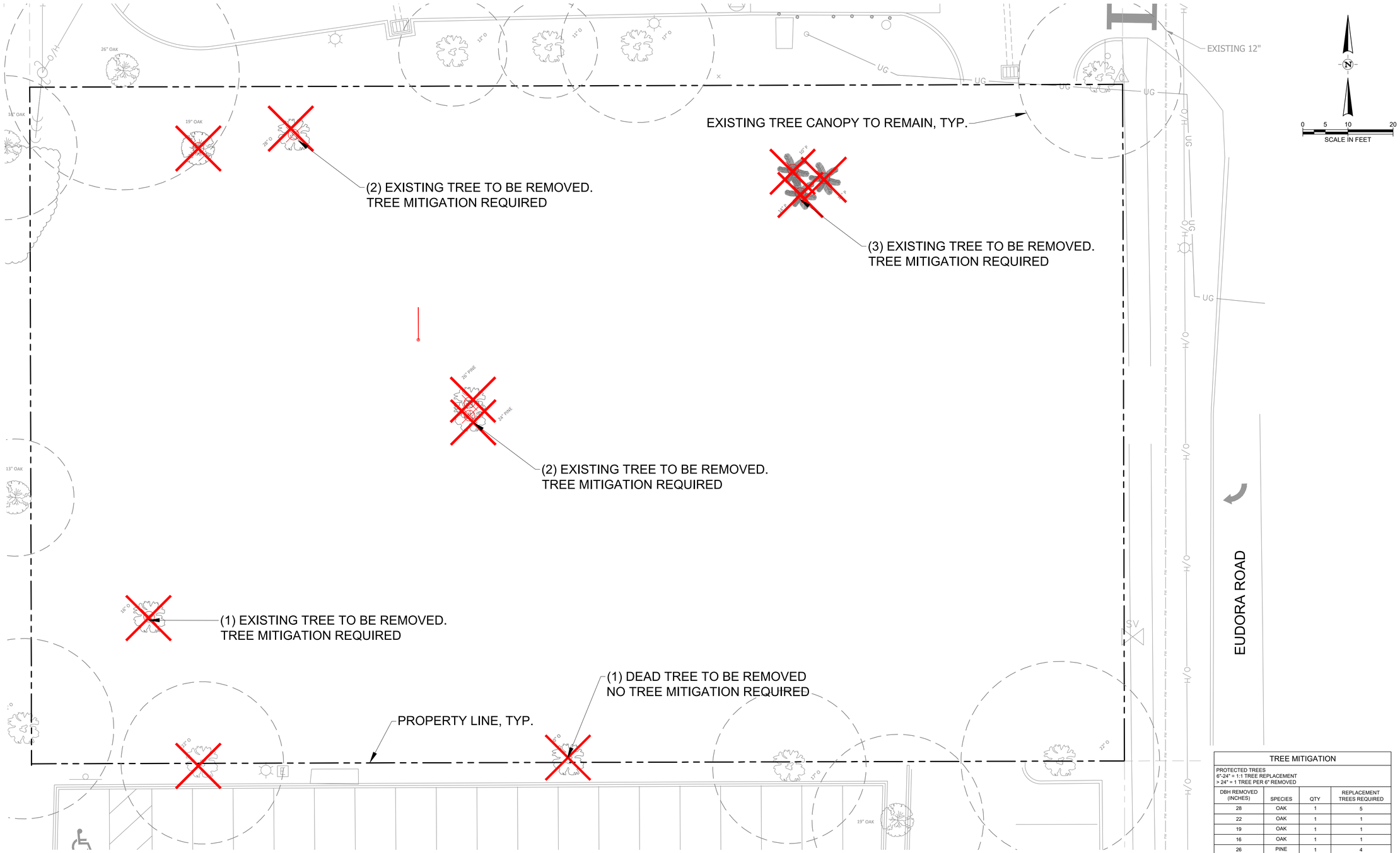

TREE MITIGATION

PROTECTED TREES
6"-24" = 1:1 TREE REPLACEMENT
> 24" = 1 TREE PER 6" REMOVED

DBH REMOVED (INCHES)	SPECIES	QTY	REPLACEMENT TREES REQUIRED
28	OAK	1	5
22	OAK	1	1
19	OAK	1	1
16	OAK	1	1
26	PINE	1	4
24	PINE	1	4
14	PALM	1	1
12	PALM	1	1
10	PALM	1	1
TOTAL REPLACEMENT TREES REQUIRED:			19
REPLACEMENT TREES PROVIDED ON SITE: (REFER TO SHEET LP501 FOR PLANTING SCHEDULE) (13) SLASH PINE (6) LIVE OAK			19

FREDDY'S STEAKBURGERS
MOUNT DORA, FLORIDA

FFC OF CENTRAL FLORIDA

halff
1000 N. ASHLEY DR., SUITE 900
TAMPA, FLORIDA 33602
TEL: (813) 620-4500

REVISION		
NO.	DATE	DESCRIPTION

THE SEAL ORIGINALLY APPEARING ON THIS DOCUMENT WAS AUTHORIZED BY:

LAURA M. DUPLAIN 6667408
NAME PLA LICENSE NO.
11/19/2024
DATE

THE RECORD COPY OF THIS DRAWING IS ON FILE AT THE OFFICES OF:

HALFF ASSOCIATES, INC.

CA 3380 & LC 26000645 FL
FIRM OR BUSINESS NO. STATE

PROJECT NO.: 57565.001
ISSUED: JUNE 2024
DRAWN BY: SG
CHECKED BY: LMD
SCALE: 1" = 10'
SHEET TITLE: TREE MITIGATION PLAN

LM100

FILE NAME: A:\57000s\57565\001\LA\CAD\DL-PLAN-MIT- 57565.001.dwg DATE: November 19, 2024, TIME: 8:59 AM, USER: ah5043

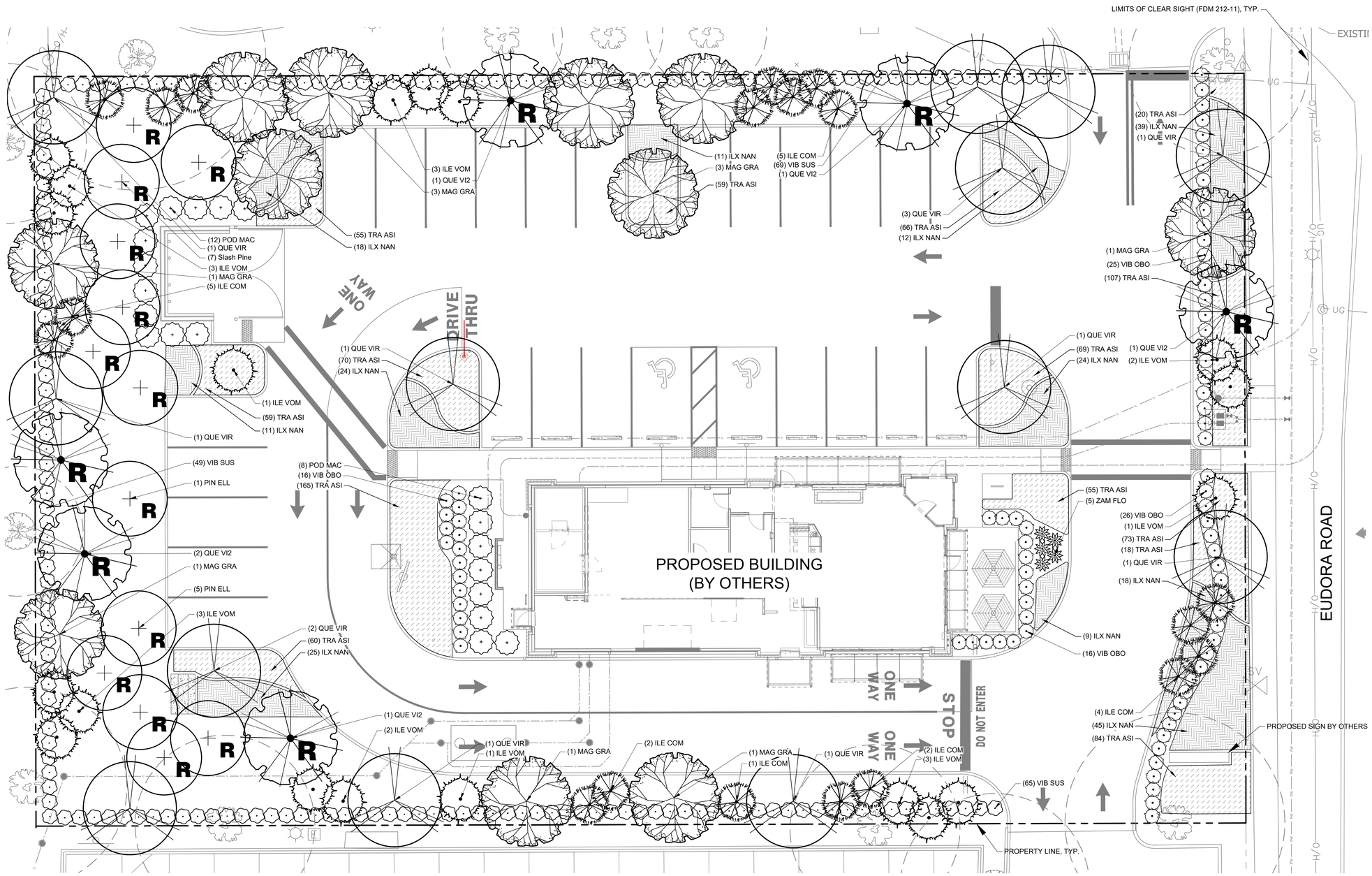

CITY OF MOUNT DORA LANDSCAPE CALCULATIONS

INTERNAL LANDSCAPE AREA REQUIREMENT: (SEC.6.6.3)

TOTAL VEHICLE USE AREA =	28,804 SF
10% INTERNAL LANDSCAPE AREA REQUIRED =	2,880 SF
INTERNAL LANDSCAPE AREA PROVIDED =	3,014 SF

LANDSCAPE BUFFERS (SEC. 6.6.2)

BUFFER TYPE A: 3 CANOPY TREES PER 100'
5 UNDERSTORY TREES PER 100'
CONTINUOUS SHRUB

NORTH BUFFER REQUIRED: 219 LF
(219 X 3)/100 = 7 CANOPY TREES
(219 X 5)/100 = 11 UNDERSTORY TREES

NORTH BUFFER PROVIDED: 10' WIDTH
7 CANOPY TREES
11 UNDERSTORY TREES

EAST BUFFER REQUIRED: 144 LF
(144 X 3)/100 = 4 CANOPY TREES
(144 X 5)/100 = 7 UNDERSTORY TREES

EAST BUFFER PROVIDED: 10' WIDTH
3 CANOPY TREES (1 EXISTING)
7 UNDERSTORY TREES

SOUTH BUFFER REQUIRED: 219 LF
(219 X 3)/100 = 7 CANOPY TREES
(219 X 5)/100 = 11 UNDERSTORY TREES

SOUTH BUFFER PROVIDED: 10' WIDTH
8 CANOPY TREES (2 EXISTING)
11 UNDERSTORY TREES

WEST BUFFER REQUIRED: 150 LF
(150 X 3)/100 = 5 CANOPY TREES
(150 X 5)/100 = 8 UNDERSTORY TREES

WEST BUFFER PROVIDED: 10' WIDTH
5 CANOPY TREES
8 UNDERSTORY TREES

SODDING NOTE

ALL DISTURBED AREAS SHALL BE SODDED, SEE GENERAL LANDSCAPE NOTE #3 ON SHEET LP501
PROPOSED SOD SHALL BE BAHIA SOD.

PLANT LEGEND (SEE SHEET LP501 FOR SCHEDULE)

Trees

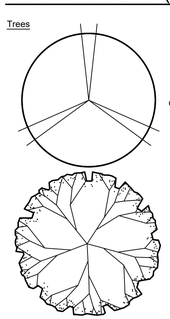

Ilex cassine / Dahoon Holly

Quercus virginiana / Southern Live Oak

Ilex vomitoria / Yaupon Holly

Magnolia grandiflora / Southern Magnolia

Replacement Trees

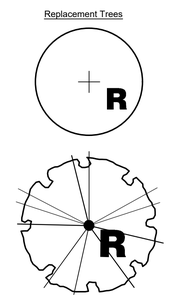

Pinus elliottii / Slash Pine

Quercus virginiana / Southern Live Oak

Shrubs

Podocarpus macrophyllus / Yew Podocarpus

Viburnum obovatum / Walter's Viburnum

Viburnum suspensum / Sandankwa Viburnum

Zamia floridana / Florida Coontie

Shrub Area

Ilex vomitoria 'Nana' / Dwarf Yaupon Holly

Groundcover

Trachelospermum asiaticum / Asiatic Jasmine

FREDDY'S STEAKBURGERS
MOUNT DORA, FLORIDA

FFC OF CENTRAL FLORIDA

halff
1000 N. ASHLEY DR., SUITE 900
TAMPA, FLORIDA 33602
TEL: (813) 620-4500

REVISION		
NO.	DATE	DESCRIPTION

THE SEAL ORIGINALLY APPEARING ON THIS DOCUMENT WAS AUTHORIZED BY:

LAURA M. DUPLAIN — 6667408
NAME — PLA LICENSE NO.

11/19/2024
DATE

THE RECORD COPY OF THIS DRAWING IS ON FILE AT THE OFFICES OF:

HALFF ASSOCIATES, INC.

CA 3380 & LC 26000645 — FL
FIRM OR BUSINESS NO. — STATE

PROJECT NO.:	57565.001
ISSUED:	JUNE 2024
DRAWN BY:	SG
CHECKED BY:	LMD
SCALE:	1" = 10'
SHEET TITLE:	LANDSCAPE PLAN

LP100

FILE NAME: A:\57000s\57565\001\LA\CADD\L-PLAN-LAND- 57565.001.dwg DATE: November 19, 2024, TIME: 9:00 AM, USER: ah5043

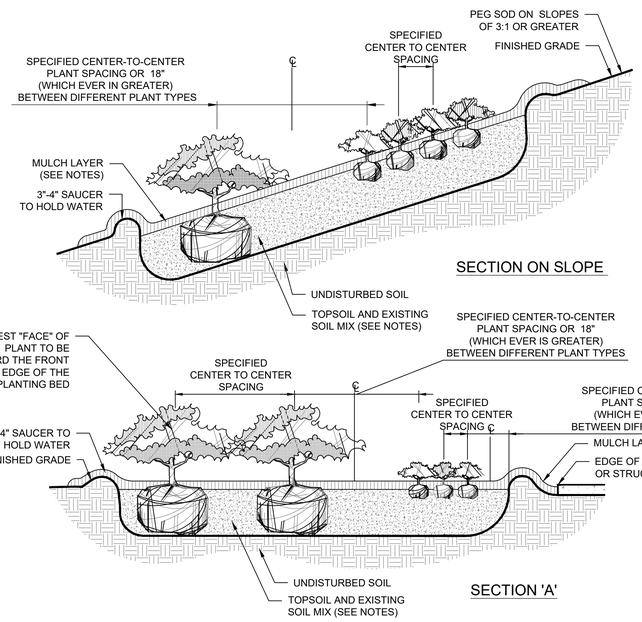

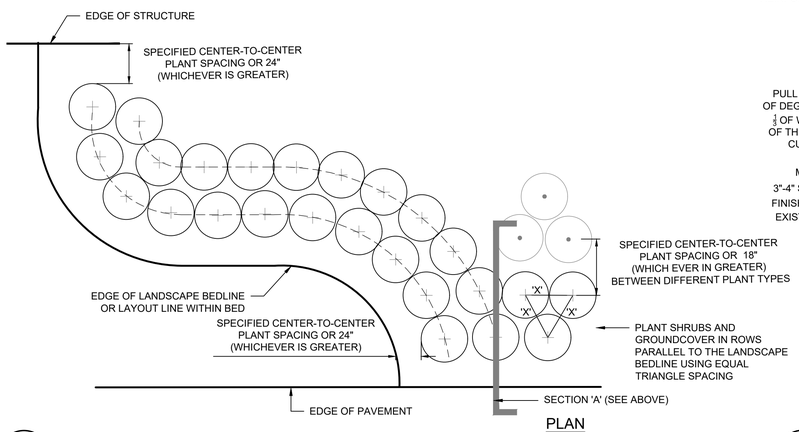

1 TYPICAL SHRUB AND GROUNDSCOVER INSTALLATION

SCALE: NTS

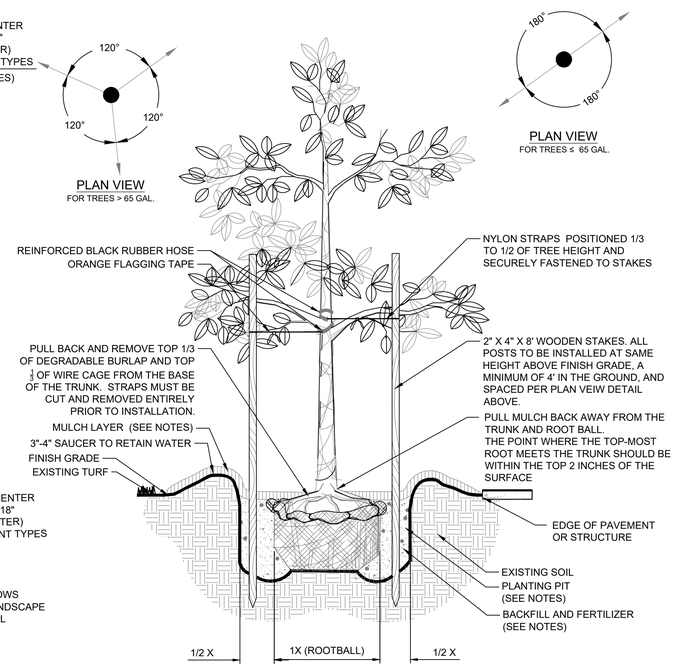

2 TYPICAL TREE INSTALLATION

SCALE: NTS

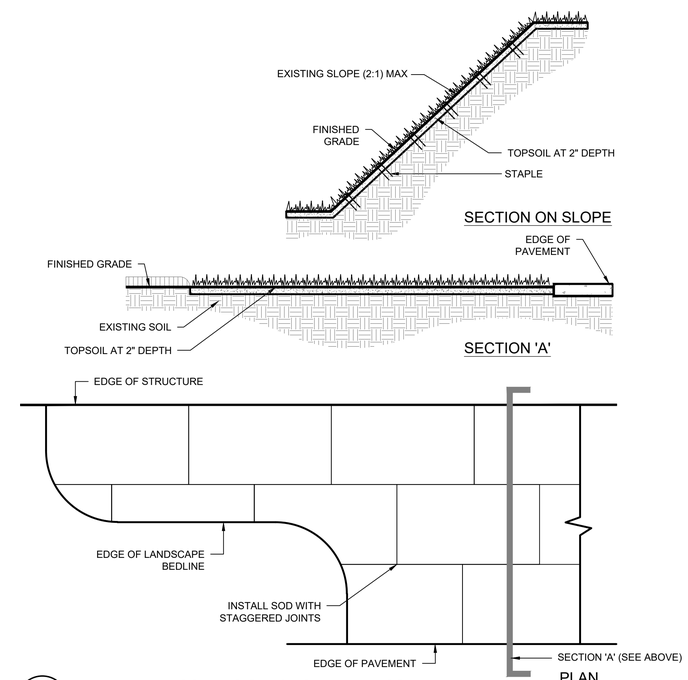

3 TYPICAL SOD INSTALLATION

SCALE: NTS

FREDDY'S STEAKBURGERS
MOUNT DORA, FLORIDA

FFC OF CENTRAL FLORIDA

halff
1000 N. ASHLEY DR., SUITE 900
TAMPA, FLORIDA 33602
TEL: (813) 620-4500

REVISION		
NO.	DATE	DESCRIPTION

THE SEAL ORIGINALLY APPEARING ON THIS DOCUMENT WAS AUTHORIZED BY:

LAURA M. DUPLAIN — 6667408
NAME — PLA LICENSE NO.

11/19/2024
DATE

THE RECORD COPY OF THIS DRAWING IS ON FILE AT THE OFFICES OF:

HALFF ASSOCIATES, INC.

CA 3380 & LC 26000645 — FL
FIRM OR BUSINESS NO. — STATE

PROJECT NO.:	57565.001
ISSUED:	JUNE 2024
DRAWN BY:	SG
CHECKED BY:	LMD
SCALE:	N.T.S.
SHEET TITLE:	LANDSCAPE DETAILS

LP500

FILE NAME: A:\57000s\57565\001\LA\CADD\L-PLAN-LAND- 57565.001.dwg DATE: November 19, 2024, TIME: 9:00 AM, USER: ah5043

GENERAL LANDSCAPE NOTES:

1. LANDSCAPE CONTRACTOR IS RESPONSIBLE FOR VERIFYING PROJECT SITE CONDITIONS AND DETERMINING REQUIRED QUANTITIES AND AVAILABILITY OF ALL MATERIALS PRIOR TO BIDDING. QUANTITIES ARE PROVIDED FOR INFORMATIONAL PURPOSES ONLY. IF ANY DISCREPANCIES OCCUR BETWEEN QUANTITIES CALLED FOR ON THE PLANT LIST AND THOSE INDICATED ON THE DRAWINGS, THE DRAWINGS SHALL GOVERN.
2. PRIOR TO COMMENCEMENT OF CONSTRUCTION, CONTRACTOR SHALL INSPECT PLANTING AREAS AND VERIFY THAT NO OBJECTIONABLE MATERIALS OR OBSTRUCTIONS ARE PRESENT. PRESENT FINDINGS TO OWNER'S REPRESENTATIVE FOR APPROVAL. ALL EXISTING PLANTING SHALL REMAIN INTACT AND UNDISTURBED UNLESS OTHERWISE NOTED ON THE DRAWINGS. ALL EXISTING SITE FURNISHINGS, PAVING, LANDSCAPE, AND OTHER ELEMENTS TO REMAIN SHALL BE PROTECTED FROM ANY DAMAGE UNLESS OTHERWISE NOTED.
3. THE CONTRACTOR SHALL BE RESPONSIBLE FOR PROTECTING ADJACENT IMPROVEMENTS FROM DAMAGE AND EROSION INCLUDING BUT NOT LIMITED TO EXISTING PLANT MATERIAL, GRADES, SIDEWALKS, SITE FURNISHINGS, CURBS, AND UTILITIES. ANY ADJACENT IMPROVEMENT DAMAGED DURING CONSTRUCTION SHALL, AT A MINIMUM, BE RESTORED TO A STATE EQUAL TO ITS PRE-CONSTRUCTION STATE AT THE CONTRACTOR'S EXPENSE. THE LANDSCAPE CONTRACTOR IS RESPONSIBLE FOR SODDING ALL AREAS DISTURBED BY OTHER CONTRACTORS OR BY LANDSCAPE INSTALLATION.
4. IN GENERAL, THE WORK SHALL PROCEED AS RAPIDLY AS THE SITE BECOMES AVAILABLE. CONTRACTOR TO COORDINATE PROJECT SCHEDULE WITH OWNER'S REPRESENTATIVE. WORK TO BEGIN WITHIN 5 BUSINESS DAYS OF RECEIPT OF NOTICE TO PROCEED.
5. THE CONTRACTOR SHALL OBTAIN ALL NECESSARY PERMITS TO COMPLETE WORK, AND SHALL COMPLY WITH ALL LOCAL, STATE, AND FEDERAL REGULATIONS.
6. THE LANDSCAPE CONTRACTOR SHALL COORDINATE CONSTRUCTION OF PLANTING AREAS WITH HARDSCAPE, ELECTRICAL, AND IRRIGATION WORK.
7. LANDSCAPE CONTRACTOR SHALL BE RESPONSIBLE FOR PROVIDING ANY HOISTING EQUIPMENT NECESSARY FOR THE PLACEMENT OF PLANT MATERIAL.
8. COLLECT SOIL SAMPLES AT A MINIMUM OF (1) PLANTING LOCATIONS THROUGHOUT THE PROJECT. SUBMIT TESTING LOCATIONS TO OWNER'S REPRESENTATIVE PRIOR TO TAKING SAMPLES. SAMPLES SHALL BE SENT TO AN APPROVED AGRONOMIC SOILS TESTING LABORATORY, STATING PROPOSED PLANT MATERIAL AT EACH TEST LOCATION. ANALYSIS SHALL INCLUDE, AT A MINIMUM, PH, NPK, ORGANIC CONTENT, TEXTURE, AND SOLUBLE SALTS. SUBMIT RESULTS/RECOMMENDATIONS AND PROPOSED FERTILIZER ANALYSIS/AMENDMENTS TO OWNER'S REPRESENTATIVE. COSTS OF FERTILIZER AND AMENDMENTS ARE TO BE INCLUDED IN THE COST OF THE PROJECT.
9. LANDSCAPE CONTRACTOR SHALL BE RESPONSIBLE FOR LOCATING AND VERIFYING THE CONDITION OF UNDERGROUND UTILITIES THAT AFFECT PLANTING PROCEDURES. IF ANY CONFLICTS OCCUR BETWEEN PROPOSED LOCATION OF TREES ON THE DRAWINGS AND ANY UNDERGROUND, SUBSURFACE, OR OVERHEAD UTILITIES OR STRUCTURES THE LANDSCAPE CONTRACTOR SHALL NOTIFY THE OWNER'S REPRESENTATIVE. THE CONTRACTOR SHALL BE RESPONSIBLE FOR THE LOCATIONS AND PROTECTION OF ALL EXISTING UTILITIES SHOWN OR NOT SHOWN, AND ALL PROPOSED UTILITIES ON THESE DRAWINGS.
10. IF THE LANDSCAPE CONTRACTOR DAMAGES ANY STAKED OR IN PLACE UTILITIES OR STRUCTURES BY HIS OWN NEGLIGENCE THEY SHALL BE REPAIRED AT THE CONTRACTOR'S EXPENSE.
11. THE LANDSCAPE CONTRACTOR SHALL REFER TO THE LANDSCAPE PLANTING DETAILS, NOTES, AND THE LANDSCAPE SCHEDULE FOR COMPLETE LANDSCAPE INSTALLATION INSTRUCTIONS. NOTIFY OWNER'S REPRESENTATIVE OF ANY AND ALL DISCREPANCIES PRIOR TO CONSTRUCTION OR INSTALLATION.
12. THE LANDSCAPE CONTRACTOR SHALL RE-GRADE ALL AREAS DISTURBED BY PLANT REMOVAL, RELOCATION, AND/OR INSTALLATION WORK. ANY DAMAGED PLANT MATERIAL SHALL BE REPLACED WITH PLANTS OF SAME SPECIES (MIN 12' HT, 3" CAL, 6' CT) EQUALING THE TOTAL DIAMETER BREAST HEIGHT(DBH) OF THE DAMAGED TREE AND SHALL BE SUBJECT TO ALL REQUIREMENTS HEREIN.
13. THE LANDSCAPE CONTRACTOR SHALL BE RESPONSIBLE FOR WATERING ALL NEWLY INSTALLED PLANT MATERIAL AS NEEDED TO MAINTAIN HEALTH AND VIGOR THROUGHOUT THE 90 DAY MAINTENANCE PERIOD REGARDLESS OF THE STATUS OF EXISTING OR PROPOSED IRRIGATION AND/OR RAINFALL.

DAMAGES AND WARRANTY:

1. ALL PLANT MATERIAL, INCLUDING TRANSPLANTED PLANT MATERIAL, SHALL BE GUARANTEED AT OR ABOVE THE SPECIFIED CONDITIONS THROUGH SUBSTANTIAL COMPLETION AND UNTIL THE END OF THE (1) YEAR WARRANTY PERIOD. MAINTENANCE SHALL BE PROVIDED BY THE LANDSCAPE CONTRACTOR FOR 90 DAYS AFTER SUBSTANTIAL COMPLETION. AFTER WHICH THE LANDSCAPE CONTRACTOR WILL COORDINATE MAINTENANCE WITH OWNER'S REPRESENTATIVE. DECLINE IN CONDITION OF PLANT MATERIAL DURING INSTALLATION AND/OR WARRANTY PERIOD SHALL BE GROUNDS FOR REJECTION AND REPLACEMENT AT THE CONTRACTOR'S EXPENSE.
2. THE LANDSCAPE CONTRACTOR SHALL BE RESPONSIBLE FOR RE-STAKING OF TREES DURING THE WARRANTY PERIOD. IF NECESSARY, MAXIMUM TOLERANCE FROM VERTICAL SHALL BE 3 DEGREES. GUYING / STAKING PRACTICES SHALL NOT PERMIT NAILS, SCREWS, WIRES ETC., TO PENETRATE OUTER SURFACE OF TREES OR PALMS. TREES OR PALMS REJECTED DUE TO THIS PRACTICE SHALL BE REPLACED AT THE CONTRACTOR'S EXPENSE.
3. THE OWNER AND/OR THE OWNER'S REPRESENTATIVE HAS THE RIGHT TO REJECT ANY AND ALL WORK WHICH DOES NOT MEET WITH THE REQUIREMENTS OF THE SPECIFICATIONS AT ANY STAGE OF THE PROJECT. CONTRACTOR TO REPLACE REJECTED PLANT MATERIAL WITHIN ONE WEEK (5 BUSINESS DAYS) OF NOTICE.
4. CONTRACTOR TO REQUEST INSPECTION OF PROJECT IN WRITING TO OWNERS REPRESENTATIVE. IF ALL WORK IS SATISFACTORY AND COMPLETE IN ACCORDANCE WITH CONDITIONS OF CONTRACT DOCUMENTS, THEN THE OWNER AND/OR THEIR REPRESENTATIVE SHALL DECLARE THE PROJECT TO BE SUBSTANTIALLY COMPLETE. SUBSTANTIAL COMPLETION CONSTITUTES THE BEGINNING OF THE 1 YEAR WARRANTY PERIOD AND THE 90 DAY MAINTENANCE PERIOD.
5. CONTRACTOR SHALL REMOVE ALL PLANT SAUCERS, GRADE SMOOTH, AND RE-MULCH AS WELL AS REMOVE PLANTING STAKES FROM SITE AFTER THE (1) YEAR WARRANTY PERIOD.

PROJECT SUBMITTALS:

1. CONTRACTOR SHALL SUBMIT SHOP DRAWINGS FOR APPROVAL FOR ALL PROPOSED MATERIALS INCLUDING BUT NOT LIMITED TO PLANTS, STAKING, SOIL AMENDMENTS, FERTILIZER, MULCH, ETC. PRIOR TO PURCHASING. CONTRACTOR SHALL PROVIDE REPRESENTATIVE SAMPLES OF ALL PLANT MATERIAL ON-SITE FOR REVIEW BY OWNER'S REPRESENTATIVE; NOTIFY OWNER'S REPRESENTATIVE OF INSPECTION A MINIMUM OF 3 BUSINESS DAYS PRIOR TO INSPECTION. IF APPROVED BY OWNER'S REPRESENTATIVE, THEN DATED AND SCALED COLOR PHOTOGRAPHS MAY ALSO BE SUBMITTED.
2. ALL PROJECT SUBMITTALS MUST BE COMPLETED AND COMPILED IN AN EASILY REPRODUCIBLE FORM. SUBMITTAL SHEETS THAT ARE NOT LEGIBLE AND REPRODUCIBLE WILL BE REJECTED. SUBMITTALS SHEETS THAT DO NOT CLEARLY IDENTIFY THE PRODUCTS OR MATERIALS SELECTED WILL BE REJECTED.
3. CONTRACTOR SHALL SUBMIT TO THE OWNER'S REPRESENTATIVE THE GROWER'S AND/OR STATE INSPECTION CERTIFICATE FOR PLANT MATERIAL TWO (2) WEEKS PRIOR TO COMMENCEMENT OF WORK.
4. PRODUCTS INSTALLED ON THE PROJECT SITE THAT ARE NOT CONSISTENT WITH THE PROJECT SUBMITTALS WILL BE REMOVED AND REPLACED WITH THE PRODUCTS IDENTIFIED IN THE PROJECT SUBMITTAL PACKAGE AT THE CONTRACTORS EXPENSE.
5. PRIOR TO ISSUING SUBSTANTIAL COMPLETION NOTICE THE CONTRACTOR SHALL SUBMIT TO THE OWNER THREE (3) COPIES OF AS BUILT PLANS/DOCUMENTS AND THREE (3) COPIES OF AN ANNUALIZED MAINTENANCE AND OPERATION MANUAL DETAILING ALL SCHEDULES, NURSERY PRACTICES, WATERING REQUIREMENTS, FERTILIZATION, TRIMMING, ETC., FOR ALL PLANT MATERIALS AND PLANT AREAS OF THE PROJECT.

SITE REQUIREMENTS:

1. CONTRACTOR SHALL AGREE TO ASSUME SOLE AND COMPLETE RESPONSIBILITY FOR JOB SITE CONDITIONS DURING THE COURSE OF CONSTRUCTION OF THIS PROJECT, INCLUDING SAFETY OF ALL PERSONS AND PROPERTY, THAT THIS REQUIREMENT SHALL APPLY CONTINUOUSLY AND NOT BE LIMITED TO NORMAL WORKING HOURS, AND THAT THE CONTRACTOR SHALL DEFEND, INDEMNIFY, AND HOLD THE OWNER HARMLESS FROM ANY AND ALL LIABILITY, REAL OR ALLEGED, IN THE CONNECTION WITH THE PERFORMANCE OF WORK ON THIS PROJECT, EXCEPTING FOR LIABILITY ARISING FROM THE SOLE NEGLIGENCE OF THE OWNER.
2. LANDSCAPE HOLDING AREA, INGRESS, EGRESS, AND SITE ACCESS SHALL BE COORDINATED WITH THE OWNER'S REPRESENTATIVE. THE CONTRACTOR SHALL NOT DISTURB OR IMPEDE ACCESS TO THE SITE BY OTHERS.
3. CONTRACTOR SHALL BE RESPONSIBLE FOR THE DAILY CLEANUP OF PREMISES AND REMOVAL OF DISCARDED OR SURPLUS MATERIALS AND RUBBISH IN A LAWFUL MANNER. ANY OPEN PITS OR TRENCHES SHALL BE COMPLETELY AND THOROUGHLY BARRICADED DURING THE WORKDAY AND COMPLETELY FILLED IN AT THE END OF EACH WORKDAY. ALL MATERIALS, PRODUCTS, AND EQUIPMENT REMAINING ON SITE AT THE END OF THE WORK DAY SHALL BE STORED IN AN ORGANIZED FASHION IN THE AREA DESIGNATED BY THE OWNER'S REPRESENTATIVE.
4. ALL CONTRACTORS AND SUBCONTRACTORS SHALL HAVE A SET OF APPROVED CONSTRUCTION DOCUMENTS ON SITE AT ALL TIMES.
5. DURING CONSTRUCTION, CREWS ARE REQUIRED TO HAVE AT LEASE ONE (1) ENGLISH SPEAKING PERSON ON SITE.

EXISTING TO REMAIN PLANT CARE:

1. FLAG ALL TREES AND PALMS TO BE SAVED IN PLACE. PROVIDE BARRICADING IN ACCORDANCE WITH LOCAL STANDARDS AROUND TREES AND PALMS TO BE SAVED IN PLACE PRIOR TO SITE DEMOLITION.
2. ALL WORK INVOLVING EXISTING TREES TO REMAIN SHALL BE UNDERTAKEN IN THE PRESENCE OF A REGISTERED ARBORIST. ALL TREES AND PALMS TO BE SAVED SHALL BE EXAMINED FOR DAMAGE, DISEASE AND INSECT INFESTATION. PARTS OF THE TREE SHOWING THESE CONDITIONS SHALL BE TREATED OR PRUNED IN ACCORDANCE WITH THE ARBORISTS RECOMMENDATIONS. REMOVE ALL DEAD LIMBS AND VINES.
3. ROOT PRUNE ALL TREES TO BE SAVED PER DRAWINGS PRIOR TO GRADING AROUND TREES.
4. TREAT ALL CUTS WITH A FUNGICIDAL BARRIER. BACKFILL THE TRENCH, WITHIN 4 HOURS OF DIGGING, WITH A 1:1 MIXTURE OF SITE SOIL AND SAWDUST OR OTHER FINE ORGANIC MATERIAL. DO NOT COMPACT.
5. FERTILIZE THE PLANT AS DIRECTED BY THE CONSULTING ARBORIST.

PLANT MATERIAL NOTES:

1. ALL PLANT MATERIAL SHALL BE FLORIDA GRADE NO. 1 OR BETTER AS SPECIFIED IN GRADES AND STANDARDS FOR NURSERY PLANTS PARTS I AND II. DIVISION OF PLANT INDUSTRY, FLORIDA DEPARTMENT OF AGRICULTURE AND CONSUMER SERVICES, LATEST EDITION, AND SHALL CONFORM TO CURRENT AMERICAN ASSOCIATION OF NURSERYMAN STANDARDS FOR NURSERY STOCK.
2. CONTAINER GROWN PLANTS: A MINIMUM OF 80% OF THE CONTAINER ROOTBALL MUST BE BOUND BY THE ROOT SYSTEM. ENCIRCLING OR "RING" ROOTS ARE PROHIBITED AND PLANTS WILL BE REJECTED.
3. ALL SOD SHALL BE WEED AND WEED SEED FREE, WITH A 2" THICKNESS OF ROOTS CAPABLE OF HOLDING SAND. SOD SHALL BE FRESHLY-CUT WITHIN TWENTY-FOUR (24) HOURS OF LAYING AND LAID WITH TIGHTLY-BUTTED JOINTS. HAND RAKING SHALL BE DONE AS NECESSARY TO ENSURE PROPER EVEN GRADES AND CLEAR SURFACES FOR SOD. STAKING OF SOD SHALL BE DONE AS NECESSARY TO PREVENT MOVEMENT OF MATERIAL.
4. ALL PLANT MATERIAL SHALL BE PROTECTED DURING TRANSPORT AND DELIVERY TO JOB SITE WITH SHADE CLOTH OR OTHER ACCEPTABLE MEANS OF WINDBURN PREVENTION.
5. SUBSTITUTION OF PLANT MATERIALS WILL NOT BE PERMITTED UNLESS AUTHORIZED BY THE OWNER'S REPRESENTATIVE; ALL SUBSTITUTIONS MUST MEET MINIMUM SPECIFICATIONS ON THE PLANT LIST.
6. SUBSTITUTION OF FIELD GROWN TREES FOR TREES THAT ARE SPECIFIED AS CONTAINER GROWN WILL NOT BE PERMITTED UNLESS OTHERWISE APPROVED BY THE OWNER'S REPRESENTATIVE. IF SUBSTITUTION IS APPROVED, ALL PLANT SPECIFICATIONS WILL APPLY TO APPROVED BALLED AND BURLAPPED MATERIAL.
7. NEW PLANT MATERIAL TO BE INSTALLED WILL BE FIELD ADJUSTED TO ACCOMMODATE EXISTING PLANT MATERIAL SUCH AS OVERHEAD CANOPY TREES, UNDERSTORY TREES AND SHRUBS OR GROUND COVER. THIS WILL INSURE EXISTING PLANT MATERIAL TO REMAIN IN ITS NATURAL STATE. THEREFORE, NO EXISTING PLANT MATERIAL WILL BE ALTERED BY REMOVING, CUTTING, TRIMMING OR DESTROYING IN ORDER TO INSTALL NEW PLANT MATERIAL.
8. ALL TREES SHALL BE LOCATED AT LEAST SIX FEET AWAY FROM THE CENTERLINE OF SWALES AND FROM PROPOSED STORMWATER INLETS.

PLANTING:

1. TREES GROWN IN GROW BAGS OR GROW BAG TYPE MATERIAL MUST HAVE THE GROW BAG REMOVED ENTIRELY PRIOR TO PLANTING.
2. BALLED AND BURLAPPED OR ANY BASKETED MATERIAL SHALL HAVE THE TOP ONE THIRD (1/3) OF DEGRADABLE BURLAP AND TOP ONE THIRD (1/3) OF WIRE CAGE PULLED BACK AND REMOVED FROM THE BASE OF THE TRUNK. STRAPS MUST BE CUT AND REMOVED ENTIRELY PRIOR TO INSTALLATION.
3. CONTRACTOR SHALL NOTIFY OWNERS REPRESENTATIVE IF ANY CONFLICTS EXIST BETWEEN THE BUILT ENVIRONMENT AND PLANS (I.E. UTILITY CABINETS, UTILITY VALVES, STREET SIGNS, SIDEWALK LOCATIONS)

PLANTING AREA PREPARATION NOTES:

1. THE CONTRACTOR SHALL STAKE LOCATIONS AND LIMITS OF TREES, PLANTING, MULCH, AND SOD AREAS TO REFLECT PLANS TO GREATEST EXTENT POSSIBLE. FOR TREES LOCATED BETWEEN BACK OF CURB AND FRONT OF SIDEWALK, PLACE TREES EQUAL DISTANCE FROM CURB AND SIDEWALK. FOR TREES LOCATED OUTSIDE OF RIGHT-OF-WAY, PLACE TREES A MINIMUM OF 5' FROM BACK OF SIDEWALK, 2.5' FOR PALMS. COORDINATE WITH OWNER'S REPRESENTATIVE TO INSPECT STAKING LOCATIONS AND LIMITS ON SITE. PROVIDE MINIMUM 5 BUSINESS DAYS ADVANCE NOTIFICATION OF PROPOSED INSPECTION. CONTRACTOR SHALL MAKE MODIFICATIONS AS MAY BE REQUESTED.
2. WORK WITHIN 15' OF EXISTING TREES TO REMAIN SHALL BE PERFORMED USING HAND TOOLS. ANY DISTURBED ROOTS SHALL BE SEVERED USING CLEAN AND SHARP TOOLS.
3. HERBICIDE APPLICATION: BEGIN TURF SPRAYING PROCESS A MINIMUM 30 DAYS PRIOR TO PLANTING AS FOLLOWS: SPRAY TURF AREA TO BE KILLED WITH GLYPHOSATE PER MANUFACTURER'S RECOMMENDATIONS. 7 DAYS AFTER SPRAYING, CLOSE MOW TO 1" HEIGHT. 14 DAYS AFTER CLOSE MOWING, RE-SPRAY WITH GLYPHOSATE PER MANUFACTURER'S RECOMMENDATIONS. PROTECT EXISTING PLANTS TO REMAIN FROM OVER-SPRAY OR SPRAY WITHIN ROOT ZONE. CONTRACTOR TO ENSURE TOTAL WEED ERADICATION. 7 DAYS AFTER RE-SPRAYING, PROCEED WITH TURF REMOVAL AND LANDSCAPE INSTALLATION AS DESCRIBED BELOW.
4. FOR PROPOSED INDIVIDUAL TREE PLANTING PITS

   KILLED TURF TO BE REMOVED SHALL BE CLEARED AND GRUBBED TO A MINIMUM DEPTH OF 4". EXCAVATED MATERIAL SHALL BE REMOVED FROM THE SITE AND DISPOSED OF IN A LAWFUL MANNER. TURF SHALL BE THOROUGHLY REMOVED PRIOR TO THE PLANTING AND BACKFILL PROCESS. INSTALL TREES AS DETAILED. ESTABLISH FINISHED PRE-MULCHING GRADE WITHIN 4" BELOW TOP OF SURROUNDING TURF OR HARDSCAPE.

   TO ASSURE DRAINAGE/PERCOLATION OF INDIVIDUAL TREE PLANTING PITS PRIOR TO INSTALLATION, CONTRACTOR SHALL FILL SAMPLE TREE PITS (1 IN 5) WITH WATER AND OBSERVE PERCOLATION. HOLES SHALL PERCOLATE IN 30 MINUTES OR LESS. BRING DISCREPANCIES TO THE ATTENTION OF THE OWNER'S REPRESENTATIVE.

   INSTALL BACKFILL MIXTURE IN LIFTS AND TAMP LIGHTLY AROUND EACH AND EVERY PLANT. THOROUGHLY FLUSH WITH WATER AT EACH LIFT AND MAKE ADJUSTMENTS TO PROVIDE PROPERLY SET PLANT MATERIAL WITH THE TOP OF ROOTBALL 1"-2" ABOVE FINISHED GRADE.
5. FOR PROPOSED PLANTING AREAS

   KILLED TURF TO BE REMOVED SHALL BE CLEARED AND GRUBBED TO A MINIMUM DEPTH OF 6". EXCAVATED MATERIAL SHALL BE REMOVED FROM THE SITE AND DISPOSED OF IN A LAWFUL MANNER. TURF SHALL BE THOROUGHLY REMOVED PRIOR TO THE PLANTING PROCESS. BEFORE INSTALLING TOPSOIL, RAKE SUBSOIL SURFACE CLEAR OF STONES (1 INCH DIAMETER AND LARGER), DEBRIS, RUBBISH, DELETERIOUS MATERIALS. CONTAMINATED SOILS SHALL BE REMOVED AND REPLACED TO THEIR FULL DEPTHS AND EXTENTS. INSTALL TOPSOIL AT 6" DEPTH. TILL TOPSOIL AND EXISTING SUBSOIL TO A DEPTH OF 12". INSTALL PLANTINGS AS DETAILED. ESTABLISH OR RE-ESTABLISH PRE-MULCHING ROUGH GRADES INSURING POSITIVE FLOWS AND AESTHETIC LANDFORM SHAPES SHOWN IN THE GRADING PLANS.
6. FOR PROPOSED MULCH ON GRADE AREAS

   LEAVE KILLED TURF IN PLACE. REMOVE KILLED TURF ONLY AT EDGES OF BED, APPROXIMATELY 12" WIDTH, AS REQUIRED TO ESTABLISH A TAPERED DIFFERENCE IN GRADE SO THAT INSTALLED MULCH (3" DEPTH) SHALL BE FLUSH TO 1" BELOW ADJACENT TURF OR HARDSCAPE.
7. FOR PROPOSED SOD AREAS

   KILLED TURF TO BE REMOVED SHALL BE CLEARED AND GRUBBED TO A MINIMUM DEPTH OF 4". EXCAVATED MATERIAL SHALL BE REMOVED FROM THE SITE AND DISPOSED OF IN A LAWFUL MANNER. TURF SHALL BE THOROUGHLY REMOVED PRIOR TO THE PLANTING AND BACKFILL PROCESS. INSTALL TOPSOIL AT 2" DEPTH. TOPSOIL SHALL ESTABLISH FINISHED GRADE AT 2" BELOW EXISTING TURF OR HARDSCAPE. INSTALL SOD AS DETAILED. BUTT SOD PIECES TOGETHER CLOSELY AND ENSURE EDGES ARE TRIMMED EVENLY. ENSURE EXISTING GRADES ARE RE-ESTABLISHED FOR A FLUSH TRANSITION.
8. AN EVEN, WELL DEFINED LINE SHALL SEPARATE PLANTING AND MULCH ON GRADE AREAS FROM ALL SOD OR SEEDED AREAS.
9. BACKFILL MIXTURE FOR TREES AND SHRUBS SHALL CONSIST OF 25% COARSE SAND, 25% "BLENDED SOIL" OR EQUAL, AND 50% EXISTING SOIL.

   DISCARD REMAINING SOIL IN A LAWFUL MANNER. ALL PLANTING BACKFILL MIXTURES ARE SUBJECT TO APPROVAL BY THE OWNER'S REPRESENTATIVE. MIX THOROUGHLY PRIOR TO INSTALLATION ACCORDING TO THE FOLLOWING SCHEDULE:

1 GALLON:	0.003 CY (0.08 CF)	COARSE SAND AND 0.003 CY (0.08 CF) "BLENDED SOIL"
3 GALLON:	0.006 CY (0.16 CF)	COARSE SAND AND 0.006 CY (0.16 CF) "BLENDED SOIL"
7 GALLON:	0.015 CY (0.4 CF)	COARSE SAND AND 0.015 CY (0.4 CF) "BLENDED SOIL"
15 GALLON:	0.03 CY (0.8 CF)	COARSE SAND AND 0.03 CY (0.8 CF) "BLENDED SOIL"
30 GALLON:	0.06 CY (1.6 CF)	COARSE SAND AND 0.06 CY (1.6 CF) "BLENDED SOIL"
45 GALLON:	0.11 CY (2.9 CF)	COARSE SAND AND 0.11 CY (2.9 CF) "BLENDED SOIL"
65 GALLON:	0.17 CY (4.6 CF)	COARSE SAND AND 0.17 CY (4.6 CF) "BLENDED SOIL"
100 GALLON:	0.26 CY (7.1 CF)	COARSE SAND AND 0.26 CY (7.1 CF) "BLENDED SOIL"
200 GALLON:	0.88 CY (23.8 CF)	COARSE SAND AND 0.88 CY (23.8 CF) "BLENDED SOIL"
300 GALLON:	1.37 CY (37 CF)	COARSE SAND AND 1.37 CY (37 CF) "BLENDED SOIL"

   "BLENDED SOIL" SHALL CONSIST OF: 1/3 MUSHROOM COMPOST OR PEAT, 1/3 COMMERCIALLY PROCESSED AND COMPOSTED COW MANURE AND 1/3 COMPOSTED BARK. SUBMIT PRODUCT SAMPLE/DATA SHEET FOR BLENDED SOIL COMPONENTS TO OWNER'S REPRESENTATIVE FOR APPROVAL PRIOR TO PURCHASE AND INSTALLATION.

10. TOPSOIL IMPORTED TO THE SITE SHALL BE SIEVED TOPSOIL, FREE OF ROCKS AND DEBRIS. CONTRACTOR SHALL SUBMIT SOIL ANALYSIS RESULTS FROM AN APPROVED AGRONOMIC SOILS TESTING LABORATORY FOR A MINIMUM OF PH, ORGANIC CONTENT, SOLUBLE SALTS, AND TEXTURE WITH A STATEMENT OF SUITABILITY FOR BAHIA (PASPALUM NOTATUM 'ARGENTINE'), ST. AUGUSTINE (STENOTAPHRUM SECUNDATUM 'FLORATAM'), ZOYSIA (ZOYSIA JAPONICA 'EMPIRE') SOD AND SHRUBS/GRASSES. TOPSOIL SHALL BE FREE OF DELETERIOUS MATERIALS THAT WOULD BE HARMFUL TO PLANT GROWTH, SHALL BE FREE OF NEMATODES, SHALL BE OF UNIFORM QUALITY AND SHALL HAVE A PH VALUE BETWEEN 6.5 AND 7.5 (AS DETERMINED IN ACCORDANCE WITH ASTM E70). PEAT SHALL BE STERILIZED TO MAKE FREE OF ALL VIABLE NUT GRASS AND OTHER UNDESIRABLE WEEDS. IT IS THE CONTRACTOR'S RESPONSIBILITY TO ENSURE SUITABILITY FOR GROWTH OF ALL PROPOSED PLANT MATERIAL. SUBMIT PRODUCT SAMPLE/DATA SHEET FOR TOPSOIL TO OWNER'S REPRESENTATIVE FOR APPROVAL PRIOR TO PURCHASE AND INSTALLATION.

    LANDSCAPE CONTRACTOR SHALL BEAR FINAL RESPONSIBILITY FOR PROPER SURFACE DRAINAGE OF PLANTED AREAS. FINISH GRADE ALL PREPARED TOPSOIL AREAS TO A SMOOTH, EVEN SURFACE ENSURING A MINIMUM 3% POSITIVE DRAINAGE AWAY FROM STRUCTURES AND ELIMINATE ANY LOW AREAS WHICH MAY COLLECT WATER. ANY DISCREPANCY IN THE DRAWINGS, OBSTRUCTION ON THE SITE, OR PRIOR WORK DONE BY ANOTHER PARTY WHICH THE LANDSCAPE CONTRACTOR FEELS PRECLUDES ESTABLISHING PROPER DRAINAGE SHALL BE IMMEDIATELY BROUGHT TO THE ATTENTION OF OWNER'S REPRESENTATIVE.

11. INSTALL FERTILIZER PER MANUFACTURER RECOMMENDATIONS. CONTRACTOR SHALL CONFIRM FERTILIZER REQUIREMENTS PER LOCAL MUNICIPALITY. AS A MINIMUM FOR BIDDING PURPOSES THE CONTRACTOR SHALL ASSUME THE FOLLOWING CONCERNING FERTILIZER:

    FOR INITIAL INSTALLATION OF TREES AND SHRUBS, FERTILIZER IS ASSUMED TO BE CONTROLLED RELEASE FERTILIZER WITH A 15-9-12 ANALYSIS AND CONTAINING TRACE ELEMENTS MG, S, B, CU, FE, MN, MO, AND ZN. FERTILIZER GRANULES SHALL BE COMPOSED OF DRY NUTRIENTS ENCAPSULATED IN MULTIPLE LAYERS OF POLYMERIC RESIN.

    FOR INSTALLATION OF BAHIA, ST. AUGUSTINE AND ZOYSIA SOD, FERTILIZER IS ASSUMED TO BE CONTROLLED RELEASE FERTILIZER WITH A 16-4-8. SOURCE FOR N SHALL BE RESIN-COATED UREA OR RESIN COATED AMMONIUM SALTS. MN, ZN, AND CU SHALL BE SULFATE FORMS. FE SHALL BE GRANULAR CHELATED IRON.

    APPLICATION RATES ARE PROVIDED AS A RECOMMENDATION ONLY. IT IS THE CONTRACTOR'S RESPONSIBILITY TO PROVIDE APPROPRIATE FERTILIZER/AMENDMENTS TO ENSURE PROPER ESTABLISHMENT AND VIGOR OF PLANT MATERIAL:

    1.0 OZ PER EA 1 GALLON CONTAINER
    3.0 OZ PER EA 3 GALLON CONTAINER
    6.0 OZ PER EA 7 GALLON CONTAINER
    9.0 OZ PER EA 15 GALLON CONTAINER
    16.0 OZ PER EA 30 GALLON CONTAINER
    4.0 OZ PER EA 45 GALLON CONTAINER
    32.0 OZ PER EA 65 GALLON CONTAINER
    48.0 OZ PER EA 100 GALLON CONTAINER
    64.0 OZ PER EA 200 GALLON CONTAINER
    96.0 OZ PER EA 300 GALLON CONTAINER
    FOR GRASSING AND SOD AREAS: APPLY 6 LBS/1000SF.

12. BUILD EARTHEN SAUCER TO CONTAIN WATER AROUND EACH INDIVIDUAL TREE PLANTING PIT AND AT THE PERIMETER OF ALL PLANTING AREAS. REMOVE EXCESS EXCAVATED SOIL FROM THE SITE AND DISPOSE OF IN A LAWFUL MANNER.
13. SPREAD MULCH AROUND INDIVIDUAL TREE RINGS, PLANTING AND MULCH AREAS.

    MULCHING FOR INDIVIDUAL TREE RINGS, PLANTING, AND MULCH AREAS SHALL BE PINE BARK NUGGETS. MULCH SHALL BE UNIFORMLY SPREAD OVER THE FULL DIAMETER OF EACH INDIVIDUAL TREE RING, PLANTING, AND MULCH AREA. MULCH AREAS INCLUDE INITIAL INSTALLATION (3" DEPTH) PLUS RE-MULCHING (1.5" DEPTH MINIMUM) A MINIMUM ONCE PER YEAR DURING THE (1) YEAR WARRANTY PERIOD. MULCH SHALL NOT BE PLACED AGAINST TRUNKS OR STEMS OF PLANTS. SUBMIT PRODUCT SAMPLE/DATA SHEET FOR MULCH TO OWNER'S REPRESENTATIVE FOR APPROVAL PRIOR TO PURCHASE AND INSTALLATION.
14. PRE-EMERGENT HERBICIDE SHALL BE APPLIED TO ALL INDIVIDUAL TREE RINGS, PLANTING, AND MULCH AREAS. THE HERBICIDE ACTIVE INGREDIENTS SHALL BE SUITABLE FOR CONTROL OF ANNUAL AND PERENNIAL BROADLEAF WEEDS AND GRASSES. THE HERBICIDE SHALL BE APPLIED BY HAND. MANUFACTURER RECOMMENDATIONS FOR APPLICATION METHOD, TIMING AND APPLICATION RATE SHALL BE STRICTLY ADHERED TO.

LANDSCAPE SCHEDULE:

PLANT SCHEDULE

SYMBOL	CODE	QTY	BOTANICAL / COMMON NAME	REMARKS
TREES				
	ILE COM	19	Ilex cassine / Dahoon Holly	1.5" CAL., 9' HT. x 3' SPD., FLORIDA NO. 1
	ILE VOM	19	Ilex vomitoria / Yaupon Holly	1.5" CAL., 8' HT. x 3' SPD., FLORIDA NO. 1
	MAG GRA	11	Magnolia grandiflora / Southern Magnolia	2" CAL., 10-12' HT. x 2-3' SPD., FLORIDA NO. 1
R	PIN ELL	13	Pinus elliottii / Slash Pine	3.5" CAL., 12-14' HT. x 3-5' SPD., FLORIDA NO. 1, TREE REPLACEMENT
R	QUE VI2	6	Quercus virginiana / Southern Live Oak	3.5" CAL., 14' HT. x 5' SPD., FLORIDA NO. 1 TREE REPLACEMENT
	QUE VIR	13	Quercus virginiana / Southern Live Oak	2" CAL., 8-10' HT. x 3-5' SPD., FLORIDA NO. 1
SHRUBS				
	POD MAC	20	Podocarpus macrophyllus / Yew Podocarpus	36" HT. x 24" FULL TO POT
	VIB OBO	83	Viburnum obovatum / Walter's Viburnum	24" HT. x 18" SPD., FULL TO POT
	VIB SUS	183	Viburnum suspensum / Sandankwa Viburnum	24" HT. x 18" SPD., FULL TO POT
	ZAM FLO	5	Zamia floridana / Florida Coontie	24" HT. x 24" SPD., FULL TO POT

SYMBOL	CODE	QTY	BOTANICAL / COMMON NAME	SPACING	REMARKS
SHRUB AREAS					
	ILX NAN	236	Ilex vomitoria 'Nana' / Dwarf Yaupon Holly	30" o.c.	12" HT. x 12" SPD., FULL TO POT
GROUND COVERS					
	TRA ASI	960	Trachelospermum asiaticum / Asiatic Jasmine	18" o.c.	6" HT., 3-5 RUNNERS, FULL TO POT

FREDDY'S STEAKBURGERS
MOUNT DORA, FLORIDA

FFC OF CENTRAL FLORIDA

halff
1000 N. ASHLEY DR., SUITE 900
TAMPA, FL 33602
TEL: (813) 620-4500

REVISION

NO	DATE	DESCRIPTION

THE SEAL APPEARING ON THIS DOCUMENT WAS AUTHORIZED BY:

LAURA M. DUPLAIN — 6667408
NAME — PLA LICENSE

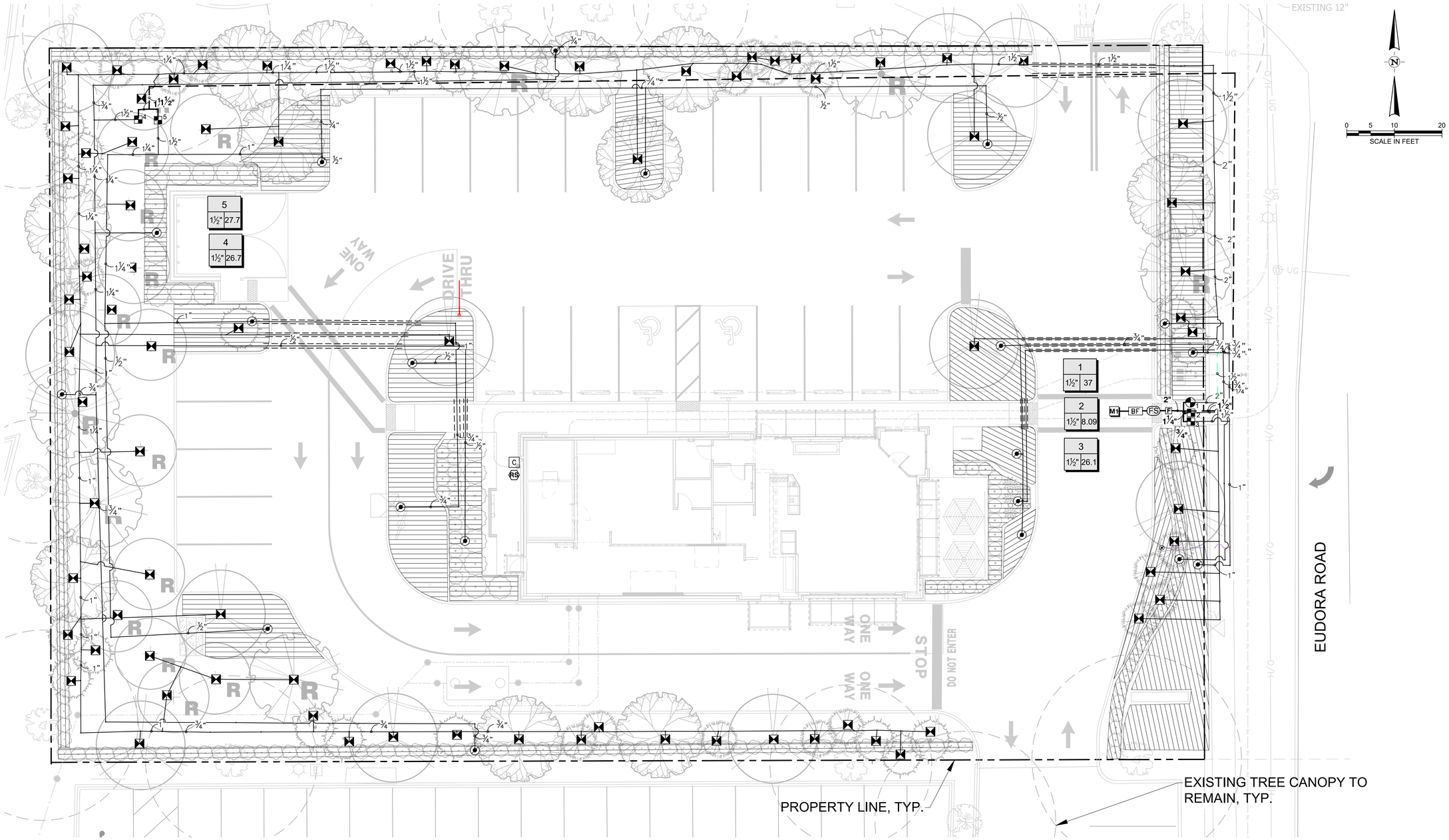

IRRIGATION LEGEND

SYMBOL	MANUFACTURER/MODEL/DESCRIPTION
25 50 10 20	Hunter PCB-R Flood Bubbler, 1/2in. FIPT. With Purple Cap for Reclaimed Water Use. 2 Bubblers @ 0.25 GPM each per tree.
SYMBOL	**MANUFACTURER/MODEL/DESCRIPTION**
	Hunter ICZ-151-XL-40 (2) Drip Control Zone Kit. 1-1/2in. ICV Globe Valve with 1in. HY100 filter system. Pressure Regulation: 40psi. Flow Range: 20 GPM to 60 GPM. 120 mesh stainless steel screen. 1-1/2in. inlet x single 2in. outlet
	Pipe Transition Point above grade Pipe transition point from PVC lateral to drip tubing with riser to above grade installation.
	Area to Receive Dripline Hunter HDL-09-12-R HDL-09-12-R: Hunter Dripline with 0.9 GPH flow. Light brown tubing with purple striping. Emitters at 12" O.C. Dripline laterals spaced at 12" apart, with emitters offset for triangular pattern. Install with Hunter PLD barbed or PLD-LOC fittings.

SYMBOL	MANUFACTURER/MODEL/DESCRIPTION
	Hunter ICV-G-R 1.5in. Plastic Electric Remote Control Valves, Angle Configuration, with NPT Threaded Inlet/Outlet, for Commercial/Municipal Use. With Reclaimed Water ID, Purple Handle.
BF	Febco 825Y 1" Reduced Pressure Backflow Preventer
C	Hunter I2C-0800-M 8 Station Outdoor Modular Controller. No Module Required. Commercial Use. Metal Cabinet.
RS	Hunter RFC Rain and freeze sensor, with conduit installation, mount as noted. Normally closed switch.
FS	Hunter HFS-100 Flow Sensor for use with ACC controller, 1in. Schedule 40 Sensor Body, 24 VAC, 2 amp.
F	Hunter HFR-100-075-25 Filter and Regulator Combo Kit.1in. MPT inlet x 3/4in. FPT outlet filter with 150 mesh stainless steel screen. Pressure regulated at 25 PSI.
M1	Water Meter 1" Reclaim

EXISTING TREES:

CONTRACTOR TO AVOID WORKING WITHIN EXISTING TREE DRIP LINE IF POSSIBLE. ALL WORK WITHIN EXISTING TREE DRIP LINE SHALL BE DONE USING HAND TOOLS ONLY. CONTRACTOR TO KEEP ROOT DISTURBANCE TO A MINIMUM.

IMPORTANT:

- IRRIGATION DESIGN TO MEET CITY OF MOUNT DORA IRRIGATION STANDARDS.
- IT IS THE CONTRACTOR'S RESPONSIBILITY TO KEEP A CLEAN SET OF AS-BUILT DRAWINGS ON SITE DURING THE INSTALLATION OF THIS SYSTEM. AS-BUILT DRAWINGS MUST BE UPDATED DAILY AND PROVIDED TO THE OWNER'S REPRESENTATIVE PRIOR TO FINAL PAYMENT.
- ALL PRESSURES AND FLOWS SHALL BE ADEQUATE FOR THE COMPLETION OF THIS PROJECT.
- IRRIGATION ZONES SHALL BE DIVIDED INTO DRIP, SPRAY, ANNUAL/PLANTER, AND TREE BUBBLER ZONES. IRRIGATION TYPES MAY NOT OVERLAP.

CITY OF MOUNT DORA IRRIGATION NOTE

ALL INSTALLED IRRIGATION SYSTEMS SHALL BE DESIGNED TO PROVIDE IRRIGATION APPROPRIATE TO MEET THE NEEDS OF THE LANDSCAPE AREA TO BE SERVED. IN EVALUATING IRRIGATION PLANS, THE PRIMARY CONSIDERATION SHALL BE WATER CONSERVATION. IRRIGATION SYSTEMS SHALL BE DESIGNED TO PROVIDE THE MINIMUM IRRIGATION NECESSARY TO ENSURE SURVIVAL OF THE PLAN MATERIAL AND SHALL BE DESIGNED TO AVOID RUNOFF AND PROMOTE OPTIMAL PERCOLATION. THE PROPERTY OWNER OR APPLICANT SHOULD ALSO SEE THE IRRIGATION PLAN REQUIREMENTS IN SECTION 14.07.05 A.2.(1) - IRRIGATION PLAN.

1. THE USE OF A TEMPORARY IRRIGATION SYSTEM THAT CAN BE REMOVED FOLLOWING ESTABLISHMENT OF VEGETATION IS THE PREFERRED METHOD OF IRRIGATION AND PERMANENT INSTALLED IRRIGATION SYSTEMS ARE DISCOURAGED.
2. LANDSCAPE IRRIGATION SHALL COMPLY WITH THE APPICABLE WATER USE PERMITS, RULES, AND WATER SHORTAGE ORDERS OF THE WATER MANAGEMENT DISTRICT WHERE THE IRRIGATION WILL OCCUR.
3. TO CONSERVE POTABLE WATER, RECLAIMED WATER, STORM WATER PONDS, WATER RECYCLING SYTEMS, AND WATER COLLECTED FROM CISTERNS SHALL BE ENCOURAGED FOR LANDSCAPE IRRIGAITON WATER IF THE WATER QUALITY WILL MEET THE NEEDS OF THE LANDSCAPE. SUCH USE MUST COMPLY WITH THE APPLICABLE WATER USE PERMITS, RULES AND WATER SHORTAGE ORDERS OF THE WATER MANAGEMENT DISTRICT WHERE THE LANDSCAPE IRRIGATION WILL OCCUR. DEVELOPMENTS SEEKING TO USE WATER FROM RETENTION PONDS OR NATURAL LAKES FOR LANDSCAPE IRRIGATION SHALL COMPLY WITH ALL APPLICABLE WATER USE PERMITS, RULES AND WATER SHORTAGE ORDER OF THE WATER MANAGMENT DISTRICT WHERE THE LANDSCAPE IRRIGATION WILL OCCUR.

IRRIGATION DESIGN STANDARDS:

ALL IRRIGATION SYSTEMS SHALL BE INSTALLED IN ACCORDANCE WITH ONE OF THE FOLLOWING STANDARDS:

a) FLORIDA WATER STAR PROGRAM; OR
b) ADHERE TO SEC. 9.01.05 E.2.b)

IRRIGATION CERTIFICATION:

WITHIN 30 DAYS OF ANY IRRIGATION SYSTEM INSTALLED PURSUANT TO THIS SECTION, THE PROPERTY OWNER SHALL SUBMIT TO THE COUNTY WRITTEN CERTIFICATION FROM THE FLORIDA WATER STAR INSPECTOR, LICENSED IRRIGATION CONTRACTOR OR LICENSED LANDSCAPE PROFESSIONAL THAT THE IRRIGATION SYSTEM ON THE PROPERTY MEETS THE REQUIREMENTS OF THIS SECTION, EXCEPT THAT THE OWNER, ACTING AS THE OWNER-BUILDER MAY CERTIFY THE IRRIGATION SYSTEM AS MEETING THE REQUIREMENTS HEREIN. ALL PROPERTIES SUBJECT TO SUCH CERTIFICATION MAY BE INSPECTED TO ENSURE COMPLIANCE WITH THE REQUIREMENTS OF THIS SECTION.

Call Before You Dig

Call Sunshine State One Call, at **811** or **800-432-4770**, two full days before digging in any easement, right-of-way or permitted use area.

FREDDY'S STEAKBURGERS
MOUNT DORA, FLORIDA

FFC OF CENTRAL FLORIDA

halff
1000 N. ASHLEY DR., SUITE 900
TAMPA, FLORIDA 33602
TEL: (813) 620-4500

REVISION		
NO.	DATE	DESCRIPTION

THE SEAL ORIGINALLY APPEARING ON THIS DOCUMENT WAS AUTHORIZED BY:

LAURA M. DUPLAIN 6667408
NAME PLA LICENSE NO.
11/19/2024
DATE

THE RECORD COPY OF THIS DRAWING IS ON FILE AT THE OFFICES OF:

HALFF ASSOCIATES, INC.

CA 3380 & LC 26000645 FL
FIRM OR BUSINESS NO. STATE

PROJECT NO.:	57565.001
ISSUED:	JUNE 2024
DRAWN BY:	SG
CHECKED BY:	LMD
SCALE:	N.T.S.
SHEET TITLE:	IRRIGATION PLAN

LI100

FILE NAME: A:\57000s\57565\001\LI\CADD\L-BASE-IRRI-57565.001.dwg DATE: November 19, 2024, TIME: 9:00 AM, USER: ah5043

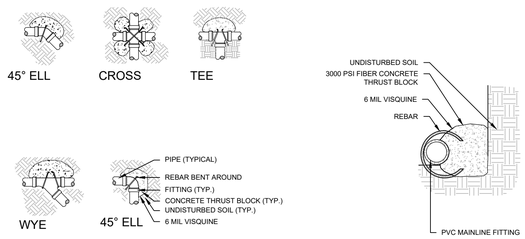

NOTES:

1. SUPPLY LINES 2.0 INCHES IN DIAMETER AND LARGER SHALL RECEIVE CONCRETE THRUST BLOCKS AS SPECIFIED HEREIN & AS APPLICABLE.
2. ALL CONCRETE TO BE 2800 PSI OR STRONGER.
3. ALL REBAR SHALL BE RUST-FREE.
4. FITTINGS TO BE WRAPPED IN VISQUEEN BEFORE POURING THE THRUST BLOCK.
5. CONCRETE IS NOT TO INCASE THE IRRIGATION MAINLINE

A TYPICAL THRUST BLOCKING DETAILS
SCALE: N.T.S.

NOTES:

1. BUBBLERS ARE TO PLACED AT THE MIDPOINT BETWEEN THE EDGE OF THE ROOTBALL AND THE MAIN TRUNK. SECURE BUBBLER TO TOP OF ROOTBALL WITH A SOIL ANCHORING STAPLE.
2. THE BUBBLERS SHALL BE PLACED 180° APART, IN SLOPING GROUNDS, THE BUBBLERS SHALL BE PLACED UPHILL FROM THE TREE TRUNK AND 150° APART.
3. PROVIDE (5' MINIMUM LENGTH) SUFFICIENT FUNNY PIPE HOSE SO THE BUBBLERS CAN BE MOVED TO A DIFFERENT LOCATION IN THE FUTURE.
4. PROVIDE 2 BUBBLERS FOR EACH TREE.

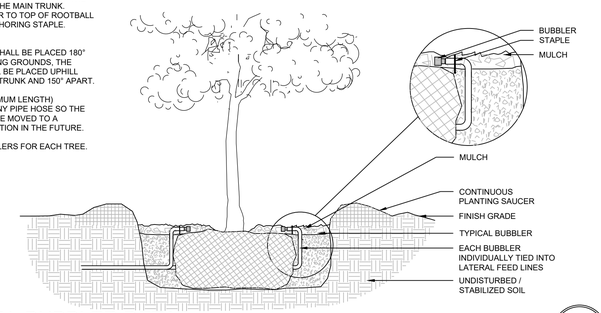

B TYPICAL BUBBLER DETAIL
SCALE: N.T.S.

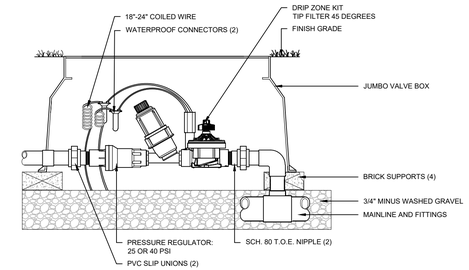

C TYPICAL VALVE (DRIP)
SCALE: N.T.S.

1. 6-FEET LINEAR LENGTH OF WIRE, COILED
2. WATERPROOF CONNECTION
3. ZONE ID TAG
4. CONTROL VALVE:
5. VALVE BOX
6. FINISH GRADE/TOP OF MULCH
7. PVC UNION
8. PVC SCH 40 ELL OR TEE
9. PVC SCH 80 NIPPLE
10. BRICK (1 OF 4)
11. PVC BALL VALVE
12. PVC MAINLINE PIPE
13. SCH 80 NIPPLE (2-INCH LENGTH, HIDDEN) AND SCH 40 ELL
14. PVC SCH 40 OR MEGALUG TEE OR ELL AS REQUIRED
15. PVC SCH 40 MALE ADAPTER
16. 3.0-INCH MINIMUM DEPTH OF 3/4-INCH WASHED GRAVEL
17. MIRAFI 140NC GEOTEXTILE FABRIC
18. PVC LATERAL PIPE

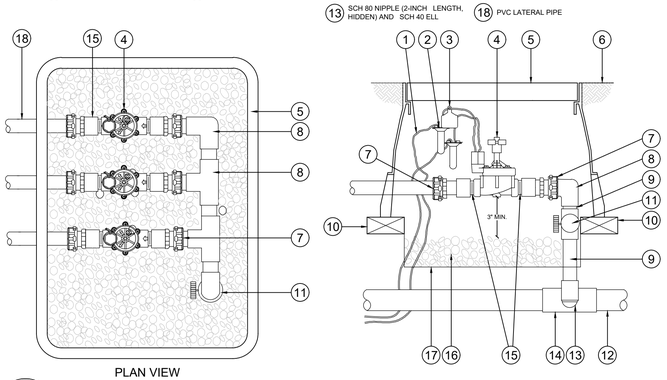

PLAN VIEW

D TYPICAL VALVE MANIFOLD (BUBBLERS)
SCALE: N.T.S.

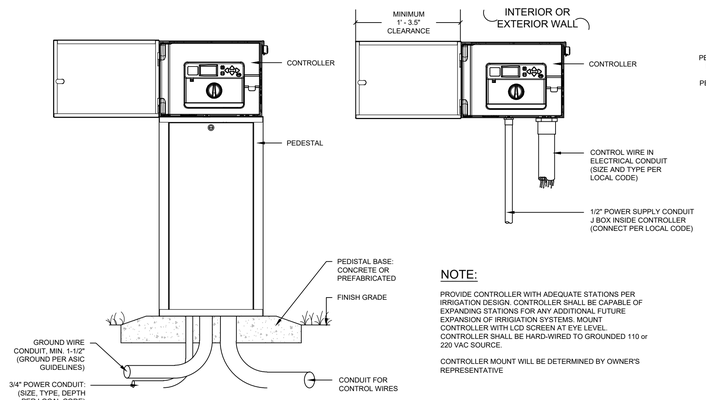

GROUND MOUNT

NOTE:

PROVIDE CONTROLLER WITH ADEQUATE STATIONS PER IRRIGATION DESIGN. CONTROLLER SHALL BE CAPABLE OF EXPANDING STATIONS FOR ANY ADDITIONAL FUTURE EXPANSION OF IRRIGATION SYSTEMS. MOUNT CONTROLLER WITH LCD SCREEN AT EYE LEVEL. CONTROLLER SHALL BE HARD-WIRED TO GROUNDED 110 or 220 VAC SOURCE.

CONTROLLER MOUNT WILL BE DETERMINED BY OWNER'S REPRESENTATIVE

WALL MOUNT

E TYPICAL CONTROLLER
SCALE: N.T.S.

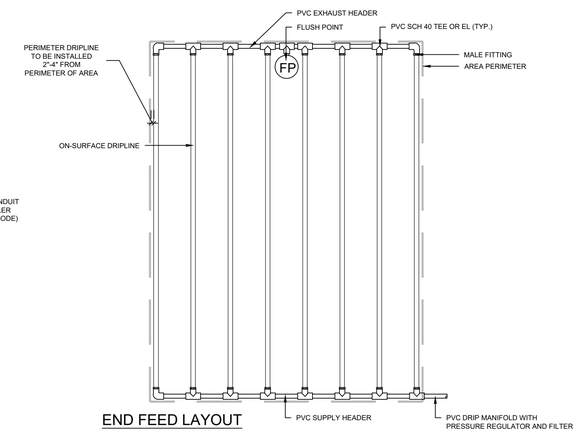

END FEED LAYOUT

F TYPICAL DRIPLINE LAYOUT
SCALE: N.T.S.

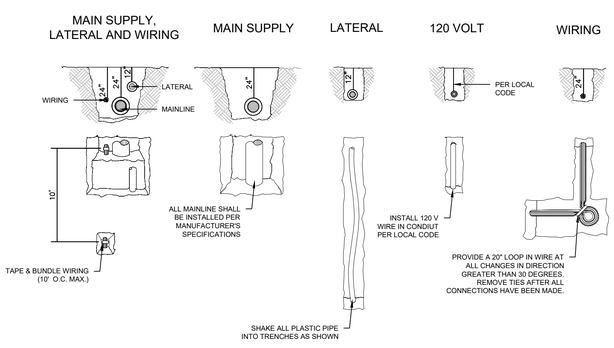

G TYPICAL TRENCH DETAIL
SCALE: N.T.S.

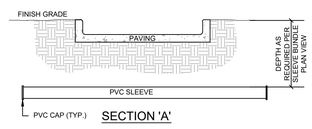

SECTION 'A'

NOTES:

1. TO FACILITATE FUTURE CABLE INSTALLATION, CONDUITS ARE PLACED AS STRAIGHT AS POSSIBLE WITHIN THE TRENCH.
2. WHERE CONDUIT BREAKS ARE ANTICIPATED (I.E. AT ROAD CROSSINGS WITH MEDIAN ACCESS) THE ENTIRE LENGTH SHALL BE INSTALLED AS ONE UNIT AND THEN THE BREAK SHALL BE CUT AND REMOVED.
3. SLEEVING SHALL EXTEND A MINIMUM OF 24" BEYOND EDGE OF PAVEMENT.
4. THE LOCATION OF SLEEVE ENDS SHALL BE RECORDED USING TWO PERMANENT REFERENCE POINTS AND THE APPROXIMATE DEPTH BELOW FINISH GRADE.
5. CONDUITS SHALL BE INSTALLED WITH CLEAN (BARB FREE) ENDS AND FREE OF CRACKING AND OTHER DAMAGE.
6. CONTRACTOR TO REFER TO IRRIGATION PLANS FOR SLEEVE SIZE, QUANTITY AND LOCATION

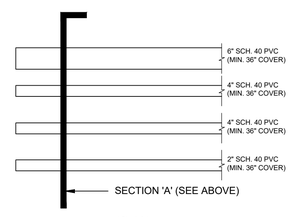

PLAN

*REQUIRED CONDUIT SIZES FOR NON STANDARD SLEEVE BUNDLES.

H SLEEVE BUNDLE
SCALE: N.T.S.

PIPE SIZE TABLE

IRRIGATION ZONE DEMAND GALLONS PER MINUTE (GPM)	MINIMUM PIPE SIZE
5-10	3/4"
11-15	1"
16-25	1-1/4"
26-32	1-1/2"
33-52	2"
53-75	2-1/2"
76-110	3"

REFER TO EACH IRRIGATION ZONE ON PLAN DRAWINGS FOR ZONE GPM

ALL PIPE SHALL BE SIZED SO AS NOT TO EXCEED 5 FPS

I PIPE SIZE TABLE
SCALE: N.T.S.

FREDDY'S STEAKBURGERS
MOUNT DORA, FLORIDA

FFC OF CENTRAL FLORIDA

halff
1000 N. ASHLEY DR., SUITE 900
TAMPA, FLORIDA 33602
TEL: (813) 620-1460

REVISION		
NO.	DATE	DESCRIPTION

THE SEAL ORIGINALLY APPEARING ON THIS DOCUMENT WAS AUTHORIZED BY:

LAURA M. DUPLAIN 6667408
NAME PLA LICENSE NO.
11/19/2024
DATE

THE RECORD COPY OF THIS DRAWING IS ON FILE AT THE OFFICES OF:

HALFF ASSOCIATES, INC.

CA 3380 & LC 26000645 FL
FIRM OR BUSINESS NO. STATE

PROJECT NO.:	57565.001
ISSUED:	JUNE 2024
DRAWN BY:	SG
CHECKED BY:	LMD
SCALE:	N.T.S.
SHEET TITLE:	IRRIGATION DETAILS

LI500

FILE NAME: A:\57000s\57565\001\LA\CADD\L-BASE-IRRI-57565.001.dwg DATE: November 19, 2024, TIME: 9:00 AM, USER: ah5043

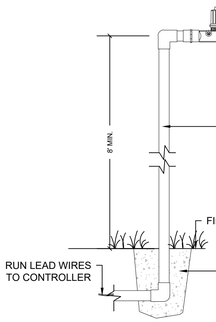

GROUND MOUNT

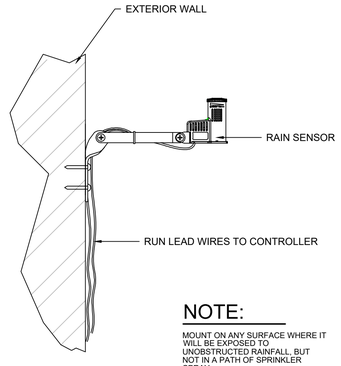

WALL MOUNT

NOTE:

MOUNT ON ANY SURFACE WHERE IT WILL BE EXPOSED TO UNOBSTRUCTED RAINFALL, BUT NOT IN A PATH OF SPRINKLER SPRAY

K TYPICAL RAIN SENSOR

SCALE: N.T.S.

(OR APPROVED EQUAL)

VALVE SCHEDULE

NUMBER	MODEL	SIZE	TYPE	GPM	PSI	PSI @ POC	PRECIP
1	Hunter ICV-G-R	1-1/2"	Bubbler	37	33.1		1.72 in/h
2	Hunter ICZ-151-XL-40 (2)	1-1/2"	Area for Dripline	8.09	24.5		1.44 in/h
3	Hunter ICZ-151-XL-40 (2)	1-1/2"	Area for Dripline	26.1	25.5		1.45 in/h
4	Hunter ICZ-151-XL-40 (2)	1-1/2"	Area for Dripline	26.67	33.3		1.44 in/h
5	Hunter ICZ-151-XL-40 (2)	1-1/2"	Area for Dripline	27.7	30.8		1.44 in/h

CRITICAL ANALYSIS

Generated:	2024-10-21 07:25
P.O.C. NUMBER: 01	
Water Source Information:	Reclaim
FLOW AVAILABLE	
Water Meter Size:	1"
Flow Available	45 GPM
PRESSURE AVAILABLE	
Static Pressure at POC:	65 PSI
Elevation Change:	5.00 ft
Service Line Size:	8"
Length of Service Line:	20 ft
Pressure Available:	63 PSI
DESIGN ANALYSIS	
Maximum Station Flow:	36 GPM
Flow Available at POC:	45 GPM
Residual Flow Available:	9 GPM
Critical Station:	1
Design Pressure:	15 PSI
Friction Loss:	15.7 PSI
Fittings Loss:	0.78 PSI
Elevation Loss:	0 PSI
Loss through Valve:	1.64 PSI
Pressure Req. at Critical Station:	34.5 PSI
Loss for Fittings:	0.01 PSI
Loss for Main Line:	0.15 PSI
Loss for POC to Valve Elevation:	0 PSI
Loss for Backflow:	10.4 PSI
Loss for Water Meter:	7.8 PSI
Critical Station Pressure at POC:	52.9 PSI
Pressure Available:	63 PSI
Residual Pressure Available:	10.1 PSI

IRRIGATION_SCHEDULE

SYMBOL	MANUFACTURER/MODEL/DESCRIPTION	QTY
25 50 10 20	Hunter PCB-R Flood Bubbler, 1/2in. FIPT. With Purple Cap for Reclaimed Water Use. 2 Bubblers @ 0.25 GPM each per tree.	162
SYMBOL	MANUFACTURER/MODEL/DESCRIPTION	QTY
	Hunter ICZ-151-XL-40 (2) Drip Control Zone Kit. 1-1/2in. ICV Globe Valve with 1in. HY100 filter system. Pressure Regulation: 40psi. Flow Range: 20 GPM to 60 GPM. 120 mesh stainless steel screen. 1-1/2in. inlet x single 2in. outlet	4
	Pipe Transition Point above grade Pipe transition point from PVC lateral to drip tubing with riser to above grade installation.	21
	Area to Receive Dripline Hunter HDL-09-12-R HDL-09-12-R: Hunter Dripline with 0.9 GPH flow. Light brown tubing with purple striping. Emitters at 12" O.C. Dripline laterals spaced at 12" apart, with emitters offset for triangular pattern. Install with Hunter PLD barbed or PLD-LOC fittings.	5,758 s.f.
SYMBOL	MANUFACTURER/MODEL/DESCRIPTION	
	Hunter ICV-G-R 1.5 in. Plastic Electric Remote Control Valves, Angle Configuration, with NPT Threaded Inlet/Outlet, for Commercial/Municipal Use. With Reclaimed Water ID, Purple Handle.	
BF	Febco 825Y 1" Reduced Pressure Backflow Preventer	
C	Hunter I2C-0800-M 8 Station Outdoor Modular Controller. No Module Required. Commercial Use. Metal Cabinet.	
RS	Hunter RFC Rain and freeze sensor, with conduit installation, mount as noted. Normally closed switch.	
FS	Hunter HFS-100 Flow Sensor for use with ACC controller, 1in. Schedule 40 Sensor Body, 24 VAC, 2 amp.	
F	Hunter HFR-100-075-25 Filter and Regulator Combo Kit.1in. MPT inlet x 3/4in. FPT outlet filter with 150 mesh stainless steel screen. Pressure regulated at 25 PSI.	
M1	Water Meter 1" Reclaim	
	Irrigation Lateral Line: PVC Schedule 40	
	Irrigation Lateral Line: PVC Class 200	
	Irrigation Mainline: PVC Class 200 SDR 21	
	Pipe Sleeve: PVC Schedule 40 Sleeves at each crossing to be 2 sizes larger than the pipe to be installed in the sleeve. sleeves shall extend 24" beyond curb and be capped.	

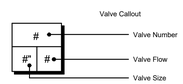

GENERAL IRRIGATION NOTES:

1. SCOPE OF WORK: THE WORK CONSISTS OF THE PREPARATION OF DESIGN DOCUMENTS AND INSTALLING A COMPLETE UNDERGROUND IRRIGATION SYSTEM, INCLUDING THE FURNISHING OF ALL LABOR, EQUIPMENT, PERMITS, MATERIALS, AND THE PERFORMANCE OF ALL OPERATIONS IN CONNECTION WITH THE CONSTRUCTION OF THE IRRIGATION SYSTEM. IT SHALL INCLUDE FURNISHING AND INSTALLING ALL PLASTIC AND GALVANIZED STEEL PIPE AND FITTINGS, AUTOMATIC CONTROL VALVES, RAIN / MOISTURE SENSING DEVICES, PRESSURE RELIEF VALVES, CHECK VALVES, VALVE ACCESS BOXES, SPRINKLER HEADS, ELECTRIC CONTROLLERS, FLOAT SWITCHES, ELECTRIC WIRE, PUMPS, PUMP INTAKE AND SUCTION SYSTEM, NECESSARY MOTOR STARTERS, RELAYS, ETC., AS CALLED FOR IN THESE SPECIFICATIONS, OR AS MAY BE REQUIRED FOR PROPER OPERATION OF THE SYSTEM.
2. POINT OF CONNECTION SHALL BE A RECLAIM WATER METER, SPECIFIC LOCATION TO BE IDENTIFIED BY OWNER'S REPRESENTATIVE
3. LIMITS OF IRRIGATION: PROVIDE 100% COVERAGE OF ALL PREPARED PLANTING BEDS AS SHOWN ON THE DRAWINGS WITH TREES, SHRUBS, AND GROUNDCOVERS. TREES ISOLATED IN LAWN AREAS SHALL BE PROVIDED WITH A BUBBLER AND ZONED INDEPENDENTLY. SOD AND/OR SEEDED AREAS AS IDENTIFIED IN PLANTING PLANS ARE INTENDED TO BE PROVIDED WITH 100% IRRIGATION COVERAGE.
4. IRRIGATION TO MEET PLANT CITY IRRIGATION STANDARDS AS WELL AS ANY OTHER APPLICABLE MUNICIPAL AND STATE LAWS AND RULES AND REGULATIONS GOVERNING OR RELATING TO ANY PORTION OF THIS WORK. THESE LAWS, RULES, AND REGULATIONS ARE HEREBY INCORPORATED INTO, AND MADE A PART OF THESE SPECIFICATIONS, AND THEIR PROVISIONS SHALL BE CARRIED OUT BY THE IRRIGATION SUBCONTRACTOR. ANYTHING CONTAINED IN THESE SPECIFICATIONS SHALL NOT BE CONSTRUED TO CONFLICT WITH ANY OF THE ABOVEMENTIONED RULES, REGULATIONS OR REQUIREMENTS; AND SHOULD A CONFLICT OCCUR, THE RULES OR REQUIREMENTS OF THE GOVERNING CODE SHALL BE ADHERED TO. HOWEVER, WHEN THESE SPECIFICATIONS CALL FOR OR DESCRIBE MATERIALS, WORKMANSHIP, OR CONSTRUCTION OF A BETTER QUALITY, HIGHER STANDARD OR LARGER SIZE, THESE SPECIFICATIONS AND/OR APPROVED DRAWINGS SHALL TAKE PRECEDENCE OVER THE REQUIREMENTS OF SAID RULES, REGULATIONS OR CODES.
5. ANY PERMITS FOR THE INSTALLATION OR CONSTRUCTION OF ANY OF THE WORK INCLUDED UNDER THIS CONTRACT, WHICH ARE REQUIRED BY ANY OF THE LEGALLY CONSTITUTED AUTHORITIES HAVING JURISDICTION, SHALL BE OBTAINED AND PAID FOR BY THE IRRIGATION SUBCONTRACTOR. PRIOR TO COMMENCEMENT OF HIS OPERATIONS ON SITE, COPIES OF PERMIT SHALL BE SENT TO OWNER'S REPRESENTATIVE.
6. DESIGN PLANS: THE LANDSCAPE IRRIGATION SUBCONTRACTOR SHALL SUBMIT DESIGN DRAWINGS FOR REVIEW AND APPROVAL 35 DAYS PRIOR TO INSTALLATION TO THE RLA. DRAWINGS SHALL BE LEGIBLE AND PREPARED AT A SCALE SUITABLE FOR CONSTRUCTION. PLANS SHALL INCLUDE LEGEND, WATER SOURCE, POINT(S) OF CONNECTION, DESIGN OPERATING PRESSURE, AND FLOW RATE PER ZONE, AVERAGE APPLICATION RATE PER ZONE IN GALLONS PER MINUTE. WATERING SCHEDULE, LOCATIONS OF PIPE AND SLEEVES WITH SIZES INDICATED, CONTROLLERS, VALVES, SPRINKLERS, BACKFLOW PREVENTION DEVICE, ELECTRICAL SUPPLY, ROADWAYS, SIDEWALKS, STRUCTURES AND OTHER RELEVANT SITE CONDITIONS.
7. PRIOR TO PURCHASING, CONTRACTOR SHALL SUBMIT SHOP DRAWINGS FOR ALL PROPOSED MATERIALS INCLUDING BUT NOT LIMITED TO PUMP, WELL, BACKFLOW PREVENTER, CONTROLLER, PIPE, FITTINGS, SLEEVES, VALVES, ETC.
8. HEAD PLACEMENT SHOULD ALWAYS BE DONE WHILE TAKING INTO CONSIDERATION.
   a. WHAT IS THE BEST FOR THE GROWTH AND MAINTENANCE OF THE PLANT MATERIAL.
   b. MAINTAINING A CONSTANT AND EVEN DISTRIBUTION AND PRECIPITATION RATE.
   c. THE SPACING BETWEEN HEADS SHALL NOT EXCEED 50% OF THE DIAMETER FOR HEADS SPACED ON A SQUARE PATTERN OR 60% OF THE DIAMETER FOR HEADS SPACED ON A TRIANGULAR PATTERN.
9. AUTOMATIC CONTROL TIMER, PUMP/WELL ASSEMBLY, BACKFLOW PREVENTER, AND RAIN SENSOR LOCATIONS TO BE VERIFIED WITH OWNER'S REPRESENTATIVE.
10. FIELD ALTERATIONS MADE IN THE IRRIGATION CONTRACT DRAWING MUST BE IN THE BEST INTEREST OF THE PLANT MATERIAL AND LANDSCAPE IRRIGATION SYSTEM. CHANGES MADE BY THE IRRIGATION CONTRACTOR WHICH ARE DEEMED, BY THE OWNER AND/OR OWNER'S REPRESENTATIVE, NOT TO BE IN CONFORMITY WITH THIS CRITERIA WILL BE REMOVED AND REPLACED AT THE IRRIGATION CONTRACTOR'S EXPENSE. IF A QUESTION SHOULD ARISE AS TO THE BEST WAY TO COMPLETE A FIELD ALTERATION, CONTACT OWNER'S REPRESENTATIVE FOR APPROVAL.
11. THE CONTRACTOR SHALL STAKE OUT THE LOCATION OF EACH RUN OF PIPE, DRIP IRRIGATION ARRAYS AND VALVES PRIOR TO TRENCHING. TRENCHES FOR PIPE SHALL BE CUT TO REQUIRED GRADE LINES, AND COMPACTED TO PROVIDE ACCURATE GRADE AND UNIFORM BEARING FOR THE FULL LENGTH OF THE LINE. THE BOTTOM OF TRENCHES SHALL BE FREE OF ROCK OR OTHER SHARP EDGED OBJECTS. MINIMUM COVER SHALL BE AS FOLLOWS: PRESSURE MAINLINE 24" AT TOP OF THE PIPE TO FINISH GRADE. LATERAL PIPING 12" AT TOP OF PIPE FROM FINISH GRADE. SLEEVING UNDER ROADWAY 36" AT TOP OF PIPE FROM FINISH GRADE.
12. THE IRRIGATION AND LANDSCAPE CONTRACTORS SHALL COORDINATE THE PLACEMENT OF THE IRRIGATION EQUIPMENT AND LANDSCAPE MATERIAL WITHIN THE PLANTED AREA. THE IRRIGATION CONTRACTOR SHALL INSTALL HIS MATERIAL AT THE EDGE OF THE PLANTED AREAS AVOIDING PLANTS, ROOT BALLS, LIGHTS, BOLLARDS, FENCES, ETC.
13. OPEN CUTS IN ASPHALT AND WALKS ARE NOT PERMITTED. TRENCHES MUST BE PROTECTED FROM VEHICLE AND PEDESTRIAN TRAFFIC AT ALL TIMES. IT WILL BE THE IRRIGATION CONTRACTOR'S RESPONSIBILITY TO BARRICADE AND DIVERT TRAFFIC. ALL TRENCHES SHALL BE CLOSED AT THE END OF EACH WORKDAY.
14. SLEEVES UNDER ROADWAYS AND SIDEWALKS ARE THE RESPONSIBILITY OF THE IRRIGATION CONTRACTOR AND SHALL BE INSTALLED, IF POSSIBLE, PRIOR TO ANY PAVING. SLEEVING DEPTH TO BE A MINIMUM OF 36" FROM TOP OF PIPE TO FINISHED GRADE BELOW ALL ROADWAYS. SLEEVING BENEATH SIDEWALKS SHALL BE LOCATED AND PROVIDED BY THE IRRIGATION CONTRACTOR. SLEEVING SIZES TO BE INSTALLED PER PLANS OR TWO TIMES LARGER THAN THE PIPE TO BE PLACED INSIDE THE SLEEVE. WHICHEVER IS GREATER. SLEEVING MATERIAL TO BE SCHEDULE 40 PVC. SLEEVE ALL WIRE CROSSINGS EITHER IN CONDUIT OR IN SCHEDULE 40 PVC PIPE (IF CONTROL WIRE IS DIRECT BURIAL).
15. ALL TRENCHES WITHIN FIFTEEN FEET (15') OF EXISTING TREES TO BE HAND EXCAVATED TO AVOID CONFLICTS WITH TREES.
16. NO ROOTS SHALL BE CUT WITHIN A FIFTEEN FOOT (15') RADIUS OF ALL EXISTING TREES. IRRIGATION PIPES AND CONDUIT SHOULD BE DIRECTIONAL BORED WITHIN THIS AREA.
17. CONTRACTOR SHALL COORDINATE ELECTRICAL AND WATER REQUIREMENTS AND POINT OF CONNECT WITH OWNER'S REPRESENTATIVE.
18. ALL PIPE SHALL BE SIZED SO AS NOT TO EXCEED 5 FPS.
19. INITIAL BACKFILL ON PVC LINE SHALL BE PULVERIZED NATIVE SOIL, FREE OF FOREIGN MATTER. SOIL OR SAND WITHIN 4" OF UNDERGROUND PIPING SHALL BE CLEAN. PLANT LOCATIONS SHALL TAKE PRECEDENCE OVER SPRINKLER AND PIPE LOCATIONS. THE CONTRACTOR SHALL COORDINATE THE PLACING OF THE SPECIMEN TREES AND SHRUBS WITH THE ROUTING OF LINES AND FINAL HEAD LOCATIONS.
20. RECORD DRAWINGS: AFTER FINAL ACCEPTANCE OF THE COMPLETED INSTALLATION, THE SUBCONTRACTOR SHALL BE RESPONSIBLE FOR THE PREPARATION OF COMPLETE, REPRODUCIBLE, RECORD DRAWINGS FOR SUBMITTAL TO THE OWNER. PLANS SHALL INCLUDE ANY FIELD CHANGES OR DEVIATIONS FROM THE ORIGINAL, APPROVED DESIGN DOCUMENTS WITH TWO SCALED POINTS OF REFERENCE FOR EACH ITEM.
21. CONTRACTOR SHALL SUPPLY ZONE MAP, PRECIPITATION RATES, ANY KEYS, OPERATING MANUALS, WARRANTIES, COPY OF THE CONTROLLER SCHEDULE, AND EXACT EQUIPMENT PARTS BREAKOUTS WITH MODEL NUMBERS, ETC IN A 3-RING BINDER TO OWNER'S REPRESENTATIVE UPON COMPLETION OF THE PROJECT.
22. THE DRAWINGS ARE TO BE CONSIDERED DIAGRAMMATIC. THE LOCATIONS OF THE EQUIPMENT SHALL BE COORDINATED IN THE FIELD, AND ADJUSTED AS NECESSARY TO AVOID CONFLICTS, AND TO REACT TO FIELD VARIABLES. DUE TO SMALL SCALE OF DRAWINGS, IT IS OFTEN NECESSARY TO SHOW PIPING OR OTHER ELEMENTS OUTSIDE RIGHTS-OF-WAY OR IN PAVEMENT AREAS. THE INSTALLATION OF ALL PIPING AND OTHER EQUIPMENT SHALL BE IN PERVIOUS AREAS AND WITHIN RIGHTS-OF-WAY UNLESS IT IS SPECIFICALLY NOTED TO THE CONTRARY.

ELECTRICAL SUPPORT FOR LANDSCAPE IRRIGATION SYSTEM:

1. FURNISH ALL LABOR, MATERIAL, EQUIPMENT AND INCIDENTALS REQUIRED AND INSTALL, PLACE IN OPERATION AND FIELD TEST ALL OPERATIONS IN CONNECTION WITH THE INSTALLATION OF THE ELECTRICAL FACILITIES REQUIRED FOR CONTROL WIRING FOR THE UNDERGROUND ELECTROMECHANICALLY CONTROLLED IRRIGATION SYSTEM, COMPLETE, AND IN STRICT ACCORDANCE WITH THIS SECTION OF THE SPECIFICATIONS, THE APPLICABLE DRAWINGS, AND SUBJECT TO THE TERMS AND CONDITIONS OF THE CONTRACT.
2. THE CONTROLLERS FOR THE IRRIGATION VALVES SHALL BE INSTALLED AND WIRED, COMPLETE UNDER THIS SECTION.
   THE ELECTRICAL CONTRACTOR SHALL BRING WIRING AND CONNECTIONS TO A LOCATION APPROVED BY THE OWNERS REPRESENTATIVE FOR THE CONTROL PANEL(S), AND SHALL PROVIDE 110 VOLT CONNECTION FROM THE POWER SOURCE TO THE CONTROLLERS. (THE LOW VOLTAGE CONTROL WIRING SHALL BE RUN UNDERGROUND TO THE RESPECTIVE REMOTE VALVES BY THE IRRIGATION CONTRACTOR).
3. THE ELECTRICAL CONTRACTOR SHALL BE RESPONSIBLE FOR CONNECTING AND VERIFYING THE IRRIGATION CONTROLLERS TO BE OPERATIONAL. THE IRRIGATION CONTRACTOR IS ULTIMATELY RESPONSIBLE FOR PROVIDING A FULLY OPERATIONAL SYSTEM.
4. THE ELECTRICAL CONTRACTOR SHALL COORDINATE HIS WORK WITH THE IRRIGATION CONTRACTOR, GENERAL CONTRACTOR AND OTHER SUB-CONTRACTORS.
5. QUALITY ASSURANCE: ALL WORK SHALL BE PERFORMED BY AN ELECTRICIAN LICENSED IN THE STATE OF FLORIDA AND ALL WORK SHALL COMPLY WITH APPLICABLE NFPA REQUIREMENTS.
6. MATERIALS: ALL MATERIALS FURNISHED UNDER THIS CONTRACT SHALL BE NEW AND SHALL CONFORM TO THE FOLLOWING REQUIREMENTS:
   a. UNDERGROUND CONDUIT: SHALL BE RIGID SCHEDULE 80 PVC, EQUAL TO TYPE 80 HEAVY WALL RIGID PVC-CONDUIT SIZED TO PROVIDE EASY WIRE PULL WITH A MIN. 1 INCH INSIDE DIAMETER. ALL JOINTS SHALL BE SOLVENT WELDED IN ACCORDANCE WITH THE RECOMMENDATIONS OF THE MANUFACTURER. CONDUIT FITTINGS, ELBOWS, SWEEPS AND CEMENT SHALL BE PRODUCED BY THE SAME MANUFACTURER.
      1. CONDUIT FOR 120 AND 277 VOLT CIRCUITS SHALL BE SCHEDULE 80 ELECTRICAL CONDUIT.
      2. RIGID METAL CONDUIT: EXPOSED CONDUIT SHALL BE GALVANIZED RIGID METAL CONDUIT INSTALLED WITH CAST METAL FITTINGS.
   b. CONDUCTORS FOR LOW VOLTAGE CONTROL CIRCUITS (BELOW 24V): ALL WIRING USED FOR INTERCONNECTING THE AUTOMATIC REMOTE CONTROL VALVES FOR IRRIGATION WITH THE AUTOMATIC CONTROLLERS SHALL BE SINGLE STRANDED OR SOLID COPPER CONDUCTORS WITH TYPE UF, 600 VOLT INSULATION WHICH SHALL BEAR THE UL APPROVAL FOR DIRECT UNDERGROUND BURIAL FEEDER CABLE.
   c. INSULATION SHALL BE 4/64 INCH THICK MINIMUM COVERING OF AN APPROVED THERMOPLASTIC COMPOUND FOR POSITIVE WATERPROOF PROTECTION OF SIZE 12 THROUGH AND INCLUDING SIZE 10 AWG.
   d. WIRE CONNECTORS: CONNECTIONS TO REMOTE CONTROL IRRIGATION VALVES AND ALL SPLICES IN THE WIRING FOR SUCH VALVES SHALL BE MADE WITH WATERPROOF CONNECTORS AND SEALING CEMENT EQUAL TO RAIN BIRD SNAP-TITE CONNECTORS, MODEL ST-03.
   e. ALL VALVE CONTROL WIRES SHALL BE MINIMUM NO. 14 GAUGE UF, AND ALL COMMON GROUND WIRES SHALL BE MINIMUM NO. 14 GAUGE UF, COLOR CODED USING WHITE. ALL CONTROL WIRING SHALL BE COLOR CODED USING WHITE FOR THE COMMON WIRE AND SELECTED COLORS FOR THE CONTROL WIRES. GREEN COLOR WIRE SHALL NOT BE USED. ALL SPLICE CONNECTIONS SHALL BE MADE IN A JUNCTION BOX AND PULL BOX MARKED ON SHOP DRAWINGS FOR ACCESSIBILITY. ALL AREAS OF 90 DEGREE TURNS SHALL BE MADE WITH ELECTRICAL SWEEP ELBOWS.
   f. MISCELLANEOUS DEVICES: MISCELLANEOUS FITTINGS AND DEVICES NOT COVERED IN THE ABOVE SPECIFICATIONS SHALL BE AS REQUIRED FOR A COMPLETE INSTALLATION.

FREDDY'S STEAKBURGERS
MOUNT DORA, FLORIDA

FFC OF CENTRAL FLORIDA

halff
1000 N. ASHLEY DR., SUITE 900
TAMPA, FL 33602-3562
TEL: (813) 620-4500

REVISION		
NO.	DATE	DESCRIPTION

THE SEAL ORIGINALLY APPEARING ON THIS DOCUMENT WAS AUTHORIZED BY:

LAURA M. DUPLAIN — NAME
6667408 — PLA LICENSE NO.
11/19/2024 — DATE

THE RECORD COPY OF THIS DRAWING IS ON FILE AT THE OFFICES OF:

HALFF ASSOCIATES, INC.

CA 3380 & LC 26000645 — FIRM OR BUSINESS NO.
FL — STATE

PROJECT NO.:	57565.001
ISSUED:	JUNE 2024
DRAWN BY:	SG
CHECKED BY:	LMD
SCALE:	N.T.S.

SHEET TITLE:

IRRIGATION NOTES

LI501

FILE NAME: A:\57000s\57565\001\LA\CADD\L-BASE-IRRI-57565.001.dwg DATE: November 19, 2024, TIME: 9:00 AM, USER: ah5043

CITY OF MOUNT DORA

Planning and Development
510 N. Baker St.
Mount Dora, FL 32757
352-735-7113
plandev@cityofmountdora.com

DATE: January 15, 2025

TO: Planning and Zoning Commission

FROM: Development Review Committee
Ryan Winkler, AICP, Senior Planner

RE: **Request for 1st PUD Amendment;** Mount Dora Small Bay Mini Warehouse Facilities (Project Name); 4.92 Acres (Site Area); North of East Lincoln Avenue and West of US Highway 441 (General Location); Site Address: 1649 Lincoln Avenue (Location); Robby Joshi, Metro Architecture Partnership (Applicant); Michael J. Vedder, Lincoln1649 LLC (Owner); Farid J. Tawill, PE, Tawill Engineering, Inc (Engineer), Randy Buchanan, Landscape Dynamics (Landscape Architect);
Project No. PUD24-01AD

Recommendation:
Staff recommends approval of the above-referenced request.

Reference/Support:
Ordinance No. 2022-14 Final PUD for Vedder Holsters approved on October 18, 2022
Policy 4.g (7), FLUE of the Mount Dora 2045 Comprehensive Plan
Land Development Code (LDC) Section 3.4.5, PUD Planned Unit Development District

Background:
SITE SUMMARY:

Request Type:	PUD Amendment
Owner(s):	Michael J. Vedder, Lincoln1649 LLC
Applicant:	Robby Joshi, Metro Architects Partnership
Address:	1649 Lincoln Avenue, Mount Dora
General Location:	Located north side of Lincoln Avenue Street and west of U.S. Highway 441
Alternate Key No.:	1447097
Zoning District:	Planned Unit Development (Ord. 2022-14, Vedder Holsters)
Proposed Zoning District:	Planned Unit Development
Land Use Category:	Industrial
Overlays:	Northeast CRA
Site Area:	4.92 +/- acres
Existing Use:	Single family residence and detached garage
Proposed Use:	Light manufacturing, warehouse, and office.

Surrounding Property Table:

Direction	Jurisdiction	Future Land Use	Zoning District(s)	Existing Use(s)	Comments
North	City	Medium Density	R-2	Residential	Mount Dora Heights Subdivision
South	City	Recreation	GB	Recreation	Lincoln Ave Recreation Center
East	City	Commercial & Industrial	C-3 & WP-1	Light Industrial	Hallmark Nameplate
West	City	High Density	R-3	Residential	City Walk Villas

Background

The subject property is located on the north side of East Lincoln Avenue and west of US Highway 441 (see attached Vicinity Map). The subject property is comprised of approximately 4.92 acres with no wetlands nor floodzones and is developed with a single-family dwelling unit and accessory structures.

The property is zoned Planned Unit Development (PUD) by Ordinance 2022-14 which was approved on October 18, 2022, and established the Vedder Holsters Master Plan. The Vedder Holsters Master Plan proposed a two (2) phase development consisting of a 15,000-sf Office and 30,000-sf of Manufacturing/Warehouse building to accommodate light industrial uses. At the time, the proposed development was to accommodate Vedder Holsters, a gun holster manufacturer currently located in the Camp Ave Warehouses.

Pursuant to LDC Section 3.5.6.(f.), actual construction must begin within the planned unit development within 12 months of approval of the final master plan. If actual construction has not begun, the final master plan approval and any vesting which may be claimed thereby shall be void. The Vedder Holsters Final PUD expired on October 18, 2023, and an extension was not requested by the Applicant nor the Property Owner.

Analysis

The Applicant proposes to amend the existing PUD zoning district in order to establish a new Master Plan for the property. The proposed development includes three (3) mini-warehouse buildings totaling 50,680-sf (Building No. 1 – 11,880-sf, Building No. 2 – 19,400-sf, Building No. 3 – 19,400-sf) with parking, landscaping, and retention ponds. Building No. 1 is will have frontage along East Lincoln Avenue. The project is proposed to be developed in a single phase.

The subject property is designated with an Industrial future land use (FLU) category, in accordance with the 2045 Comprehensive Plan. This category is intended for light manufacturing, warehousing, and storage associated with a business or industrial use, wholesaling, distribution, office, and other related activities. Industrial parks with good internal parks with good internal circulation and attractive appearance from adjacent roads are encourage within this land use category. The proposed use is consistent with the designated FLU category.

The maximum impervious surface ratio is 65% and the floor area ratio is 0.7. The PUD Final Master Plan indicates the proposed ISR is 64% and FAR to be 0.25. The maximum building height is thirty-five (35) feet and the Applicant proposes a 26'-8" building height. Elevations of the proposed buildings are included with the PUD Final Master Plan.

The Land Development Code defines "Planned Unit Development" as "an area of land devoted by its owner to development as a single entity for a number of dwelling units and/or other uses in accordance with a plan which does not necessarily comply with the provisions of other zoning districts with respect to lot size, lot coverage, setbacks, off-street parking, bulk or type of dwelling, density and other restrictions." The Applicant does not propose deviations from the underlying land use category, however does request a deviation to LDC Section 3.5.6(f) expiration time frame to extend the standard one (1) year time frame to four (4) years. Staff is agreeable to this request.

Commercial Standards and Architectural Design

The Final Master PUD Plan indicates the proposed development will be consistent with LDC Section 6.13 Commercial Architectural and Site Design Requirements. The Applicant provided a set of elevations for the proposed development. The proposed elevations are consistent with the Architectural Design Standards. The Final Master PUD Plan demonstrates consistency with the Commercial Site Design Standards.

Access

The property is currently accessed off of East Lincoln Avenue. The Applicant proposes improvements to the existing apron and will add a second access off of East Lincoln to serve the development.

Traffic

The Applicant provided a Trip Generation Memorandum with the PUD Amendment application. According to the memo, the proposed development is anticipated to generate 78 daily AM and PM new trips.

According to the City of Mount Dora Traffic Impact Study Guidelines, a project that generates twenty-six (26) or more weekday AM peak hour, weekday PM peak hour or weekend net new peak hour trips will require the preparation of a TIS. A TIS will be required at the time of Site Plan Review.

Landscaping and Buffers

According to a tree survey and removal plan provided by the Applicant, there are 55 approved trees on site, and the applicant proposes to remove 27. The Applicant proposes to protect 28 trees on site; these trees are located along the rear and western property lines, abutting existing residential uses. The Applicant will be required to replant 42 replacement trees on site.

The Final Master PUD Plan includes a Landscaping Plan that indicates the proposed tree removal plan. The Applicant does not request a contribution to the City's Tree Bank, as all trees proposed for removal will be replaced on-site.

- TOTAL EXISTING NUMBER OF TREES SIZED 6" – 23.99": 46
- TOTAL EXISTING NUMBER OF TREES SIZED 6" – 23.99" REMOVED: 24
- TOTAL EXISTING NUMBER OF TREES SIZED 24" OR GREATER: 9
- TOTAL EXISTING NUMBER OF TREES SIZED 24" OR GREATER REMOVED: 3
- TOTAL NUMBER OF TREES REPLACED AT RATIO 1:1 FOR TREES REMOVED 6"–23.99": 24
- TOTAL NUMBER OF TREES PLACED AT RATIO 1:6 (FOR TREES REMOVED 24" OR GREATER): 18 REQ. 29 PROVIDED
- TOTAL NUMBER OF TREES REPLACED: 42(18 + 24)REQ. – (62 NEW CANOPY TREES PROVIDED)
- TOTAL NUMBER OF TREE DEFICIENT (NOT BEING REPLACED) FOR TREE BANK:

CONTRIBUTION AND INCLUDES TOTAL DOLLAR AMOUNT OF CONTRIBUTION FUNDS: $ 0.00

The Final PUD Master Plan includes a landscaping plan for the master development. Landscaping buffers are installed along each property line along right-of-way and adjacent properties including existing residential. The proposed landscaping is consistent with the LDC Section 6.6.

LANDSCAPE BUFFER

LANDSCAPE BUFFER REQUIREMENT			WIDTH		CANOPY TREES				UNDER-STORY TREES					SHRUBS
			REQUIRED	PROVIDED	REQUIRED	REQUIRED	EXISTING	PROVIDED	REQUIRED	REQUIRED	REQUIRED	EXISTING	PROVIDED	REQUIRED
BOUNDARY BUFFER	BOUNDARY TYPE	LINEAR FEET			3 PER 100 LINEAR FEET	4 PER 100 LINEAR FEET		3.5" CALIPER MINIMUM	5 PER 100 LINEAR FEET	5 PER 100 LINEAR FEET	6 PER 100 LINEAR FEET		1.5" CALIPER MINIMUM	HEDGE PLANTED 36" ON CENTER
1	b	335.34'	15'	25'	11			11		17			17	CONTINUOUS HEDGE
2	a	411.40'	10'	20'	13			13	21				21	CONTINUOUS HEDGE
3	B	229.51'	30'	30'		10	1	9	12			0	12	CONTINUOUS HEDGE
4	C	334.05'	40'	40'		14	15	0			21	0	21	6' WALL & CONTINUOUS HEDGE
5	B	271.56'	30'	30'		11	12	0			17	0	17	CONTINUOUS HEDGE
6	B	369.36'	30'	30'		15	0	15	19				19	CONTINUOUS HEDGE
TOTAL:					24	50	28	48	52	17	38	0	107	

Wastewater and Water Utilities

This development will be connected to the Wastewater Treatment Plant #2 (WWTP2). At the writing of this report, the City of Mount Dora does not have capacity at the WWTP2 to serve new projects.

LDC Section 6.4.2 (1) states "all development is required to be on central sewer except as stipulated in subsection 6.4.3." LDC Section 6.4.3 (1) states that septic tanks are not permitted when central sewer is available on the following basis:

Single-family residential	Within 200 feet
Minor subdivisions	Within 500 feet
Minor site plans	Within 1,000 feet
Site plans less than 10,000 sq. ft.	Within 1,000 feet

Pursuant to LDC Section 6.4.3, septic tanks are not permitted when central sewer is available within 1,000 feet for project site plans less than 10,000-sf. The proposed development is required to connect to the City's central potable water and sewer system.

Pursuant to LDC Section 6.10.2 (1), no final development order shall be issued by the city after the adoption of these regulations and no previously approved development may cause a change in use upon a parcel of property unless there is sufficient available capacity of concurrency public facilities

to meet the standards for levels of service. As to potable water, sanitary sewer, solid waste, and drainage concurrency public facilities, the necessary concurrency public facilities must be:

1. Available and in place at the time the development is authorized in accordance with the Mount Dora Comprehensive Plan; or

2. The development order or permit is issued subject to the condition that the necessary concurrency public facilities will be in place when the impacts of the development occur; or

3. The necessary public facilities are under construction at the time the development is authorized; or

4. The necessary concurrency public facilities are guaranteed in an enforceable development agreement which requires that the necessary facilities will be in place when the impacts of the development occur.

The applicant requested to extend to the PUD expiration date from one (1) year to four (4) years from the date of PUD approval in anticipation of wastewater capacity becoming available within the next four years.

PUD Ordinance:

The PUD Ordinance addresses the following details regarding development regulations for future development orders on the subject property.

1) PUD expiration date within four (4) years from adoption date of the PUD Amendment Ordinance.

2) A Development Order shall be issued for the subject development through Site Plan approval when sewer capacity is available.

3) Traffic Impact Study required with submittal of Site Plan application.

Development / Application Approval Process

The general process for the PUD application approval is as follows, in accordance with LDC Section 1.11:

1. Planned Unit Development (see subsection 3.4.5)
    a. Preliminary Master Plan (optional)
        1. Development Review Committee
        2. Planning and Zoning Commission
        3. City Council
    b. **Final Master Plan**
        1. Development Review Committee
        2. Planning and Zoning Commission
        3. City Council
    c. Subdivision plat or site plan for each section of the PUD (See: Site Plan Regulations)

2. Site Plan (see chapter V):
    1. Development Review Committee
    2. Planning and Zoning Commission
    3. Site Development Permit

Pursuant to LDC Section 3.4.5 (5.), the review procedures outlined within the PUD Zoning District shall be followed for first a preliminary master plan and then a final master plan, which shall be adopted by ordinance. The two steps are designed to allow the applicant to gain review and approval of general concepts prior to the preparation of detailed plans. Site Plans are required for each separate section of the PUD. However, if the applicant so chooses and is permitted by the development review coordinator, steps may be bypassed or combined in an attempt to reduce the time involved at the applicant's own risk. The applicant submitted a Site Plan Review application concurrently with the PUD Amendment application.

Pursuant to LDC Section 3.4.7, the planning and zoning commission and city council may deny the planned unit development application or return the PUD to the applicant for revisions. Planned unit developments are not guaranteed or a given by right. Consideration of a PUD is at the sole discretion of the city and may be rejected or denied for any reason including variations to existing development standards such as, but not limited to, building height, floor-area ratio, landscaping requirements, etc.

Staff Recommendation

Staff finds the application request consistent with the Land Development Code and Comprehensive Plan and accepts the request to extend the PUD expiration date from one to four years from the date of approval.

Attachments:
Vicinity Map
Application
Ordinance 2022-14 Final PUD for Vedder Holsters
DRC Comments (dated October 14, 2024)
Trip Generation Memo (dated February 29, 2024)
PUD Master Plan – Site
PUD Master Plan – Elevations
PUD Master Plan – Landscaping Plan
PUD Master Plan – Tree Removal Plan

VICINITY MAP

N

N.T.S.

Legend

City Limits

Subject Property

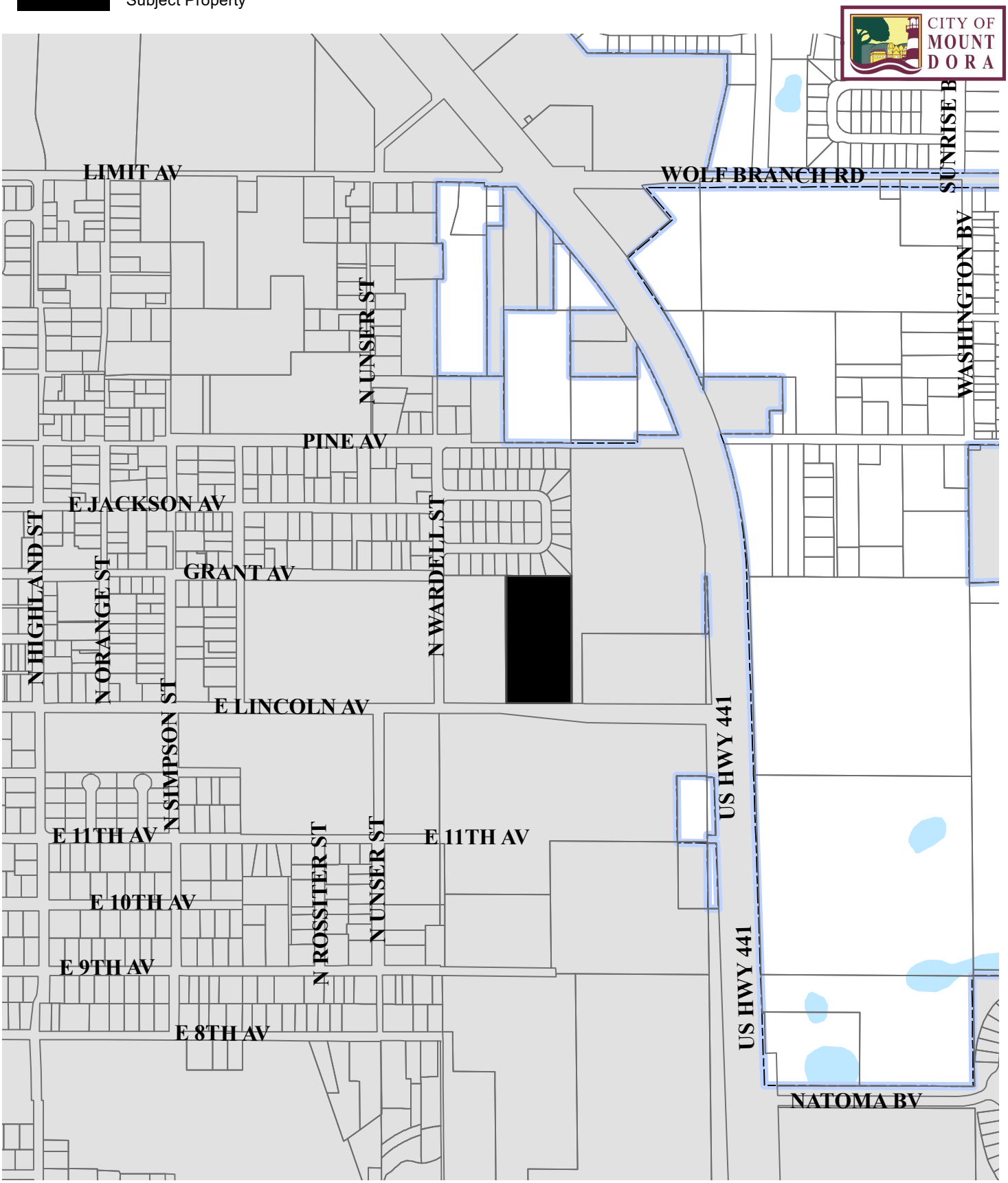

Date: 12/10/2024

Prepared by: Mount Dora Planning and Development Dept * 510 N. Baker Street, Mount Dora, FL 32757 * 352-735-7112

CITY OF MOUNT DORA
PLANNING AND DEVELOPMENT

CITY HALL
510 North Baker Street
Mount Dora, Florida 32735
352-735-7100
MountDora.gov

DEVELOPMENT REVIEW COMMITTEE COMMENTS

DATE:	October 14, 2024
FROM:	Vince Sandersfeld, City Manager
CONTACT:	352-735-7112 Ext.1712 or MicheleJ@MountDora.gov
THROUGH:	Michele Janiszewski, AICP, Senior Planner
PROJECT NAME:	Lincoln PUD Amendment
REVIEW TYPE:	PUD Amendment – Fourth Review

Administrative approval (or lack of comment on a specific item) does not constitute a waiver of any code requirements nor does it relieve the developer of responsibility to meet those requirements. It shall be the responsibility of the developer to correct any defects in the plans or the facility as constructed that results in a failure to meet applicable code requirements.

Review Comments

The applicant must revise the plan sets and/or provide additional information to address the following comments.

Planning and Zoning

Comments provided by Michele Janiszewski, janiszewskim@mountdora.gov

1. LDC Section 6.4.2 (1), states "all development is required to be on central sewer except as stipulated in subsection 6.4.3."

2. LDC Section 6.4.3 (1), states that septic tanks are not permitted when central sewer is available on the following basis:

   Septic tanks are not permitted when central sewer is available on the following basis:

Single-family residential	Within 200 feet
Minor subdivisions	Within 500 feet
Minor site plans	Within 1,000 feet
Site plans less than 10,000 sq. ft.	Within 1,000 feet

   The project is located within 1,000 feet of central sewer which means central sewer is considered available for the property. As such, septic tanks and any other form of wastewater treatment mechanisms would be prohibited on the property with the exception of central water.

Should the application proceed with the proposed wastewater device, Staff will not be able to support the application.

3. Pursuant to LDC Section 6.10.4 (b), capacity reservation is an option for rezoning applications. If seeking to reserve capacity at this point in time, please complete the enclosed Concurrency application with application fees and request the reservation of capacity. Please be advised, the drainage fixture unit (DFU) worksheet will need to be completed to determine the capacity reservation fees. If not reserving capacity at this time, please complete the enclosed non-concurrency affidavit.

4. Pursuant to LDC Section 6.10.5 (5), if the capacity of available public facilities is less than the capacity required to maintain the level of service standard for the impact of the development, the concurrency test is not passed and the applicant shall select one of the following options:
   a. Amend the application to reduce the need for public facilities to the capacity that is available; or
   b. Arrange to provide for public facilities that are not otherwise available; or
   c. Reapply for a certificate of capacity not less than six months following the denial of an application for a certificate of capacity; or
   d. Appeal the denial of the application for a certificate of capacity, pursuant to the provisions of subsection 6.10.10.

5. Sec. 44-344, Mount Dora Code of Ordinances, states that no septic tank shall be constructed within 200 feet of the sewer line.

6. Planning Staff recommends the following language to include in the PUD Ordinance Amendment the following language: PUD Expiration: Extend the PUD Expiration date from the standard one (1) year from date of approval to four (4) year PUD Expiration from date of approval.

7. Based on the Trip Generation Memorandum, prepared by Traffic Planning and Design, Inc. and dated February 29, 2024, the development is anticipated to generate 78 daily, 5 A.M. and 8 P.M. new trips. As such, a Tier 2 Traffic Study will be required with the Site Plan Application.

8. Elevations of the proposed buildings will be reviewed for the criteria established in LDC Section 6.13 with the Site Plan application.

9. Please be advised, the northern portion of the property is not within a floodzone nor an identified wetland system, but if wetlands are identified during site development, the site plan may need to be modified to provide the appropriate wetland buffers.

<u>City Water and Sewer Utilities</u>
Comments provided by Josh Kramm, krammj@mountdora.gov

1. As of printing of this report, the city of Mount Dora does not have wastewater treatment capacity at WWTP#2 to serve new developments. The city is reviewing options to increase wastewater treatment capacity and other facility improvements.

2. Plans do not show the septic tank design, layout of the tank, layout of the drain field and relation to other utilities including but not limited to water, storm water, and sanitary.

3. Include unobstructed dimensions of the leach field.

4. There is a note about a dry line but the details of this line are not shown.

5. Provide sanitary calculations.

6. Provide potable water calculations, main connections, and system review of impacts, conflicts, and demand.

7. Show right-of-ways and easements with measurements to proposed sanitary, septic, storm, potable water, leach fields, unobstructed areas around leach field, etc.

8. On the sheet labelled A-511 there is a note in the top left corner regarding a reported sanitary line that runs through the property. This reported line is not recorded and is a private connection between neighboring properties on either side and as such would not be located by utilities. The developer should be required to estimate the location of this connection and verify its alignment. The developer would then be required to make provisions to address the relocation of the private sanitary line.

{Rest of Page Intentionally Left Blank}

Informational Comments

The Offices or Departments of the City involved with the review process have provided informational comments to inform the applicant of Code requirements and/or processes that will be required as the project moves forward in the development process. The informational comments are listed below.

Planning and Zoning

Comments provided by Michele Janiszewski, janiszewskim@cityofmountdora.com

1. Once approved, the property will need to apply site plan approval and a site development permit prior to commencing construction activities.

2. Pursuant to LDC Section 3.4.5 (7), Planned Unit Developments:
   Special Provisions: The planning and zoning commission and city council may deny the planned unit development application or return the PUD to the applicant for revisions. Planned unit developments are not guaranteed or a given by right. Consideration of a PUD is at the sole discretion of the city and may be rejected or denied for any reason including variations to existing development standards such as, but not limited to, building height, floor-area ratio, landscaping requirements, etc.

3. This application is for PUD Amendment, which proposes to amend the PUD Ordinance #2022-14 for Vedder Holsters PUD to a new mini-warehouse use for flex-space storage. This amendment requires a revised Master PUD Plan to show the proposed uses and site design, establishing building design and site standards. The PUD Amendment and Master Plan shall be presented to the Planning and Zoning Commission (PZC) for recommendation and to the City Council for two readings at public hearing for final approval. Please be advised PUD Approval does not constitute a reservation of capacity.

4. When the PUD Amendment is approved, a site plan application shall be submitted to the Office of Planning and Zoning for site plan review. The Site Plan application shall be presented to the Planning and Zoning Commission for approval. Please be advised PUDs expire after one (1) year from PZC approval. Capacity is reserved at the time of final development order /site plan approval.

5. When the Site Plan is approved, a site development permit shall be obtained within the one (1) year of site plan approval. Construction shall conclude within two (2) years of obtaining site development permit.

Electric Utility
Comments provided by Steve Langley, langleys@mountdora.gov

1. Subject property is within the City of Mount Dora's service area for electricity.

2. Per City Ordinance all electric infrastructure required to serve the new facilities will be at the cost of the developer.

3. Close coordination will be required with the City Electric Department prior to and during construction to establish electric service. Owner/builder/developer must follow the rules and procedures contained in the document "Rules and Procedures for Electric Service" which may be downloaded from the City web site www.cityofmountdora.com. These rules include the required submission of electrical load information, and mandatory meetings with the Electric Department to determine the type of electric service and locations of all facilities. Complete details are contained in the "Rules and Procedures for Electric Service" that are contained in a PDF file that can be accessed through the following page links: Departments | Public Works and Utilities | Engineering | Standard Utility Details | Electric Service - Rules and Procedures (link to PDF File). This document may also be obtained from the City Building Department or the City Electric Department.

Building Services – Flood Review
Comments provided by Ryan Morgan, morganr@mountdora.gov

Property is located within floodzone X which is outside the Special Flood Hazard Area (MJ).

Lake County Public Works
Comments Provided by Seth Lynch, slynch@lakecountyfl.gov

No Comments.

CITY OF MOUNT DORA

City of Mount Dora
Planning and Development
510 N. Baker St.
Mount Dora, FL 32757
352-735-7112
Fax: 352-735-7191
E-mail: plandev@cityofmountdora.com

PLANNED UNIT DEVELOPMENT (PUD) AMENDMENT APPLICATION

Date: March 5, 2024 Project Name: Mount Dora Small Bay Warehouses

Amendment: (1st, 2nd, 3rd, 1st)

1. Applicant's Name: Robby Joshi
   Company's Name: Metro Architecture Partnership
   Address: 5401 South Kirkman Road
   City, State & Zip: Orlando, FL 32819
   Phone: (407) 354-4477 E-mail: Robby@Archenics.com

2. Property Owner's Name(s): Lincoln 1649 LLC
   Company's Name: Lincoln 1649, LLC
   Address: 24019 Green Gardens Court
   City, State & Zip: Mount Dora, FL 32757
   Phone: N/A E-mail: N/A

3. Engineer's Name: Farid J. Tawill, PE
   Company's Name: Tawill Engineering, Inc.
   Address: 6312 Buford Street #702
   City, State & Zip: Orlando, FL 32835
   Phone: (407) 399-1161 E-mail: tawillinc@aol.com

4. Landscape Architect: Randy Buchanan
   Company's Name: Landscape Dynamics
   Address: PO Box 2852
   City, State & Zip: Winter Park, FL 32790
   Phone: (407) 579-1811 E-mail: randeyebuchanan@gmail.com

5. The property generally located and list adjacent streets: Lincoln Avenue

6. Size of property in Acres: 4.92 AC Square Feet: 214,492.59 SF

7. Zoning District: PUD Future Land Use Category: Light Industrial / Warehouse

8. Provide description of the proposed use: Light manufacturing, warehouse and office

9. State the reason for this request (attach written summary if additional space is needed):

Previous PUD approval extended expired with a PUD Plan amendment.

10. Has an application been filed within the last 12 months (describe, if yes)? No

11. Provide justification (include data, analysis, etc): Coordination with consultants introduced the potential benefits of modifying the previous approved PUD with appropriate amendments.

CERTIFICATION AND SIGNATURE

By my signature below, I certify that the information contained in this application is true and correct to the best of my knowledge at the time of the application. I acknowledge that I understand and have complied with all of the submittal requirements and procedures and that this application is a complete application submittal pursuant to the City's Land Development Code. I further understand that an incomplete application submittal may cause my application to be deferred to the next posted deadline date.

Owner/Applicant Signature

03/05/2024.

Date

AGENT LETTER

TO: City of Mount Dora Planning & Development Department

This will serve as written authorization for Robby Joshi to act as agent for the purpose of submitting and processing of a PUD Amendment for the 4.91ac property located at 1649 Lincoln Avenue, Mount Dora, FL 32757.

Signed:

Mike Vedder

3-1-24

Date

NOTARY PUBLIC

STATE OF FLORIDA

Date: March 1st, 2024

Before me, the undersigned authority, personally appeared Michael Vedder, who acknowledges that he is appointing Robby Joshi to act as his agent for the purpose of submitting for a PUD Amendment application for the above referenced property. Michael Vedder is known to me ✓ or produced identification (type) _____ on this 1st day of March, 2024.

Signed:

Notary Public – State of Florida

Rachel E Minihan
Comm.: HH 454225
Expires: Oct. 15, 2027
Notary Public - State of Florida

TO: Planning Depratment
City of Mt. Dora, FL

FROM: Mina Atassi, E.I.
Turgut Dervish, P.E.

DATE: February 29, 2024

RE: Trip Generation Memorandum
G3 Mini-Warehouse Development Mt. Dora
TPD No. 5908

This trip generation memorandum is provided in support of a G3 Warehouse development in the City of Mount Dora, Florida. The site is located on Lincoln Avenue approximately 1,000 feet west of US 441. **Figure 1** depicts the site location. The proposed development will consist of 54,000 square feet of mini-warehousing space which includes 4,058 square-feet of small office spaces for warehouse operation. The estimated completion year of the project is 2025. Access to the site will be provided via two full access driveways on Lincoln Avenue. **Figure 2** provides a preliminary conceptual plan.

Trip Generation

The trip generation of the proposed development was calculated with the use of data from the *11th Edition of the Institute of Transportation Engineers (ITE) Trip Generation Manual.* The results of the trip generation calculations are summarized in **Table 1** and ITE trip generation sheets are included in **Attachment A**. As shown in the table, the project is expected to generate 78 daily trips of which 5 will occur in the A.M. peak hour and 8 will occur in the P.M. peak hour.

Table 1: Trip Generation Summary

LUC	Land Use	Size (KSF) (1)	Daily		AM Peak Hour				PM Peak Hour			
			Rate (2)	Trips	Rate (2)	Enter	Exit	Total	Rate (2)	Enter	Exit	Total
151	Mini-Warehouse	54.000	1.45	78	0.09	3	2	5	0.15	4	4	8
Total New Trips				**78**	**--**	**3**	**2**	**5**	**--**	**4**	**4**	**8**

Notes:
(1) KSF = 1,000 square feet
(2) ITE rates used

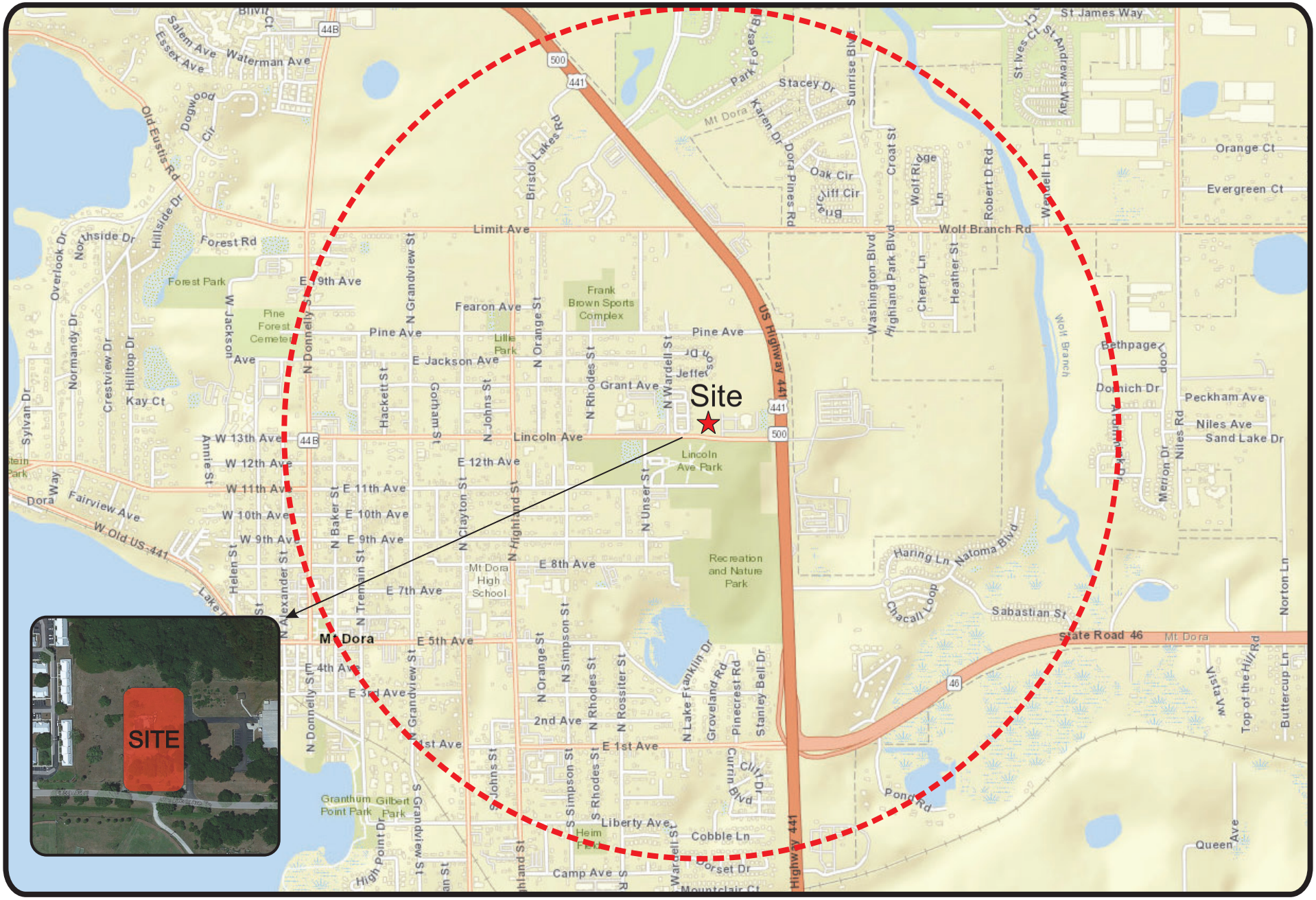

G3 Mini-Warehouse Development
Project № 5908
Figure 1

Site Location

N
NTS

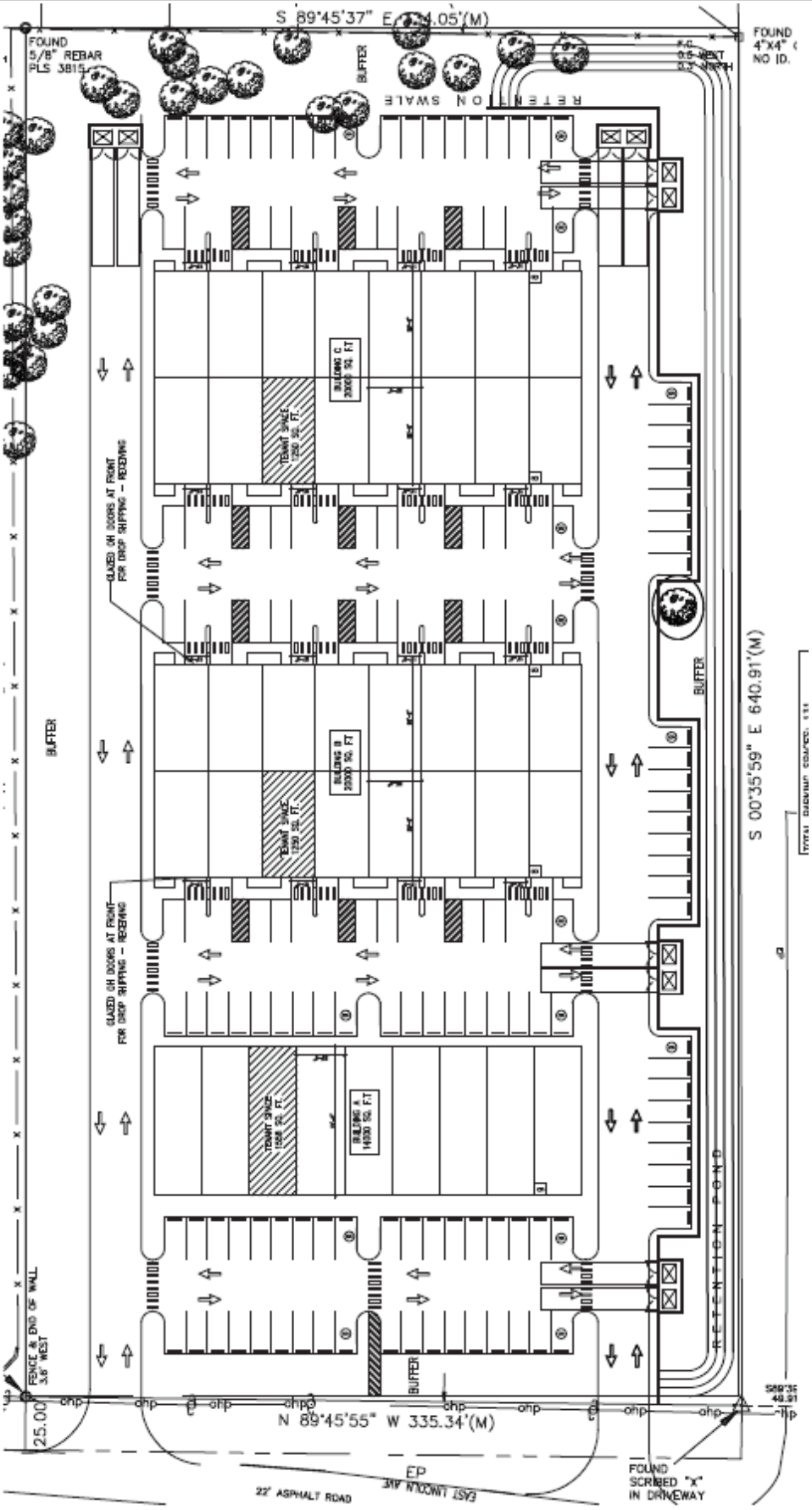

G3 Mini-Warehouse Development
Project № 5908
Figure 2

Site Plan

N
NTS

Conclusions

The proposed development consists of 54,000 square feet of mini-warehouse space which includes office space that serves the warehouse's daily operation. The proposed project's trip generation (78 daily, 5 A.M. and 8 P.M. new trips) is believed to have minimal impact on the roadway segments within the project's area of influence. As shown in **Table 2**, the project will consume less than 1% of the adjacent roadway capacity on Lincoln Avenue.

Roadway Segment	Lanes	Adopted (2-Way)		Project Trips		Significance
		LOS*	Capacity**	%	Volume	
Lincoln Ave						
US 441 to Donnelly St	2 LU	E	1,230	100%	8	0.65%

* Based on the City's Comprehensive Plan

** Based on FDOT's QLOS Tables. 2023 for area type C2

As documented herein, the adjacent roadway segment has ample capacity to accommodate the new trips generated by the proposed project. Therefore, an exemption from a Tier 1 Traffic Impact Analaysis is requested.

TURGUT DERVISH
LICENSE
No. 20400
STATE OF
FLORIDA
PROFESSIONAL ENGINEER

Attachment A

Trip Generation Information

Mini-Warehouse
(151)

Vehicle Trip Ends vs: 1000 Sq. Ft. GFA
On a: Weekday

Setting/Location: General Urban/Suburban
Number of Studies: 16
Avg. 1000 Sq. Ft. GFA: 55
Directional Distribution: 50% entering, 50% exiting

Vehicle Trip Generation per 1000 Sq. Ft. GFA

Average Rate	Range of Rates	Standard Deviation
1.45	0.38 - 3.25	0.92

Data Plot and Equation

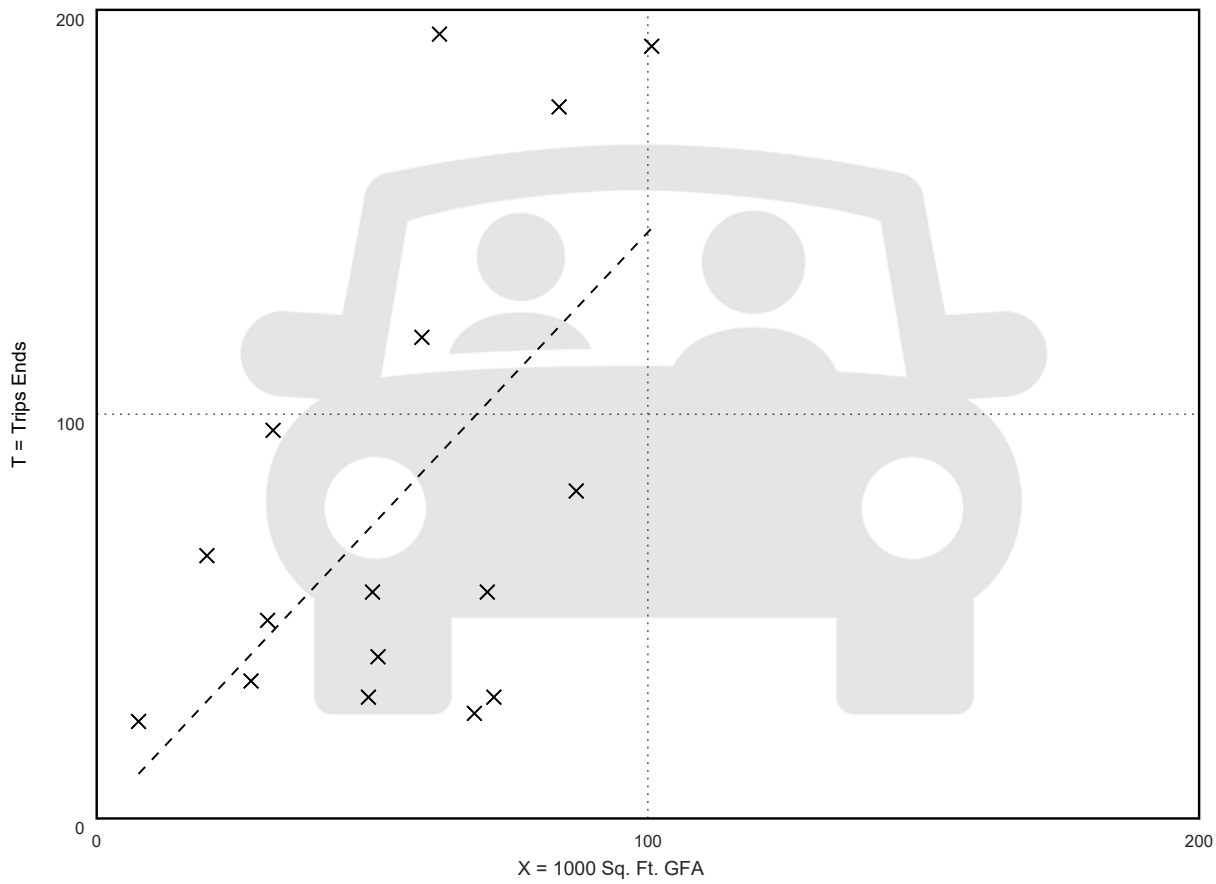

× **Study Site** ----- **Average Rate**

Fitted Curve Equation: Not Given **R^2= *****

Mini-Warehouse
(151)

Vehicle Trip Ends vs: 1000 Sq. Ft. GFA
On a: Weekday,
Peak Hour of Adjacent Street Traffic,
One Hour Between 7 and 9 a.m.
Setting/Location: General Urban/Suburban
Number of Studies: 13
Avg. 1000 Sq. Ft. GFA: 70
Directional Distribution: 59% entering, 41% exiting

Vehicle Trip Generation per 1000 Sq. Ft. GFA

Average Rate	Range of Rates	Standard Deviation
0.09	0.04 - 0.17	0.05

Data Plot and Equation

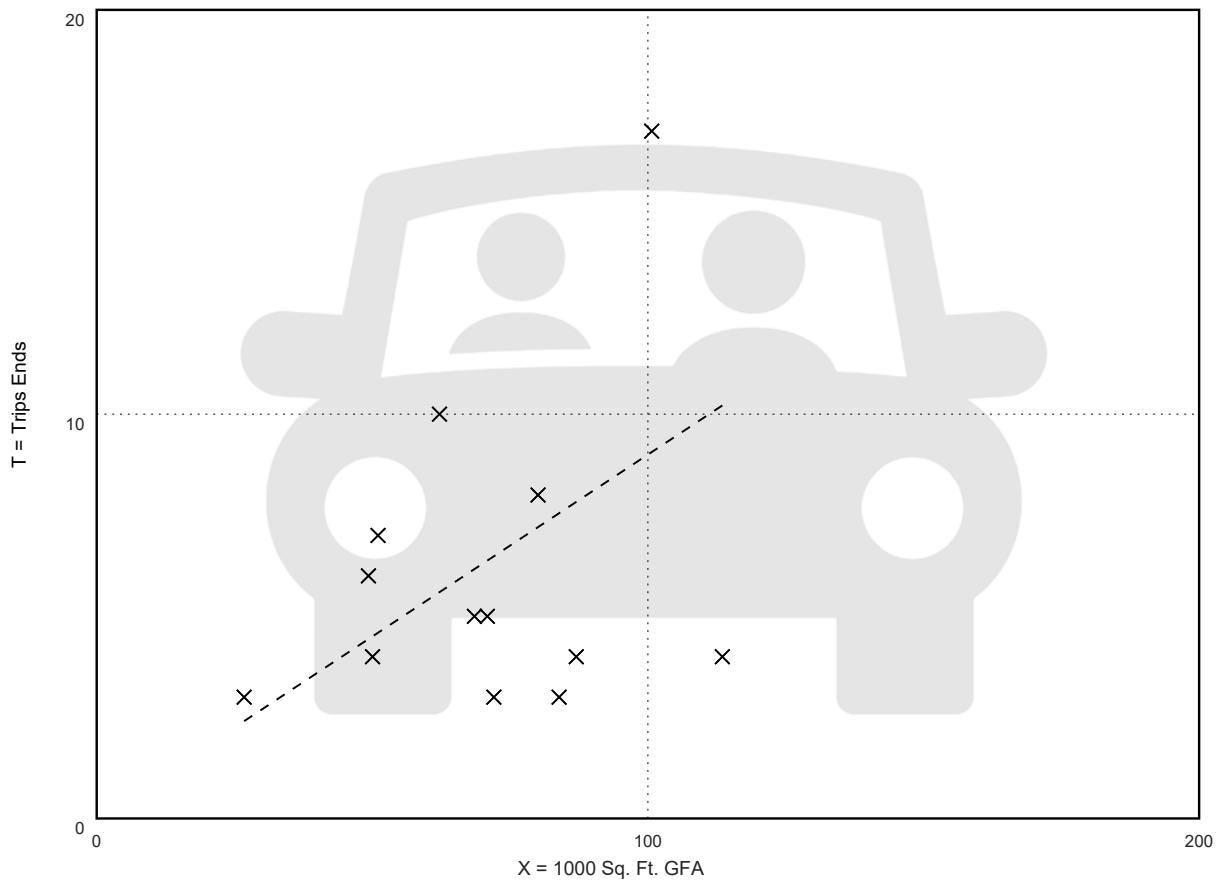

× **Study Site**

– – – – – **Average Rate**

Fitted Curve Equation: Not Given

R^2= ***

Mini-Warehouse
(151)

Vehicle Trip Ends vs: 1000 Sq. Ft. GFA
On a: Weekday,
Peak Hour of Adjacent Street Traffic,
One Hour Between 4 and 6 p.m.
Setting/Location: General Urban/Suburban
Number of Studies: 18
Avg. 1000 Sq. Ft. GFA: 59
Directional Distribution: 47% entering, 53% exiting

Vehicle Trip Generation per 1000 Sq. Ft. GFA

Average Rate	Range of Rates	Standard Deviation
0.15	0.02 - 0.64	0.14

Data Plot and Equation

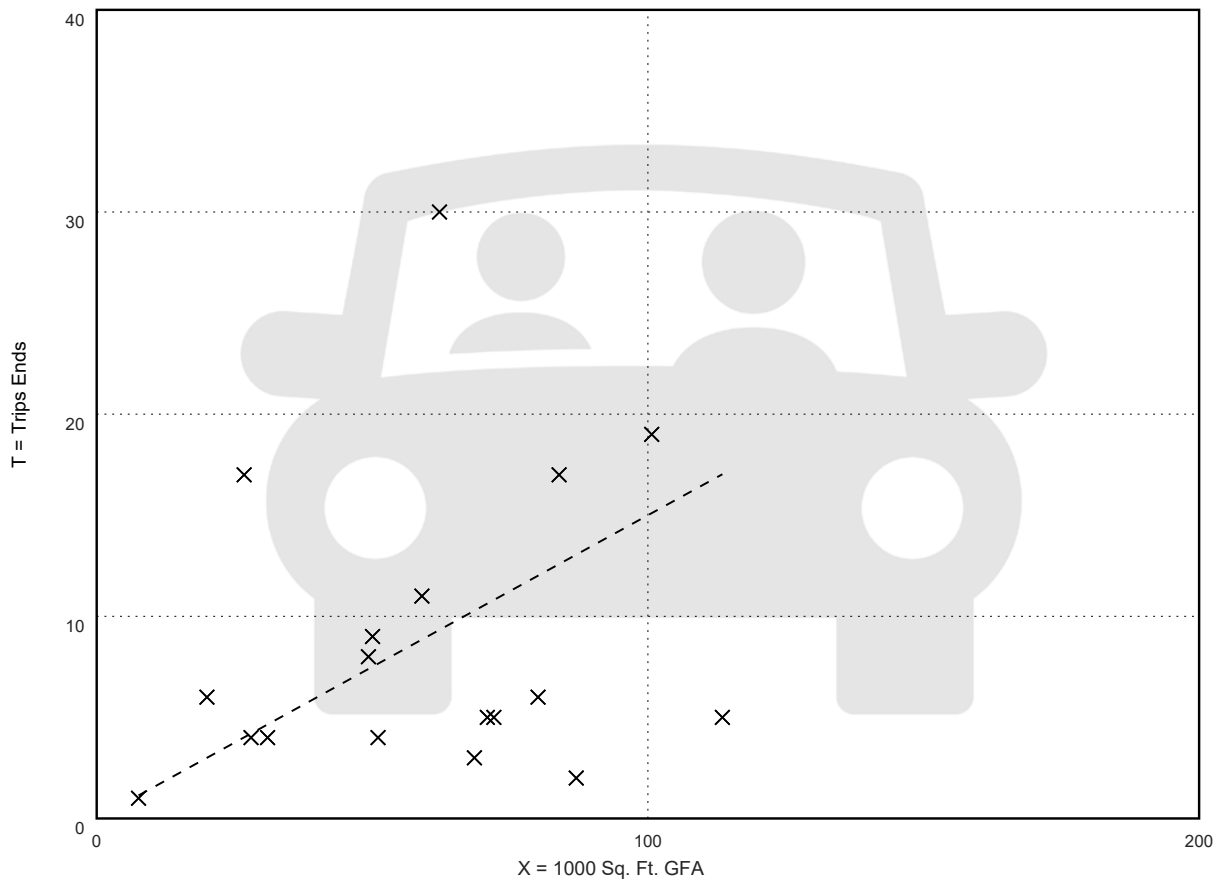

× **Study Site**

– – – – – **Average Rate**

Fitted Curve Equation: Not Given

R^2= ***

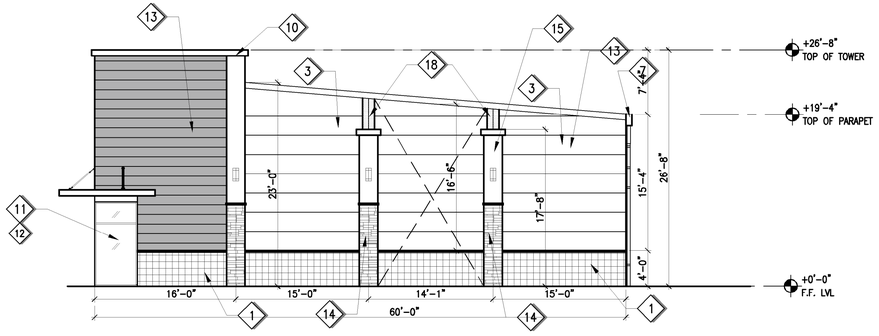

1 SIDE ELEVATION

SCALE: 1/8"=1'-0" BUILDING 1

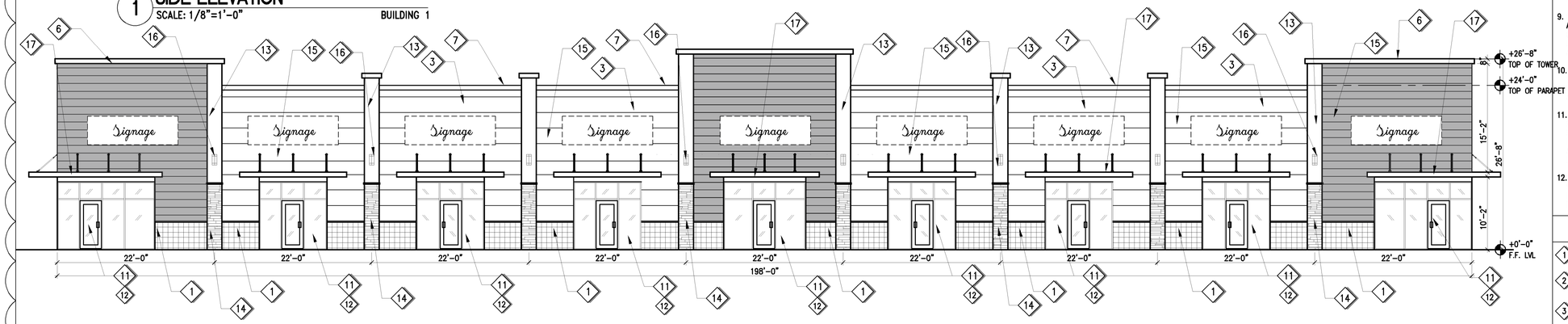

2 NORTH ELEVATION

SCALE: 1/8"=1'-0" BUILDING 1

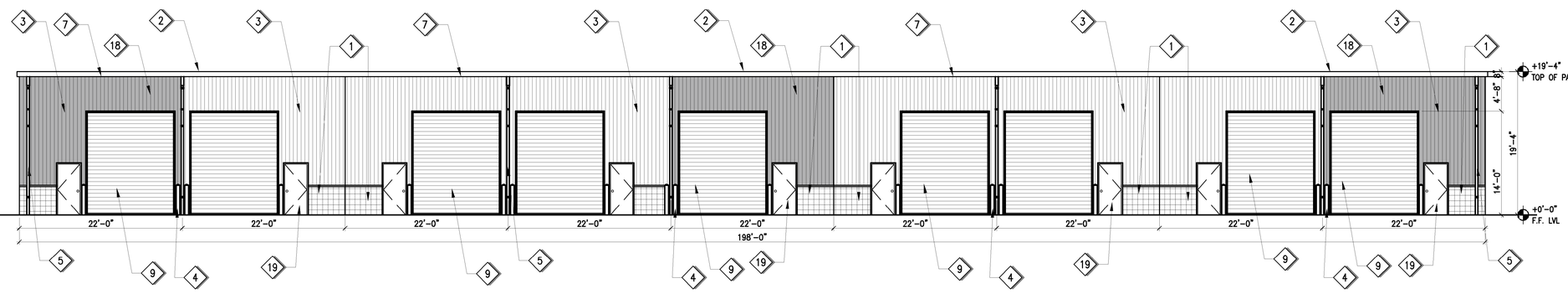

3 SOUTH ELEVATION

SCALE: 1/8"=1'-0" BUILDING 1

GENERAL NOTES

1. REFER TO SHEET COVER SHEET FOR ADDITIONAL GENERAL NOTES AND PROJECT DATA
2. ALL EXTERIOR STUCCO SURFACES SHALL BE WITH FINISHED TEXTURED STUCCO PAINTED PER OWNER'S SELECTION. ALL BANDING, TRIMS AND PROJECTION MOLDINGS SHALL BE SMOOTH FINISH PAINTED.
3. ALL STUCCO AND EXPOSED CMU WALLS SHALL RECEIVE AN ELASTOMERIC 18 MIL PAINT COATING MINIMUM. EXTERIOR PAINT SHALL INCLUDE M1 ADDITIVE TO PREVENT MILDEW AND FUNGUS GROWTH.
4. PAINT SHALL BE SHERWIN WILLIAMS AS PER SPECIFICATIONS WITH MIN. 10 YEAR CERTIFIED WARRANTY OR APPROVED EQUAL.
5. PROVIDE A CLEAR WATER PROOFING SEALER UPON FINAL COAT OR PRIOR TO PAINT APPLICATION AS RECOMMENDED BY PAINT MANUFACTURER IN MINIMUM THICKNESS TO ACHIEVE A COMPLETE 10 YEAR CERTIFIED WARRANTY OF FINISH APPLICATION
6. ALL METAL SURFACES SHALL BE PAINTED WITH ENAMEL BASE. SEE PAINT SPECIFICATIONS.
7. CONTRACTOR SHALL PROVIDE MANUFACTURER'S DATA CUT-SHEETS FOR ALL EXTERIOR LIGHT FIXTURES FOR APPROVAL BY ARCHITECT AND OWNER PRIOR TO PURCHASE AND INSTALLATION
8. CONTRACTOR SHALL PAINT ALL EXPOSED PIPES, CONDUCTS, DISCONNECTS & JUNCTION BOXES TO MATCH ADJACENT SURFACE WHERE THEY OCCUR AND ARE EXPOSED TO VIEW.
9. CONTRACTOR SHALL PROVIDE EVIDENCE FOR COMPLIANCE TO COMPONENTS AND CLADDING WIND RESISTANCE REQUIREMENTS BY PROVIDING A COPY OF NOTICE OF ACCEPTANCE FROM STATE OF FLORIDA AND OR ENGINEERED SHOP DRAWINGS FOR APPROVAL BY THE ARCHITECT AND COUNTY OFFICIALS PRIOR TO ORDERING AND CONSTRUCTION.
10. ELEVATION HEIGHTS ARE FOR REFERENCE ONLY TO THE ARCHITECTURAL DRAWINGS. SEE CIVIL PLANS AND SITE SURVEY DRAWINGS FOR ACTUAL FLOOR HEIGHT ABOVE SEA LEVEL. COORDINATE ELEVATION HEIGHTS WITH CIVIL DRAWINGS AND CONTACT ARCHITECT OF RECORD IF HEIGHTS DIFFER.
11. NO EXTERIOR WALL OR TENANT SIGNAGE IS INCLUDED IN THIS PACKAGE. ALL SIGNS MUST BE PERMITTED SEPARATELY BY A SIGN CONTRACTOR. CONTRACTOR SHALL PROVIDE ADEQUATE BACKING MATERIAL AND POWER JUNCTION BOX FOR FUTURE SIGN INSTALLATIONS. ALL BUILDING SIGNS SHALL BE COMPLIANT TO APPLICABLE CODE ORDINANCE. SIGN CONTRACTOR SHALL SUBIMT SHOP DRAWINGS FOR REVIEW AND APPROVAL. PRIOR TO INSTALLATIONS.
12. FURNISH AND INSTALL LOUVERS WHERE SHOWN ON HVAC PLANS – CENTERED IN SPACE PROVIDED WITH AESTHETIC CONSIDERATIONS. LOUVERS SHALL BE WIND DRIVEN RAIN RESISTANT STATIONARY TYPE WITH INSECT SCREEN. COORDINATE LOCATION AND INSTALLATION WITH MECHANICAL DRAWINGS.

KEYED NOTES

1. WAINSCOAT ELASTOMERIC COATING OVER CMU BLOCKS W/ SINGLE SCORING
2. PRE-FINISHED STANDING SEAM METAL ROOF SYSTEM BY STEEL BUILDING VENDER. INSTALL PER MFR RECOMMENDATIONS.
3. INSULATED PRE-FINISHED EXTERIOR METAL WALL PANEL OVER Z-GIRT BY STEEL BUILDING VENDOR AS AN INTEGRAL BUILDING PACKAGE.
4. 4' HIGH – 6" DIA. EXTRA STRONG GALVANISED STEEL PIPE BOLLARD FILLED W/ CONC. UNLESS NOTED OTHERWISE
5. 6"x6" DOWNSPOUTS, ATTACHED WITH U-CLIPS AT 32"O.C. CONNECTED TO COLLECTIVE DRAINAGE PIPE. COORDINATE WITH CIVIL DRAWINGS.
6. PRE-FORMED PRE-FINISHED (CLEAR ANODIZED) ALUMINUM PARAPET FLASHING AT TOP OF FRONT FACADE WALL AND RETURN.
7. PRE-FORMED PRE-FINISHED GALV. ALUMINUM GUTTER SYSTEM 6" X 6" CONT.
8. 3'-0" X 7'-0" ALUMINUM STOREFRONT DOORS WITH CLEAR GLAZING.
9. 2" INSULATED SECTIONAL SPRINGLESS ALUMINUM WITH VIEW GLASS OVERHEAD DOOR THERMACORE SECTIONAL STEEL DOOR – MODEL 592– WITH R-17.5 MIN. OR APPROVED EQUAL. PROVIDE LIFTMASTER COMMERCIAL GRADE DOOR OPERATOR FOR FRONT OVERHEAD DOORS. DOOR SIZE AND LOCATION AS SHOWN ON ELEVATION.
10. APRON AND TRIMS TO MATCH FRONT ELEVATION ELEMENTS. TYP.
11. PRE-FINISHED ALUMINUM STOREFRONT WINDOW SYSTEM BY KAWNEER OR APPROVED EQUAL. PROVIDE COMPLETE SYSTEM WITH PACKAGE HARDWARE AND SELF CLOSING DEVICES ON THE INSIDE. 10" HIGH ADA TOE PLATE REQUIRED AT DOORS.
12. *ALL EXTERIOR STOREFRONT SYSTEM GLAZING SHALL BE HIGH EFFICIENCY LOW-E DOUBLE LAYER 1/4" TEMPERED CLEAR GLAZING - TYPE 2009 "TRULITE" HAVING A U-FACTOR OF 0.29 AND SHGC OF 0.25 & VISIBLE LIGHT TRANSMITTANCE OF 70% OR APPROVED EQUAL. GLAZING SHALL WITHSTAND MAX WIND LOAD PER FBC 2017/140 MPH. CONTRACTOR TO SUPPLY GLASS SAMPLES & SPECS FOR OWNER/ARCHITECT APPROVAL PRIOR TO ORDERING. SEE WINDOW SCHEDULE FOR INFORMATION. *SEE GLAZING CALCULATION
13. ALL EXTERIOR SYNTHETIC STUCCO SYSTEM SHALL BE WITH FINISHED TEXTURED STUCCO. PAINT PER OWNER'S COLOR SELECTION OF PASTEL COLORS TO MATCH RENDERINGS. ALL BANDING, TRIMS, AND PROJECTION MOULDINGS SHALL BE SMOOTH FINISH PAINTED PER OWNER'S TRIM COLOR SELECTION. ALL COLORS SHALL BE TWO COATS OVER XP PRIMER LOXON OR ELASTOMERIC PAINT WITH 10YR WARRANTY.
14. ELDORADO STONE – OWNER SELECTED ARCHITECT APPROVED STACK STONE OR APPROVED EQUAL. APPLIED WITH MASTIC CEMENT TO AND MATCHING GROUT COLORS OVER STUCCO BROWN COAT AND INSTALLED PER MANUF. INSTRUCTIONS. STONEWORK RETURN TO SIDES WITH MATCHING CORNER BLOCKS.
15. ⅜" CONTINUOUS SCORING IN SYNTHETIC STUCCO SYSTEM WITH SAND FINISH FOR 6" HIGH CONT. BANDS. PAINT PER OWNER'S SELECTION OF PASTEL COLORS – EARTH TONES PER RENDERING APPROVED BY ARCHITECT.
16. BUILDING MOUNTED LIGHT FIXTURE – 10'-0" AFF. SEE ELEC DRAWINGS.
17. WALL MOUNTED PRE-ENGINEERED PRE-FINISHED METAL CANOPY WITH STANDING SEAM ROOF BY VENDOR (4)
18. ACCENT PAINT PER ARCHITECT / OWNER SELECTION
19. 3'-0" X 7'-0" METAL EXIT DOORS.

ARCHENICS
METRO ARCHITECTURE PARTNERSHIP, INC.
ARCHITECTURE PLANNING ENGINEERING PROJECT MANAGEMENT
5401 SOUTH KIRKMAN ROAD, STE 440, ORLANDO, FL 32819
(407) 354-4477 - EMAIL: ROBBY@ARCHENICS.COM - WWW.ARCHENICS.COM

METRO ARCHITECTURE PARTNERSHIP, INC. (DBA ARCHENICS) IS THE ARCHITECTURAL PROVIDER OF THESE DRAWINGS. PREPARED BY MAKING USE OF, DRAWING FROM THE PRODUCT PROVIDED BY THE CONSULTANTS, AND OTHER PARTIES. DOCUMENTS PREPARED BY MPP, INC. (DBA ARCHENICS) FOR THIS PROJECT, INCLUDE THE PRODUCT OF THE CONSULTANTS AND OTHER PARTIES. THESE DOCUMENTS PREPARED FOR THE CONTRACTED PROJECT, MAY INCLUDE, BUT NOT LIMITED TO, ARCHITECTURAL, STRUCTURAL, MECHANICAL, ELECTRICAL, PLUMBING, FIRE PROTECTION, CIVIL ENGINEERING, LANDSCAPE ARCHITECTURE, INTERIOR DESIGN, SPECIFICATIONS, AND OTHER DOCUMENTS. THESE DOCUMENTS ARE THE PROPERTY OF MPP, INC. (DBA ARCHENICS). ALL REPRODUCTIONS, COPIES OR OTHER USE OF THESE DOCUMENTS WITHOUT EXPRESS WRITTEN CONSENT OF MPP, INC. (DBA ARCHENICS) IS STRICTLY PROHIBITED.

© COPYRIGHT - ROBBY JOSHI, AIA

ROBBY R. JOSHI, RA, NCARB
LIC #AR-0017614

MT. DORA SMALL BAY
MINI WAREHOUSING
1649 LINCOLN AVE
MT. DORA, FLORIDA 32757
MINI WAREHOUSING FACILITIES

NO	DATE	DESCRIPTION
1	04/19/24	CITY COMMENTS
2	06/13/24	CITY COMMENTS
3	08/27/24	CITY COMMENTS
4	10/22/24	CITY COMMENTS

EXTERIOR ELEVATIONS

DRAWN	PP
DATE	02/29/24
PROJECT NO.	24-013

A-311

Thursday, November 7, 2024 11:28:52 AM
V:\PROJECTS\PROJECTS_2024\24-013-MT_DORA - SITE-DRG\02_CFG-DOCS\02-DESIGN_DEV\01 ARCH\A-311-Elevations.dwg

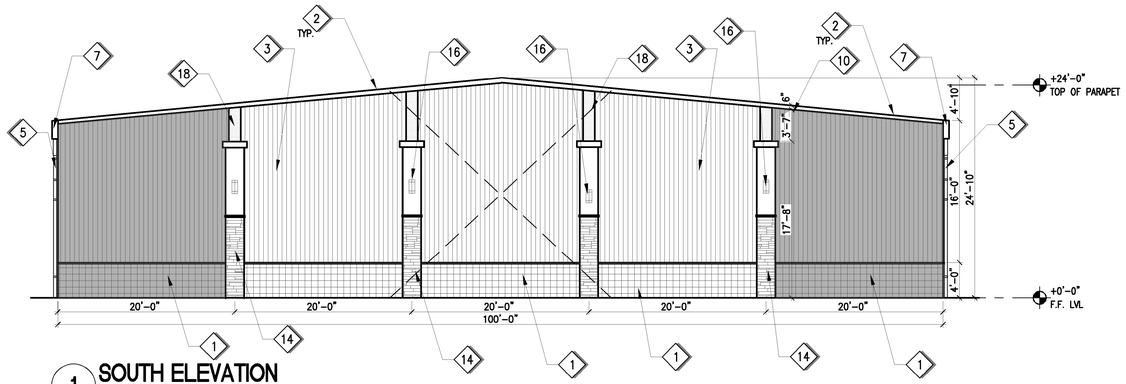

1 SOUTH ELEVATION
SCALE: 1/8"=1'-0"
BUILDING 2 AND 3

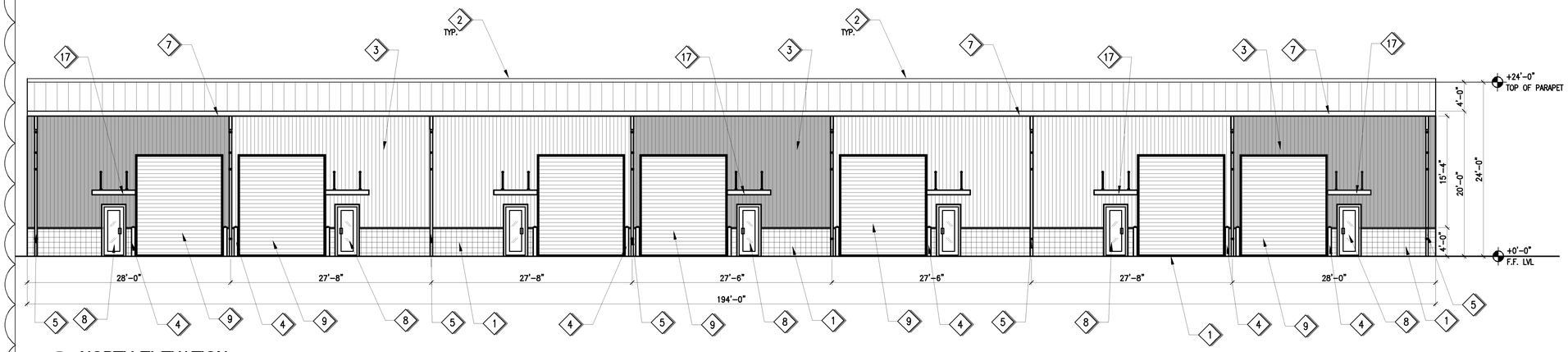

2 NORTH ELEVATION
SCALE: 1/8"=1'-0"
BILDING 2 AND 3

GENERAL NOTES

1. REFER TO SHEET COVER SHEET FOR ADDITIONAL GENERAL NOTES AND PROJECT DATA
2. ALL EXTERIOR STUCCO SURFACES SHALL BE WITH FINISHED TEXTURED STUCCO PAINTED PER OWNER'S SELECTION. ALL BANDING, TRIMS AND PROJECTION MOLDINGS SHALL BE SMOOTH FINISH PAINTED.
3. ALL STUCCO AND EXPOSED CMU WALLS SHALL RECEIVE AN ELASTOMERIC 18 MIL PAINT COATING MINIMUM. EXTERIOR PAINT SHALL INCLUDE M1 ADDITIVE TO PREVENT MILDEW AND FUNGUS GROWTH.
4. PAINT SHALL BE SHERWIN WILLIAMS AS PER SPECIFICATIONS WITH MIN. 10 YEAR CERTIFIED WARRANTY OR APPROVED EQUAL.
5. PROVIDE A CLEAR WATER PROOFING SEALER UPON FINAL COAT OR PRIOR TO PAINT APPLICATION AS RECOMMENDED BY PAINT MANUFACTURER IN MINIMUM THICKNESS TO ACHIEVE A COMPLETE 10 YEAR CERTIFIED WARRANTY OF FINISH APPLICATION
6. ALL METAL SURFACES SHALL BE PAINTED WITH ENAMEL BASE. SEE PAINT SPECIFICATIONS.
7. CONTRACTOR SHALL PROVIDE MANUFACTURER'S DATA CUT-SHEETS FOR ALL EXTERIOR LIGHT FIXTURES FOR APPROVAL BY ARCHITECT AND OWNER PRIOR TO PURCHASE AND INSTALLATION
8. CONTRACTOR SHALL PAINT ALL EXPOSED PIPES, CONDUCTS, DISCONNECTS & JUNCTION BOXES TO MATCH ADJACENT SURFACE WHERE THEY OCCUR AND ARE EXPOSED TO VIEW.
9. CONTRACTOR SHALL PROVIDE EVIDENCE FOR COMPLIANCE TO COMPONENTS AND CLADDING WIND RESISTANCE REQUIREMENTS BY PROVIDING A COPY OF NOTICE OF ACCEPTANCE FROM STATE OF FLORIDA AND OR ENGINEERED SHOP DRAWINGS FOR APPROVAL BY THE ARCHITECT AND COUNTY OFFICIALS PRIOR TO ORDERING AND CONSTRUCTION.
10. ELEVATION HEIGHTS ARE FOR REFERENCE ONLY TO THE ARCHITECTURAL DRAWINGS. SEE CIVIL PLANS AND SITE SURVEY DRAWINGS FOR ACTUAL FLOOR HEIGHT ABOVE SEA LEVEL. COORDINATE ELEVATION HEIGHTS WITH CIVIL DRAWINGS AND CONTACT ARCHITECT OF RECORD IF HEIGHTS DIFFER.
11. NO EXTERIOR WALL OR TENANT SIGNAGE IS INCLUDED IN THIS PACKAGE. ALL SIGNS MUST BE PERMITTED SEPARATELY BY A SIGN CONTRACTOR. CONTRACTOR SHALL PROVIDE ADEQUATE BACKING MATERIAL AND POWER JUNCTION BOX FOR FUTURE SIGN INSTALLATIONS. ALL BUILDING SIGNS SHALL BE COMPLIANT TO APPLICABLE CODE ORDINANCE. SIGN CONTRACTOR SHALL SUBMIT SHOP DRAWINGS FOR REVIEW AND APPROVAL. PRIOR TO INSTALLATIONS.
12. FURNISH AND INSTALL LOUVERS WHERE SHOWN ON HVAC PLANS – CENTERED IN SPACE PROVIDED WITH AESTHETIC CONSIDERATIONS. LOUVERS SHALL BE WIND DRIVEN RAIN RESISTANT STATIONARY TYPE WITH INSECT SCREEN. COORDINATE LOCATION AND INSTALLATION WITH MECHANICAL DRAWINGS.

KEYED NOTES

1. WAINSCOAT ELASTOMERIC COATING OVER CMU BLOCKS W/ SINGLE SCORING
2. PRE-FINISHED STANDING SEAM METAL ROOF SYSTEM BY STEEL BUILDING VENDER. INSTALL PER MFR RECOMMENDATIONS.
3. INSULATED PRE-FINISHED EXTERIOR METAL WALL PANEL OVER Z-GIRT BY STEEL BUILDING VENDOR AS AN INTEGRAL BUILDING PACKAGE.
4. 4" HIGH – 6" DIA. EXTRA STRONG GALVANISED STEEL PIPE BOLLARD FILLED W/ CONC. UNLESS NOTED OTHERWISE
5. 6"x6" DOWNSPOUTS, ATTACHED WITH U-CLIPS AT 32"O.C. CONNECTED TO COLLECTIVE DRAINAGE PIPE. COORDINATE WITH CIVIL DRAWINGS.
6. PRE-FORMED PRE-FINISHED (CLEAR ANODIZED) ALUMINUM PARAPET FLASHING AT TOP OF FRONT FACADE WALL AND RETURN.
7. PRE-FORMED PRE-FINISHED GALV. ALUMINUM GUTTER SYSTEM 6" X 6" CONT.
8. 3'-0" X 7'-0" ALUMINUM STOREFRONT DOORS WITH CLEAR GLAZING.
9. 2" INSULATED SECTIONAL SPRINGLESS ALUMINUM WITH VIEW GLASS OVERHEAD DOOR THERMACORE SECTIONAL STEEL DOOR – MODEL 592– WITH R-17.5 MIN. OR APPROVED EQUAL. PROVIDE LIFTMASTER COMMERCIAL GRADE DOOR OPERATOR FOR FRONT OVERHEAD DOORS. DOOR SIZE AND LOCATION AS SHOWN ON ELEVATION.
10. APRON AND TRIMS TO MATCH FRONT ELEVATION ELEMENTS. TYP.
11. PRE-FINISHED ALUMINUM STOREFRONT WINDOW SYSTEM BY KAWNEER OR APPROVED EQUAL. PROVIDE COMPLETE SYSTEM WITH PACKAGE HARDWARE AND SELF CLOSING DEVICES ON THE INSIDE. 10" HIGH ADA TOE PLATE REQUIRED AT DOORS.
12. *ALL EXTERIOR STOREFRONT SYSTEM GLAZING SHALL BE HIGH EFFICIENCY LOW-E DOUBLE LAYER 1/4" TEMPERED CLEAR GLAZING - TYPE 2009 "TRULITE" HAVING A U-FACTOR OF 0.29 AND SHGC OF 0.25 & VISIBLE LIGHT TRANSMITTANCE OF 70% OR APPROVED EQUAL. GLAZING SHALL WITHSTAND MAX WIND LOAD PER FBC 2017/140 MPH. CONTRACTOR TO SUPPLY GLASS SAMPLES & SPECS FOR OWNER/ARCHITECT APPROVAL PRIOR TO ORDERING. SEE WINDOW SCHEDULE FOR INFORMATION. *SEE GLAZING CALCULATION
13. ALL EXTERIOR SYNTHETIC STUCCO SYSTEM SHALL BE WITH FINISHED TEXTURED STUCCO. PAINT PER OWNER'S COLOR SELECTION OF PASTEL COLORS TO MATCH RENDERINGS. ALL BANDING, TRIMS, AND PROJECTION MOULDINGS SHALL BE SMOOTH FINISH PAINTED PER OWNER'S TRIM COLOR SELECTION. ALL COLORS SHALL BE TWO COATS OVER XP PRIMER LOXON OR ELASTOMERIC PAINT WITH 10YR WARRANTY.
14. ELDORADO STONE – OWNER SELECTED ARCHITECT APPROVED STACK STONE OR APPROVED EQUAL. APPLIED WITH MASTIC CEMENT TO AND MATCHING GROUT COLORS OVER STUCCO BROWN COAT AND INSTALLED PER MANUF. INSTRUCTIONS. STONEWORK RETURN TO SIDES WITH MATCHING CORNER BLOCKS.
15. 3/8" CONTINUOUS SCORING IN SYNTHETIC STUCCO SYSTEM WITH SAND FINISH FOR 6" HIGH CONT. BANDS. PAINT PER OWNER'S SELECTION OF PASTEL COLORS – EARTH TONES PER RENDERING APPROVED BY ARCHITECT.
16. BUILDING MOUNTED LIGHT FIXTURE – 10'-0" AFF. SEE ELEC DRAWINGS.
17. WALL MOUNTED PRE-ENGINEERED PRE-FINISHED METAL CANOPY WITH STANDING SEAM ROOF BY VENDOR
18. ACCENT PAINT PER ARCHITECT / OWNER SELECTION

ARCHENICS
METRO ARCHITECTURE PARTNERSHIP, INC.
ARCHITECTURE | PLANNING | ENGINEERING | PROJECT MANAGEMENT
5401 SOUTH KIRKMAN ROAD, STE 440, ORLANDO, FL 32819
(407) 354 4477 - EMAIL: ROBBY@ARCHENICS.COM - WWW.ARCHENICS.COM

METRO ARCHITECTURE PARTNERSHIP, INC. (ARCHENICS) OWNS THE INTELLECTUAL PROPERTY RIGHTS OF THESE DRAWINGS, PREPARED BY US, INCLUDING BUT NOT LIMITED TO THE PHYSICAL PRODUCTS OF THE DRAWINGS AND SPECIFICATIONS, WHETHER PATENTABLE OR NOT. THESE DOCUMENTS WERE PREPARED FOR THE PARTICULAR USE OF THE CLIENT NAMED IN THE AGREEMENT BETWEEN US AND THE CLIENT. THESE DOCUMENTS ARE NOT INTENDED OR REPRESENTED TO BE SUITABLE FOR REUSE BY THE CLIENT OR OTHERS ON EXTENSIONS OF THIS PROJECT OR ON ANY OTHER PROJECT. ANY USE, REUSE, ALTERATION AND OTHER INFRINGEMENT RIGHTS, INCLUDING BUT NOT LIMITED TO COPYRIGHT, PATENT, TRADE SECRET, TRADEMARK AND UNFAIR COMPETITION RIGHTS, IN THESE DOCUMENTS WITHOUT WRITTEN CONSENT OF METRO ARCHITECTURE PARTNERSHIP, INC. IS PROHIBITED.
© COPYRIGHT - ROBBY JOSHI, AIA

ROBBY R. JOSHI, RA, NCARB
LIC #AR-0017614

MT. DORA SMALL BAY
MINI WAREHOUSING
1649 LINCOLN AVE
MT. DORA, FLORIDA 32757

MINI WAREHOUSING FACILITIES

NO	DATE	DESCRIPTION
1	04/19/24	CITY COMMENTS
2	06/13/24	CITY COMMENTS
3	08/27/24	CITY COMMENTS
4	10/22/24	CITY COMMENTS

EXTERIOR ELEVATIONS

DRAWN	PP
DATE	02/29/24
PROJECT NO.	24-013

A-311.1

Thursday, November 7, 2024 11:29:40 AM
V:\PROJECTS\PROJECTS-2024\24-013-MT. DORA - SITE-DRC\02-GFC DOCS\02_DESIGN-DEV(D)-ARCH\A-311-Elevations.dwg

SHADED AREA INDICATES BUILDING FACADE WITH NO GLAZING (65.78%)

SHADED AREA INDICATES BUILDING FACADE WITH GLAZING (34.22%)

REQUIREMENT: 20% OF TOTAL WALL AREA OF THE FRONT FACADE INCLUDING ENTRANCE STOREFRONTS.

FIRST FLOOR FACADE AREA = 3750.67 SQ. FT. (100%)

BUILDING ENTRANCE DOOR + OVERHEAD DOOR = 167.2264 + 1116.1111 SQ. FT. = 1283.3375 (34.22%)

PROVIDED: 34.22% OF TOTAL WALL OF THE FRONT FACADE IS ENTRANCE STOREFRONT.

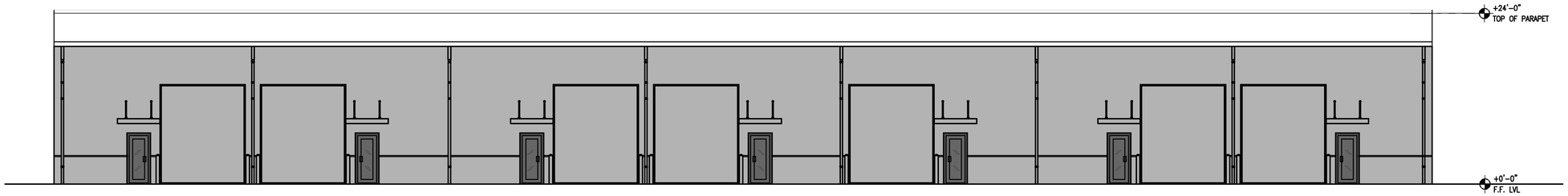

2 NORTH ELEVATION

SCALE: 1/8"=1'-0" BILDING 2 AND 3

SHADED AREA INDICATES BUILDING FACADE WITH NO GLAZING (74.13%)

SHADED AREA INDICATES BUILDING FACADE WITH GLAZING (25.87%)

REQUIREMENT: 20% OF TOTAL WALL AREA OF THE FRONT FACADE INCLUDING ENTRANCE STOREFRONTS.

FIRST FLOOR FACADE AREA = 4860.38 SQ. FT. (100%)

BUILDING ENTRANCE STOREFRONT = 974.2459 SQ. FT. (20.04%)

PROVIDED: 20.04% OF TOTAL WALL OF THE FRONT FACADE IS ENTRANCE STOREFRONT.

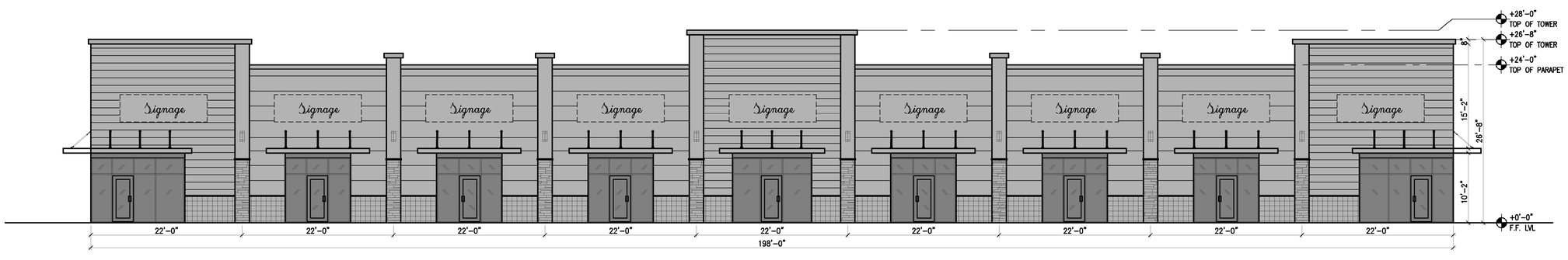

2 NORTH ELEVATION

SCALE: 1/8"=1'-0" BUILDING 1

MASTER PUD PLAN - AMENDMENT

ARCHENICS
METRO ARCHITECTURE PARTNERSHIP, INC.
ARCHITECTURE · PLANNING · ENGINEERING · PROJECT MANAGEMENT
5401 SOUTH KIRKMAN ROAD, STE 440, ORLANDO, FL 32819
(407) 354 4477 · EMAIL: ROBBY@ARCHENICS.COM · WWW.ARCHENICS.COM

METRO ARCHITECTURE PARTNERSHIP, INC. (ARCHENICS) IS THE ARCHITECTURAL ARCHITECT OF THIS DRAWING, PREPARED BY/AND AS DELIVERED BY/FOR THE PROJECT NOTED IN THIS DOCUMENT. NO OTHER DOCUMENTS, REPORTS, OR DRAWINGS PREPARED BY/FOR OTHERS ARE INTENDED TO BE, OR ARE, PART OF THIS DOCUMENT. THIS DOCUMENT, OR THE CONTENTS PROVIDED, MAY NOT BE REPRODUCED, DISTRIBUTED, OR OTHERWISE DISCLOSED WITHOUT WRITTEN CONSENT OF METRO ARCHITECTURE PARTNERSHIP, INC. (ARCHENICS). DOCUMENTS MAY NOT BE REPRODUCED IN ANY FORM OR BY ANY MEANS WITHOUT WRITTEN CONSENT OF ARCHENICS.

© COPYRIGHT - ROBBY JOSHI, AIA

ROBBY R. JOSHI, RA, NCARB
LIC #AR-0017614

MT. DORA SMALL BAY MINI WAREHOUSING
1649 LINCOLN AVE
MT. DORA, FLORIDA 32757

MINI WAREHOUSING FACILITIES

NO	DATE	DESCRIPTION
1	04/19/24	CITY COMMENTS
2	06/13/24	CITY COMMENTS
3	08/27/24	CITY COMMENTS
4	10/22/24	CITY COMMENTS

BLDG FACADE CALCULATION

DRAWN	PP
DATE	02/29/24
PROJECT NO.	24-013

A-312

Wednesday, November 6, 2024 3:00:46 PM
V:\PROJECTS\PROJECTS 2024\24-013-MT. DORA - SITE-DRC\02 GFC DOCS\02 DESIGN DEV\01 ARCH\A-311-Elevations.dwg

LANDSCAPE BUFFER

LANDSCAPE BUFFER REQUIREMENT			WIDTH		CANOPY TREES				UNDER-STORY TREES					SHRUBS
			REQUIRED	PROVIDED	REQUIRED	REQUIRED	EXISTING	PROVIDED	REQUIRED	REQUIRED	REQUIRED	EXISTING	PROVIDED	REQUIRED
BOUNDARY BUFFER	BOUNDARY TYPE	LINEAR FEET			3 PER 100 LINEAR FEET	4 PER 100 LINEAR FEET		3.5" CALIPER MINIMUM	5 PER 100 LINEAR FEET	5 PER 100 LINEAR FEET	6 PER 100 LINEAR FEET		1.5" CALIPER MINIMUM	HEDGE PLANTED 36" ON CENTER
1	b	335.34'	15'	25'	11			11		17			17	CONTINUOUS HEDGE
2	a	411.40'	10'	20'	13			13	21				21	CONTINUOUS HEDGE
3	B	229.51'	30'	30'		10	1	9	12			0	12	CONTINUOUS HEDGE
4	C	334.05'	40'	40'		14	15	0			21	0	21	6' WALL & CONTINUOUS HEDGE
5	B	271.56'	30'	30'		11	12	0			17	0	17	CONTINUOUS HEDGE
6	B	369.36'	30'	30'		15	0	15	19				19	CONTINUOUS HEDGE
TOTAL:					24	50	28	48	52	17	38	0	107	

LANDSCAPE BUFFERS:
BUFFER 1: TYPE (B) 15' WIDTH 3 CANOPY / 10 UNDERSTORY / CONTINUOUS HEDGE
BUFFER 2: TYPE (A) 10' WIDTH 3 CANOPY / 5 UNDERSTORY / CONTINUOUS HEDGE
BUFFER 3: TYPE B 30' WIDTH 4 CANOPY / 5 UNDERSTORY / CONTINUOUS HEDGE
BUFFER 4: TYPE C 40' WIDTH 4 CANOPY / 6 UNDERSTORY / 6' WALL & CONTINUOUS HEDGE
BUFFER 5: TYPE B 30' WIDTH 4 CANOPY / 5 UNDERSTORY / CONTINUOUS HEDGE
BUFFER 6: TYPE B 30' WIDTH 4 CANOPY / 5 UNDERSTORY / CONTINUOUS HEDGE

ALL PLANTINGS ARE TO BE FLORIDA #1 OR BETTER.

- TOTAL EXISTING NUMBER OF TREES SIZED 6" – 23.99": 46
- TOTAL EXISTING NUMBER OF TREES SIZED 6" – 23.99" REMOVED: 24
- TOTAL EXISTING NUMBER OF TREES SIZED 24" OR GREATER: 9
- TOTAL EXISTING NUMBER OF TREES SIZED 24" OR GREATER REMOVED: 3
- TOTAL NUMBER OF TREES REPLACED AT RATIO 1:1 FOR TREES REMOVED 6"–23.99": 24
- TOTAL NUMBER OF TREES PLACED AT RATIO 1:6 (FOR TREES REMOVED 24" OR GREATER): 18 REQ. 29 PROVIDED
- TOTAL NUMBER OF TREES REPLACED: 42(18 + 24)REQ. – (62 NEW CANOPY TREES PROVIDED)
- TOTAL NUMBER OF TREE DEFICIENT (NOT BEING REPLACED) FOR TREE BANK:

CONTRIBUTION AND INCLUDES TOTAL DOLLAR AMOUNT OF CONTRIBUTION FUNDS: $ 0.00

LANDSCAPE NOTES

1. CALIPER IS MEASURED SIX (6) INCHES ABOVE THE GROUND
2. SHRUBS TO BE 3' WITHIN 12 MONTHS. HEDGES TO FORM CONTINUOUS BUFFER UPON PLANTING.
3. ALL PLANTS ARE TO BE FLORIDA #1 OR BETTER.
4. ALL PLANTS ARE FLORIDA FRIENDLY. AN AUTOMATIC IRRIGATION SYSTEM WILL BE PROVIDED FOR ALL LANDSCAPED AREAS, INCLUDING A RAIN SENSOR SHUTOFF DEVICE.
5. ALL LAWN AREAS TO BE BAHIA SOD.
6. ALL ISLANDS ARE TO BE PLANTED WITH 100% SHRUBS / GROUND COVERS BUFFERS 3 & 5 WILL UTILIZE EXISTING VEGETATION FOR PHASE 1.
7. NEW VEGETATION TO MEET THE STANDARDS SHOWN WILL BE INSTALLED WITH PHASE 2.

PLANT LEGEND

PLANT LIST

SYM	BOTANICAL	QTY.	COMMON	SPECIFICATIONS
TREES				
CANOPY TREES				
	QUERCUS VIRGINIANA	28	LIVE OAK	12'; 4" CAL.
	MAGNOLIA GRANDIFLORA	17	'MAJESTIC BEAUTY' SOUTHERN MAGNOLIA	12'; 4" CAL.
	ACER RUBRUM	17	RED MAPLE	12'; 4" CAL.
UNDER-STORY TREES				
	LAGERSTROEMIA INDICA	47	CREPE MYRTLE	6' HIGH 1.5" CALIPER
	MAGNOLIA GRANDIFLORA "LITTLE GEM"	35	LITTLE GEM DWARF SOUTHERN MAGNOLIA	6' HIGH 1.5" CALIPER
	IIEX CASSINE	34	DAHOON HOLLY	6' HIGH 1.5" CALIPER
SHRUBS & GROUND COVER				
	VIBURNUM SUSPENSUM	1280	SANDANKWA VIBURNUM	30" HIGH @ PLANTING, 30" O.C.
	PODOCARPUS MACROPHYLLUS	39	PODOCARPUS	36" HT X 18–24" SPR. , 30" OC
	DIANELLA TASMANICA	679	FLAX LILY	1'–3' HT, 1.5'–3' SPREAD, 2' OC
	CODIGEUM VARIEGATUM	632	CROTONS	2'–6' HT, 1.5'–3' SPREAD, 2' OC
EXISTING				
	EXISTING TREES (QUERCUS VIRGINIANA)	30	LIVE OAK	SEE SURVEY FOR TREE NUMBERS AND SIZE
	EXISTING TREES (PINUS TAEDA L.)	2	LOBLOLLY PINE	SEE SURVEY FOR TREE NUMBERS AND SIZE
	EXISTING TREES (CINNAMOMUM CAMPHORA)	4	CAMPHOR	SEE SURVEY FOR TREE NUMBERS AND SIZE
	EXISTING TREES (PRUNUS SEROTINA)	1	CHERRY	SEE SURVEY FOR TREE NUMBERS AND SIZE
	EXISTING TREES (SABAL PALMETTO)	1	SABAL PALM	SEE SURVEY FOR TREE NUMBERS AND SIZE

GENERAL NOTES

A. ALL PLANTS TO BE FLORIDA NO. 1, OR BETTER AS OUTLINED UNDER 'GRADES AND STANDARDS FOR NURSERY PLANTS, PART I, 1963 AND PART II, STATE OF FLORIDA DEPARTMENT OF AGRICULTURE, TALLAHASSEE, FLORIDA, AND ANY AMENDMENTS THERETO.

B. ALL TREES AND PLANT MATERIAL SHALL BE PLANTED IN ACCORDANCE WITH THE SPECIFICATIONS DESCRIBED IN THE STATE DEPARTMENT OF AGRICULTURE AND CONSUMER SERVICES, DIVISION OF FORESTRY, "TREE PROTECTION MANUAL FOR BUILDERS AND DEVELOPERS", OCTOBER, 1980.

C. THE LANDSCAPE CONTRACTOR (CONTRACTED BY OWNER, N.I.C.) SHALL BE RESPONSIBLE FOR ALL MATERIALS AND ALL WORK AS CALLED FOR ON THE LANDSCAPE PLANS. THE LIST OF PLANT QUANTITIES ACCOMPANYING THE PLANS SHALL BE USED AS A GUIDE ONLY. IF A VARIATION OCCURS BETWEEN THE PLANS AND THE PLANT LIST, THE PLANS SHALL CONTROL.

D. ALL TREES, SHRUBS AND GROUND COVERS SHALL BE PLANTED USING A SOIL MIXTURE PREPARED ACCORDINGLY (2/3 EXISTING SOIL, 1/3 PEAT).

E. THE LANDSCAPE CONTRACTOR SHALL INSURE ADEQUATE VERTICAL DRAINAGE IN ALL PLANT BEDS AND PLANTERS. VERTICAL DRILLING THROUGH ANY COMPACTED FILL TO NATIVE SOIL SHALL BE ACCOMPLISHED TO AID DRAINAGE.

F. ALL PLANT BEDS AND TREE WATERING BASINS SHALL BE TOP DRESSED WITH THREE INCHES (3") OF PINE BARK MULCH.

G. NO TREES SHALL BE PLANTED CLOSER THAN 3 FEET (3') FROM THE EDGE OF PAVEMENT TO ALLOW ADEQUATE TREE TRUNK PROTECTION.

H. LANDSCAPE CONTRACTOR SHALL BE WHOLLY RESPONSIBLE FOR STABILITY AND PLUMB CONDITION OF ALL TREES AND SHALL BE LEGALLY LIABLE FOR ANY DAMAGE CAUSED BY THE INSTABILITY OF ANY PLANT MATERIAL.

I. ALL LAWN AREAS TO RECEIVE SOD SHALL BE DISKED FOUR(4) TO SIX(6) INCHES AND DRAGGED TO ESTABLISH A LEVEL FINISH GRADE. ALL DEBRIS TO BE REMOVED FROM THE SITE.

J. SOD SHALL BE FREE OF WEEDS AND PESTS. IT SHALL BE LAID EVENLY AND ROLLED, WITH TIGHT FITTING JOINTS. THE SOD SHALL CONTAIN MOIST SOIL WHICH DOES NOT FALL APART OR TEAR WHEN LIFTED. ALL AREAS NOT PAVED OR OTHERWISE LANDSCAPED SHALL BE SODDED. SOD SHALL BE ARGENTINE BAHIA OR EQUAL.

K. DIRECT SPRAY HEADS AWAY FROM ANY NATURAL AREAS AND PAVED SURFACES.

L. THE TREE CALIPER OF ALL TREES SPECIFIED ON THE PLANT LIST SHALL BE MEASURED AT SIX (6) INCHES ABOVE GRADE.

M. ALL LANDSCAPE AREAS TO BE IRRIGATED WITH AN AUTOMATIC UNDERGROUND SYSTEM, WITH 100% COVERAGE. BACKFLOW PREVENTOR, & RAIN SENSOR DEVICE PER CITY OF MOUNT DORA IRRIGATION REQUIREMENTS IRRIGATION SYSTEM PIPE, VALVE BOXES, SPRAY HEADS SHALL BE PURPLE.

N. IRRIGATION CONTRACTOR TO USE DRIP IRRIGATION ON SHRUBS AND TREES & PROVIDE IRRIGATION PLANS TO CITY FOR APPROVAL.

O. ALL PLANT AND TREES MATERIAL SHALL BE PLANTED IN COMPLIANCE WITH THE CITY OF MOUNT DORA LDC REQUIREMENTS FOR LANDSCAPING.

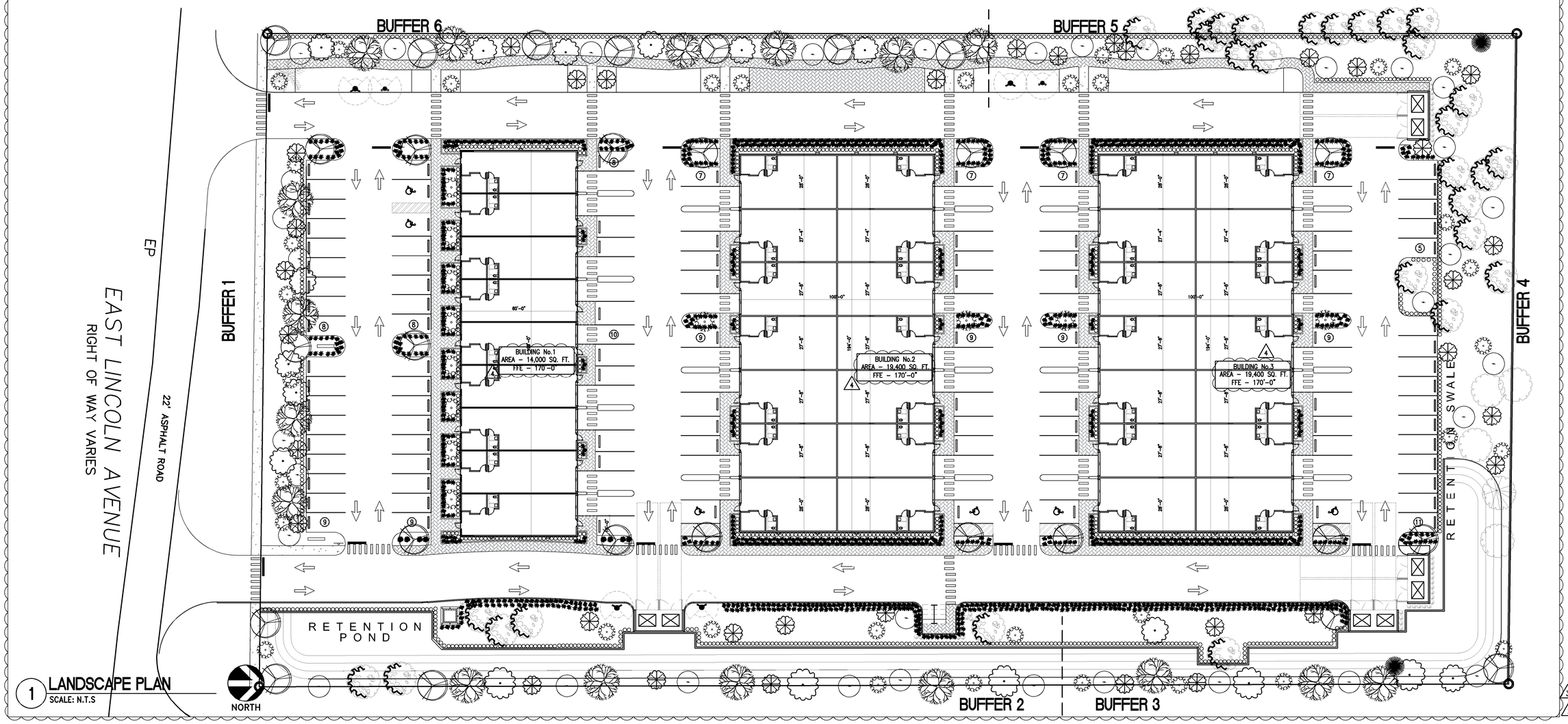

1 LANDSCAPE PLAN
SCALE: N.T.S

ARCHENICS
METRO ARCHITECTURE PARTNERSHIP, INC.
ARCHITECTURE · PLANNING · ENGINEERING · PROJECT MANAGEMENT
5401 SOUTH KIRKMAN ROAD, STE 440, ORLANDO, FL 32819
(407) 354-4477 - EMAIL: ROBBY@ARCHENICS.COM WWW.ARCHENICS.COM

© COPYRIGHT - ROBBY JOSHI, AIA

ROBBY R. JOSHI, RA, NCARB
LIC #AR-0017614

MT. DORA SMALL BAY
MINI WAREHOUSING
1649 LINCOLN AVE
MT. DORA, FLORIDA 32757
MINI WAREHOUSING FACILITIES

NO	DATE	DESCRIPTION
1	04/19/24	CITY COMMENTS
2	06/13/24	CITY COMMENTS
3	08/27/24	CITY COMMENTS
4	10/22/24	CITY COMMENTS

LANSCAPE PLAN

DRAWN	PP
DATE	02/29/24
PROJECT NO.	24-013

A-411

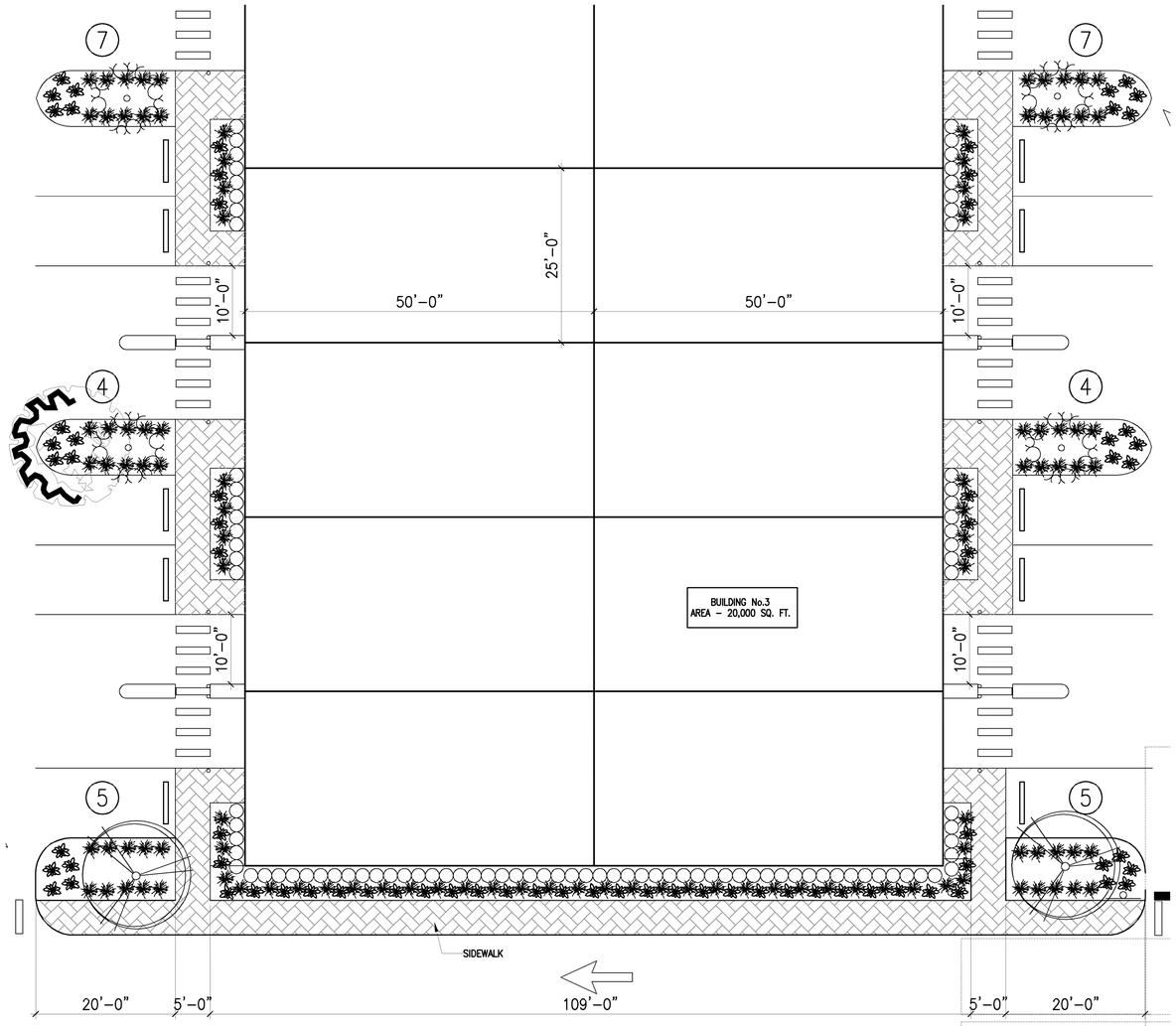

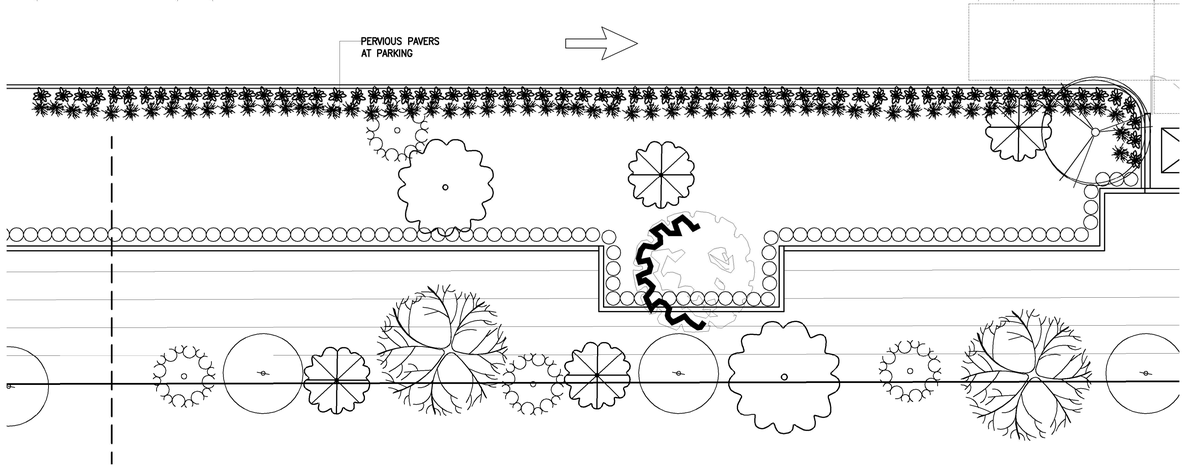

1 ENLARGED LANDSCAPE PLAN
SCALE: N.T.S

NORTH

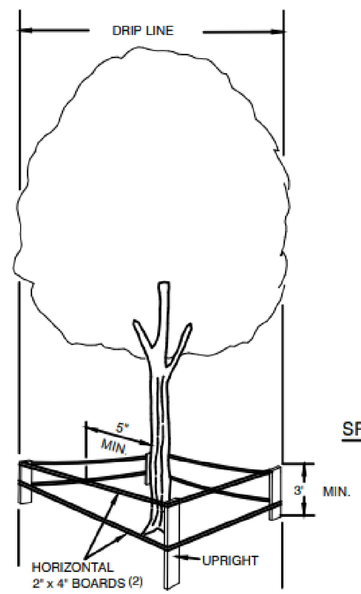

WHY A BARRIER?

1. TO PROTECT ALL ABOVE GROUND PORTIONS
2. TO PROTECT SOIL NEAR TREE FROM COMPACTION
3. PROVIDES PHYSICAL AND MENTAL AWARENESS OF TREES' PRESENCE TO EQUIPMENT OPERATORS

WHY IT WORKS

1. NO HEAVY EQUIPMENT ALLOWED INSIDE BARRIER, ONLY HAND LABOR
2. NO CONSTRUCTION MATERIALS OR TEMPORARY SOIL DEPOSITS ALLOWED INSIDE THIS AREA

BY OBSERVING THESE TWO SIMPLE PRINCIPLES, A TREES' CHANCE FOR SURVIVAL IS GREATLY ENHANCED

SPECIFICATIONS FOR WOOD BARRIER

1. MINIMUM RADIUS TO BE PROTECTED IS ENTIRE DRIP LINE
2. MINIMUM 3' IN HEIGHT
3. UPRIGHTS- THE EQUIVALENT OF 2"x4" LUMBER ON 6' MINIMUM CENTERS
4. HORIZONTAL- THE EQUIVALENT OF TWO COURSES OF 2" x 4" LUMBER PAINTED SAFETY YELLOW
5. BARRIERS TO BE ERECTED AROUND TREES TO REMAIN BEFORE CONSTRUCTION OR NEARBY TREES ARE REMOVED
6. BARRIERS TO REMAIN IN PLACE UNTIL ALL PAVING, CONSTRUCTION AND HEAVY EQUIPMENT IS OUT OF AREA

NOTE:
BARRIER MUST BE ERECTED PRIOR TO CONSTRUCTION

MOUNT DORA, FLORIDA

TREE PROTECTION MEASURES

GU0023-1
ISSUED: 2017
REVISED: – 2019

2 TREE PROTECTION DETAIL - CITRY OF MT. DORA
SCALE: N.T.S

MASTER PUD PLAN - AMENDMENT

ARCHENICS
METRO ARCHITECTURE PARTNERSHIP, INC.
ARCHITECTURE · PLANNING · ENGINEERING · PROJECT MANAGEMENT
5401 SOUTH KIRKMAN ROAD, STE 440, ORLANDO, FL 32819
(407) 354-1477 · EMAIL: ROBBY@ARCHENICS.COM · WWW.ARCHENICS.COM

METRO ARCHITECTURE PARTNERSHIP, INC. OWNS ALL THE INTELLECTUAL PROPERTY OWNER OF THESE DRAWINGS, DESIGNS AND SPECIFICATIONS. THESE DOCUMENTS ARE INTENDED FOR USE ONLY WITH THE PROJECT FOR WHICH THEY WERE PREPARED BY METRO ARCHITECTURE PARTNERSHIP, INC. THESE DOCUMENTS, INCLUDING BUT NOT LIMITED TO THE PROJECT MANUALS, PLANS, SPECIFICATIONS, DESIGNS, SAMPLES, STUDIES, DRAWINGS, DOCUMENTS, FILE, ELECTRONIC FILES, OR COMPUTER PROGRAMS, SHALL NOT BE USED BY OTHERS ON OTHER PROJECTS, FOR ADDITIONS TO THIS PROJECT, OR FOR COMPLETION OF THIS PROJECT BY OTHERS, EXCEPT BY AGREEMENT IN WRITING AND WITH APPROPRIATE COMPENSATION TO METRO ARCHITECTURE PARTNERSHIP, INC. ALL REPRODUCTIONS OF THESE DOCUMENTS, INCLUDING BUT NOT LIMITED TO ELECTRONIC COPIES, MUST INCLUDE A COPYRIGHT NOTICE IN THE FOLLOWING FORMAT: "THESE DOCUMENTS WERE PREPARED BY METRO ARCHITECTURE PARTNERSHIP, INC. AND ARE SUBJECT TO THE INTELLECTUAL PROPERTY RIGHTS OF METRO ARCHITECTURE PARTNERSHIP, INC."
© COPYRIGHT - ROBBY JOSHI, AIA

ROBBY R. JOSHI, RA, NCARB
LIC #AR-0017614

MT. DORA SMALL BAY
MINI WAREHOUSING
1649 LINCOLN AVE
MT. DORA, FLORIDA 32757
MINI WAREHOUSING FACILITIES

NO	DATE	DESCRIPTION
1	04/19/24	CITY COMMENTS
2	06/13/24	CITY COMMENTS
3	08/27/24	CITY COMMENTS

LANSCAPE DETAILS

DRAWN	PP
DATE	02/29/24
PROJECT NO.	24-013

A-412

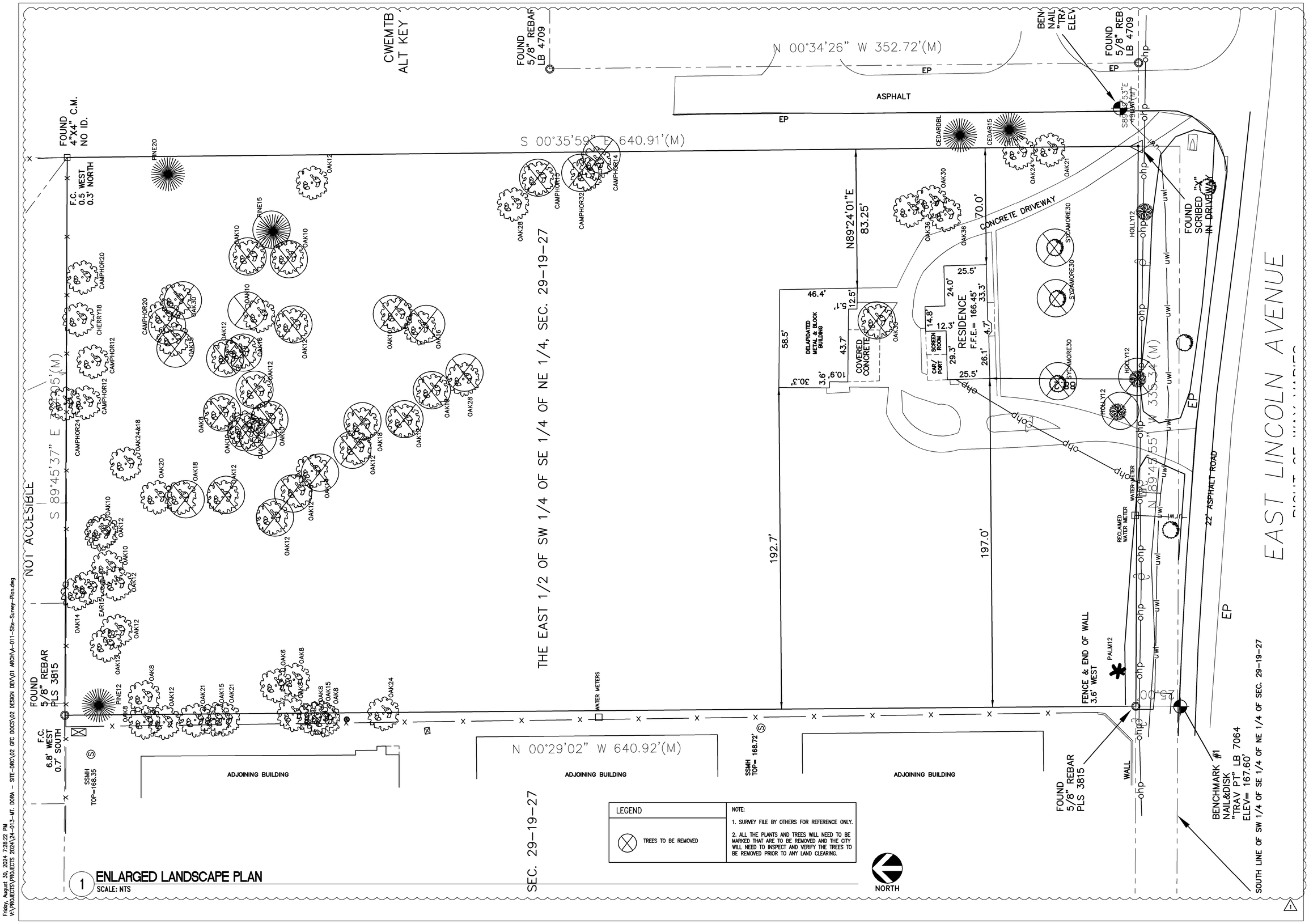

LEGEND	
⊗ TREES TO BE REMOVED	NOTE: 1. SURVEY FILE BY OTHERS FOR REFERENCE ONLY. 2. ALL THE PLANTS AND TREES WILL NEED TO BE MARKED THAT ARE TO BE REMOVED AND THE CITY WILL NEED TO INSPECT AND VERIFY THE TREES TO BE REMOVED PRIOR TO ANY LAND CLEARING.

1 ENLARGED LANDSCAPE PLAN
SCALE: NTS

Friday, August 30, 2024 7:20:22 PM
W:\PROJECTS\PROJECTS 2024\24-013-MT. DORA - SITE-DRC\02 GFC DOCS\02 DESIGN DEV\01 ARCH\A-011-Site-Survey-Plan.dwg

ARCHENICS
METRO ARCHITECTURE PARTNERSHIP, INC.
ARCHITECTURE · PLANNING · ENGINEERING · PROJECT MANAGEMENT
5401 SOUTH KIRKMAN ROAD, STE 440, ORLANDO, FL 32819
(407) 354 4477 · EMAIL: ROBBY@ARCHENICS.COM · WWW.ARCHENICS.COM

METRO ARCHITECTURE PARTNERSHIP, INC. OWNS THE ARCHITECTURAL PROPERTY RIGHTS, COPYRIGHTS, PATENTS AND OTHER INTELLECTUAL PROPERTY RIGHTS IN THE DOCUMENTS, MODELS AND OTHER DOCUMENTS PREPARED BY US AND REGARDLESS OF WHETHER THE PROJECT DESCRIBED IN THE DOCUMENTS IS EXECUTED OR BUILT, THE DOCUMENTS AND OTHER INTELLECTUAL PROPERTY RIGHTS REMAIN OUR PROPERTY. THE DOCUMENTS MAY NOT BE USED FOR ANY PURPOSE NOT AGREED TO IN WRITING BY US. THIS INCLUDES THE COPYRIGHT IN SECTION 102 OF TITLE 17 FOR WORKS, A PROTECTABLE SUBJECT MATTER, IN THIS DOCUMENT.
© COPYRIGHT - ROBBY JOSHI, AIA

ROBBY R. JOSHI, RA, NCARB
LIC #AR-0017614

MT. DORA SMALL BAY
MINI WAREHOUSING
1649 LINCOLN AVE
MT. DORA, FLORIDA 32757
MINI WAREHOUSING FACILITIES

NO	DATE	DESCRIPTION
1	04/19/24	CITY COMMENTS
2	06/13/24	CITY COMMENTS
3	08/27/24	CITY COMMENTS

ENLARGED LANDSCAPE/ TREE DEMO. PLAN

DRAWN	PP
DATE	02/29/24
PROJECT NO.	24-013

A-012

GENERAL NOTES

1. AS PER CITY OF MOUNT DORA LDC 6.4.3.: SEPTIC TANKS ARE NOT PERMITTED. THEREFORE, THIS DEVELOPMENT DOES NOT PROPOSE TO USE SEPTIC TANKS.
2. AS PER LETTER DATED AUGUST 16, 2024, CITY OF MOUNT DORA HAS STATED: THE CITY OF MOUNT DORA DOES NOT HAVE WASTEWATER TREATMENT CAPACITY AT WWTP#2 TO SERVE NEW DEVELOPMENTS OR SUBJECT DEVELOPMENT – CURRENTLY, CENTRAL SEWER SYSTEM FACILITIES ARE NOT AVAILABLE TO THE DEVELOPER AND SAID DEVELOPMENT. CITY RECOMMENDS FILING FOR CAPACITY RESERVATION VIA A CONCURRENCY APPLICATION PROCESS. DEVELOPER/OWNER AGREES TO FILE CONCURRENCY APPLICATION TO RESERVE CAPACITY WHEN CENTRAL SEWER FACILITY ARE MADE AVAILABLE.
3. AS PER LETTER DATED AUGUST 16, 2024, CITY OF MOUNT DORA HAS STATED: THE CITY IS REVIEWING OPTIONS TO INCREASE WASTEWATER TREATMENT CAPACITY AND IMPLEMENT OTHER FACILITY IMPROVEMENTS – INDICATING THAT CENTRAL SEWER FACILITY WILL BE AVAILABLE IN FUTURE.
4. AS PER CITY OF MOUNT DORA LDC 6.4.2.: APPLICANTS FOR DEVELOPMENT IN AREAS NOT ACCESSIBLE TO EXISTING SEWER SYSTEMS SHALL CONSTRUCT AND DEDICATE A DRY LINE SYSTEM TO THE CITY AND SUBMIT A PLAN FOR FUTURE TIE-IN TO THE APPROPRIATE AREA-WIDE SYSTEM, INCLUDING METHOD OF FINANCING THE TIE-IN. PROJECT PLANS INDICATE SUCH INTENT TO FUTURE TIE-IN FOR THE ENTIRE DEVELOPMENT WHEN CENTRAL SEWER FACILITIES ARE MADE AVAILABLE TO THE DEVELOPMENT
5. FINAL SITE CIVIL ENGINEERING PLANS SHALL PROVIDE FOR A DRY-LINE FOR FUTURE CONNECTION TO CITY OF MT. DORA'S CENTRAL SEWER FACILITY.

NOTE:

THERE ARE NO RECORDS OF THE EXISTING SANITARY LINE OR EASEMENTS GRANTED. UPON CONSTRUCTION PERMIT, SITE CONTRACTOR SHALL BE REQUIRED TO CALL "SUNSHINE 811" 'CALL BEFORE YOU DIG' AND LOCATE THESE SAID SANITARY LINE OR A FORCE MAIN. A DRAWING INDICATING THESE EXISTING SANITARY LINES OR A FORCE MAIN SHALL THEN BE SUBMITTED AS A REVISED UTILITY PLAN AND NEW ROUTINGS OF SUCH SANITARY LINES SHALL THEN BE PROVIDED TO THE CITY AND UPON APPROVAL FOR THE RELOCATED ROUTING OF THE EXISTING SANITARY LINE, AN EASEMENT SHALL BE RECORDED TO ALLOW FUTURE MAINTENANCE. WE ESTIMATE THAT THE NEW SANITARY LINE SHALL RUN UNDER THE SIDEWALK ALONG SOUTHERN PROPERTY LINE OR JUST INSIDE ALONG THE PROPERTY LINE AND ALONG THE WESTERN PROPERTY LINE TO EXISTING POINTS OF CONNECTION AND MAINTAIN THE CURRENT POINT OF CONNECTION.

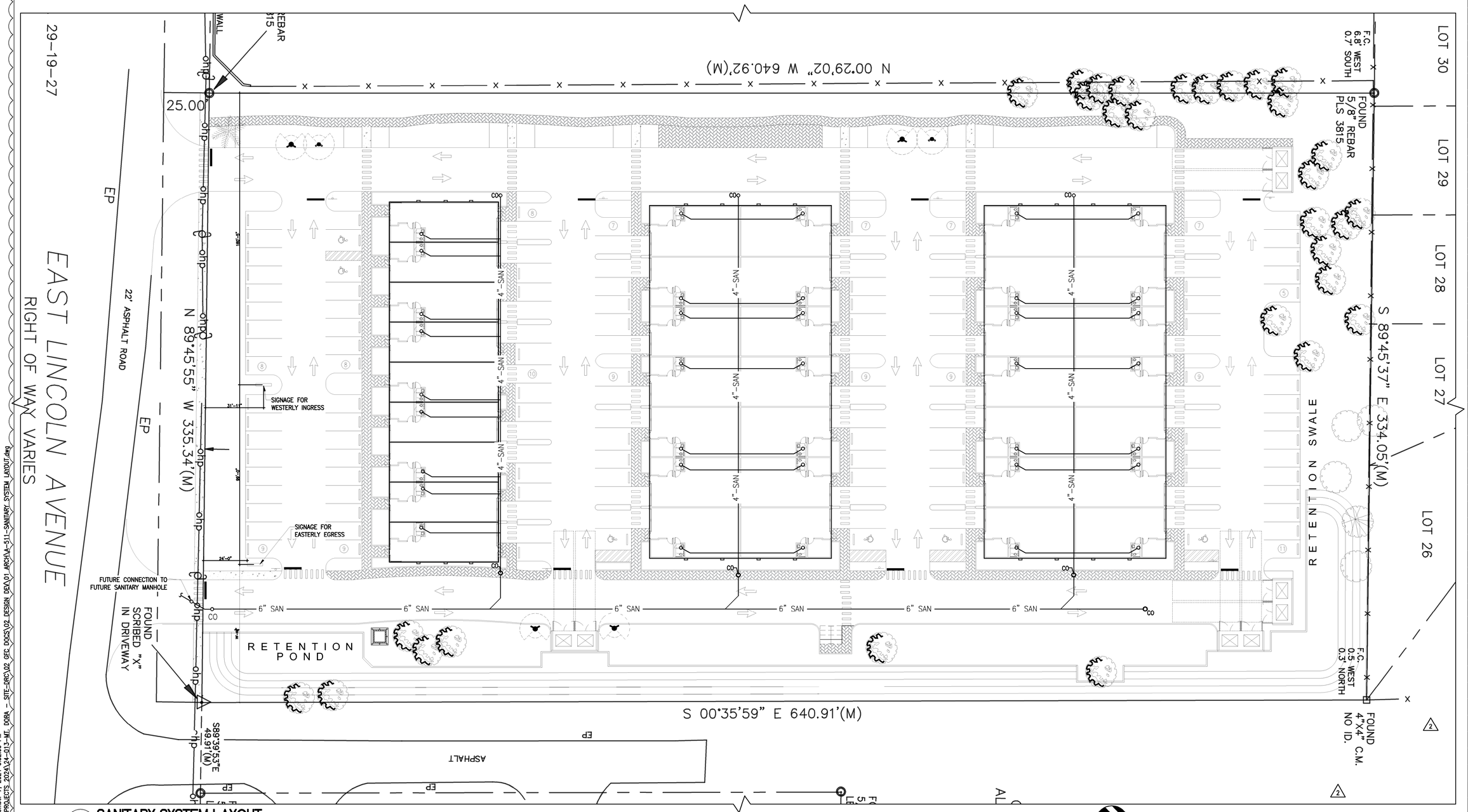

1 SANITARY SYSTEM LAYOUT
SCALE: 1/25" = 1'-0"

Thursday, November 7, 2024 3:52:05 PM
V:\PROJECTS\PROJECTS_2024\24-013_MT. DORA - SITE-DRC\02 SFC DGSS\02 DESIGN DRA\01 ARCH\A-511-SANITARY SYSTEM LAYOUT.dwg

ARCHENICS
METRO ARCHITECTURE PARTNERSHIP, INC.
ARCHITECTURE · PLANNING · ENGINEERING · PROJECT MANAGEMENT
5401 SOUTH KIRKMAN ROAD, STE 440, ORLANDO, FL 32819
(407) 354-1477 · EMAIL: ROBB@ARCHENICS.COM · WWW.ARCHENICS.COM

METRO ARCHITECTURE PARTNERSHIP, INC. OWNS ALL INTELLECTUAL PROPERTY OVER THESE DRAWINGS, PLANS, SPECIFICATIONS, DESIGNS, ARRANGEMENTS AND OTHER WORK PRODUCT, WHETHER PRINTED OR WRITTEN, PREPARED BY OR FOR METRO ARCHITECTURE PARTNERSHIP, INC. ("DOCUMENTS"). NO RIGHTS TO THESE DOCUMENTS ARE GIVEN OR TRANSFERRED TO ANY PERSON OR ENTITY OTHER THAN METRO ARCHITECTURE PARTNERSHIP, INC. THE DOCUMENTS, OR THE PROJECT TO WHICH THE DOCUMENTS PERTAIN, MAY NOT BE REPRODUCED, ALTERED, OR STORED, OR DISCLOSED TO ANY THIRD PARTIES WITHOUT THE WRITTEN PERMISSION OF METRO ARCHITECTURE PARTNERSHIP, INC. UNAUTHORIZED USE OF THE DOCUMENTS WITHOUT PRIOR WRITTEN PERMISSION IS PROHIBITED AND WILL BE PROSECUTED TO THE FULLEST EXTENT OF THE LAW.
© COPYRIGHT - ROBBY JOSHI, AIA

ROBBY R. JOSHI, RA, NCARB
LIC #AR-0017614

MT. DORA SMALL BAY MINI WAREHOUSING
1649 LINCOLN AVE
MT. DORA, FLORIDA 32757

MINI WAREHOUSING FACILITIES

NO	DATE	DESCRIPTION
1	04/19/24	CITY COMMENTS
2	06/13/24	CITY COMMENTS
3	08/27/24	CITY COMMENTS
4	10/22/24	CITY COMMENTS

SANITARY SYSTEM LAYOUT

DRAWN	PP
DATE	02/29/24
PROJECT NO.	24-013

A-511

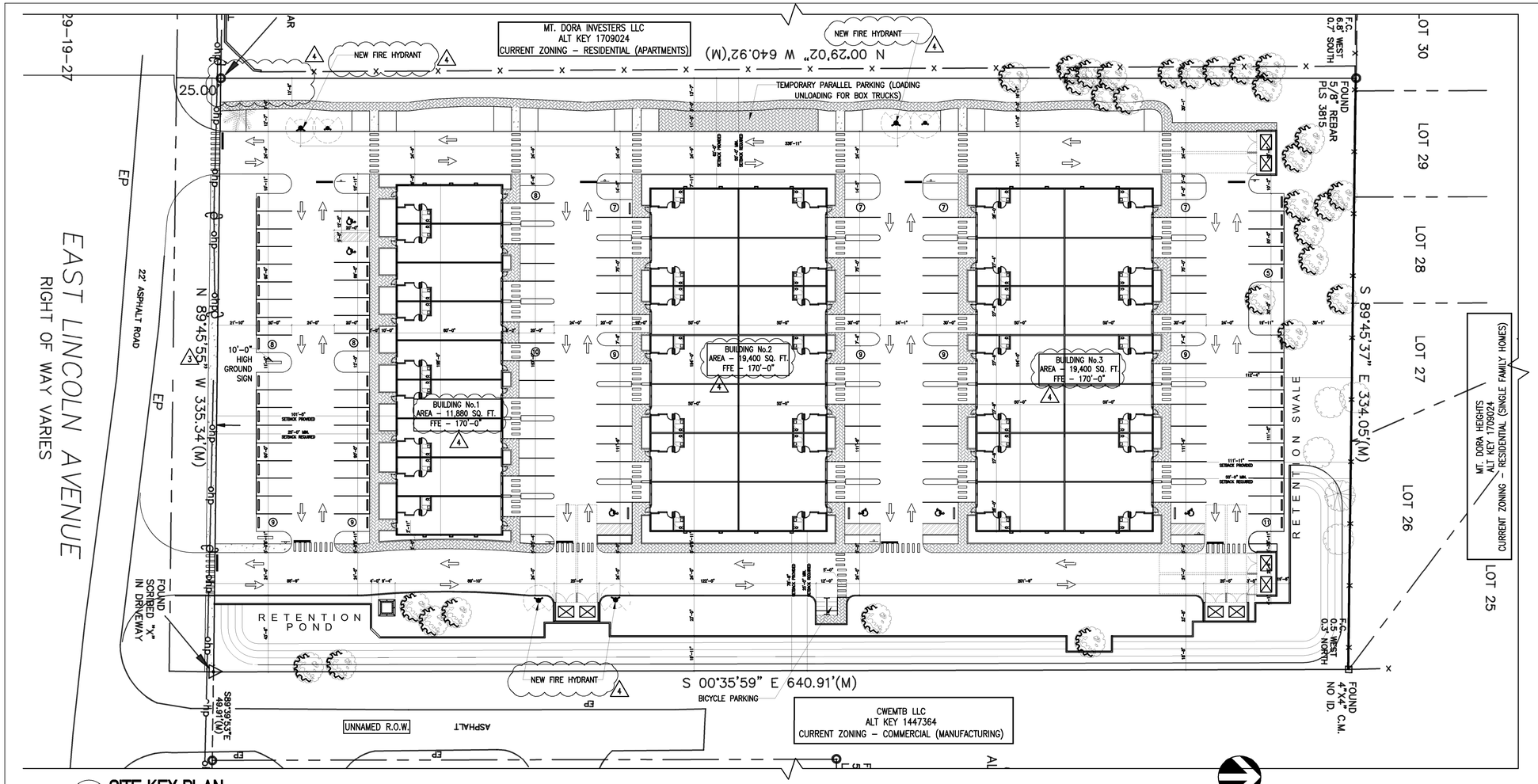

1 SITE KEY PLAN

SCALE: 1/32" = 1'-0"

LEGENDS

	PERVIOUS PAVERS TO ALLOW PERLOCATION. GC SHALL CONSULT ARCHITECT/OWNER FOR THE SECIFICATIONS.
	CONCRETE SIDEWALK
	CROSSWALK

1. PROJECT NAME: MT DORA SMALL BAY FLEX SPACE WAREHOUSING

2. OWNER / DEVELOPER
LINCOLN 1649 LLC – Mr. Mike Vedder
24019 GREEN GARDEN CT
EUSTIS, FL 32736
PHONE: 352-729-6749

3. TOTAL SITE AREA:
Total PUD: 4.92 AC (214,492.59 Sq. Ft.)

EXISTING FUTURE LAND USE: HIGH DENSITY RESIDENTIAL

PROPOSED USES: MINI WAREHOUSING (BUILDING 1, 2 & 3) 1

4. MAXIMUM FLOOR AREA RATIO: 0.35 (75,072.41 Square Feet)
PROPOSED FLOOR AREA RATIO: 0.236 (50,680.00 Square Feet)
TOTAL BUILDING AREA PROPOSED: 50,680 SQ. FT.

BUILDING No.1 = 11,880 Sq. Ft.
BUILDING No.2 = 19,400 Sq. Ft.
BUILDING No.3 = 19,400 Sq. Ft. 3 2

5. IMPERVIOUS SURFACE AREA ALLOWED: 0.65
Total PUD: 4.92 AC x 0.65 = 3.198 AC (139,304.88 Sq. Ft.)

IMPERVIOUS SURFACE AREA PROPOSED: 0.64860
Total PUD: 3.14 AC (136,802.9422 Sq. Ft.) / 4.92 AC = 0.63833 ~ 63.83%

PERVIOUS SURFACE AREA PROPOSED: 0.35339
Total PUD: 1.73 AC (79,604.4603 Sq. Ft.) / 4.92 AC = 0.3711 ~ 37.11%

6. MAXIMUM BUILDING HEIGHT: 35'

PROPOSED BUILDING HEIGHT: 28'-0"

7. BUILDING MINIMUM SETBACKS AND PROVIDED INDICATED AFTER '–'

MINIMUM REQUIRED	PROVIDED
NORTH: 50'-0"	NORTH– 111'-11"
EAST: 25'-0"	EAST– 78'-8"
SOUTH: 25'-0"	SOUTH– 101'-5"
WEST: 50'-0"	WEST– 62'-0"

4

8. ARCHITECTURAL DESIGN CRITERIA:
SUBJECT TO LDC SECTION 6.13 COMMERCIAL ARCHITECTURAL AND SITE DESIGN REQUIREMENTS

9. LIGHTING:
SEE SITE LIGHTING AND PHOTOMETRIC STUDY DRAWINGS ATTACHED

10. WETLANDS:
THERE ARE NO WETLAND WITHIN THE PROJECT SITE AREA. IF WETLANDS ARE IDENTIFIED DURING SITE DEVELOPMENT, THE SITE PLAN MAY NEED TO BE MODIFIED TO PROVIDE THE APPROPRIATE WETLAND BUFFERS. 4

11. DEVELOPABLE AREA:
Total PUD: 4.92 AC

12. THE EXISTING SITE CONTAINS
Single Family Home 3

13. REQUIRED OPEN SPACE: 0.35 (+/– 5% ALLOWABLE)
Total PUD: 4.92 AC x 0.35 = 1.72 AC (75,072.41 Sq. Ft.) = 0.35000 ~ 35.00%

PROPOSED OPEN SPACE: 0.3583
Total PUD: 1.80 AC (86,147.8549 Sq. Ft.) / 4.92 AC = 0.4016 ~ 40.16% 4

14. DEVELOPMENT REVIEW
ALL SITE DEVELOPMENT AND REVIEW PROCEDURES SHALL FOLLOW THE CITY'S MINIMUM STANDARDS AND PROCEDURES UNLESS OTHERWISE CONTAINED IN THE PUD.

15. UTILITIES
WATER/SEWER/RE-USE WILL BE PROVIDED BY THE CITY OF MOUNT DORA IF AVAILABLE AND CONSTRUCTED BY THE OWNER TO STANDARDS AS CONTAINED IN THE LAND DEVELOPMENT REGULATIONS AND CONSISTENT LDC AS AMENDED. 1

16. TREE REPLACEMENT
WILL FOLLOW THE REQUIREMENTS OF THE LAND DEVELOPMENT REGULATIONS.

17. CANOPY TREES
ALL REPLACEMENT CANOPY TREES WILL BE 3.5" CALIPER AND 15' IN HEIGHT.
ALL REMAINING CANOPY TREES WILL BE 2.5" CALIPER AND 8' IN HEIGHT.

18. TRAFFIC
SEE TRAFFIC STUDY REPORT PREPARED BY TRAFFIC PLANNING AND DESIGN INC., REPORT DATED FEBRUARY 29, 2024.
A TIER 2 TRAFFIC STUDY WILL BE PROVIDED AS REQUIRED DURING SITE PLAN APPLICATION. 4

19. FIRE PREVENTION
ALL BUILDINGS WILL BE IN FULL COMPLIANCE WITH THE 2024 8TH EDITION OF FLORIDA FIRE PREVENTION CODE. FIRE PROTECTION SYSTEM MAINS ON PRIVATE PROPERTY SHALL MEET THE REQUIREMENTS AND SHALL BE INSTALLED PER NFPA 24, STANDARD FOR THE INSTALLATION OF PRIVATE FIRE SERVICE MAINS AND THEIR APPURTENANCES AND/OR NFPA 13, STANDARD FOR THE INSTALLATION OF SPRINKLER SYSTEMS AS ADOPTED IN THE FLORIDA FIRE PREVENTION CODE. 5

20. SIGNAGE

PUD SIGNAGE IS TO FOLLOW ZONING DISTRICT REGULATIONS WP-1 ZONING DISTRICT COMPLIANT TO MOUNT DORA LDC CH VI-6.7ESIGN STANDARDS-SIGNS. 2

21. REQUIRED PARKING

Total PARKING REQUIRED : 102 Spaces REQUIRED – 1 SPACE PER 500 SQ. FT.
TOTAL PARKING PROVIDED: 132 (32 SPACES AT BAY DOORS USED BY TENANT AS PARKING)
TOTAL 6-HC SPACES HAVE BEEN PROVIDED (5 HC SPACES ARE REQUIRED)
TEMPORARY LOADING/UNLOADING ZONE – PROVIDED –1 SPACE

BICYCLE PARKING:
REQUIRED – 6 SPACES
PROVIDED – 8 SPACES 1 4

22. FLOOD ZONE

FLOOD ZONE X PER FEMA F.I.R.M. PANEL NO. 12069C 0367 E, DATED DECEMBER 18, 2012.

23. SOILS

TAVARES SAND – 0-5% SLOPE (QUICK PERCOLATION) – SEE DETAILED GEOTECH REPORT ATTACHED

24. HAZARDOUS MATERIALS STATEMENT

DURING CONSTRUCTION, WHEN COMBUSTIBLES ARE BROUGHT ONTO THE SITE IN SUCH QUANTITIES AS DEEMED HAZARDOUS BY THE FIRE OFFICIAL, ACCESS ROADS AND A SUITABLE TEMPORARY SUPPLY OF WATER ACCEPTABLE TO THE FIRE DEPARTMENT SHALL BE PROVIDED AND MAINTAINED.

25. DUMPSTER NOTE

THE DUMPSTER SHALL HAVE OPAQUE AND THE WALL SHALL HAVE A DECORATIVE CONCRETE CAP WALL SHALL BE ARCHITECTURALLY COMPATIBLE MATERIAL TO THE PRINCIPLE BUILDING.

26. FLAG POLE NOTE

FLAG POLE CONSTRUCTION SHALL COMPLY WITH MOUNT DORA LDC.

27. SITE LIGHTING AND PHOTOMETRIC STUDIES: 2

PROPOSED PLAN SHALL COMPLY WITH DARK SKY LIGHTING PRINCIPLES WITH ADEQUATE LIGHT DEFLECTORS AND DEFLECTOR SHIELDS. ALL HVAC EQUIPMENT AND HOT WATER HEATER SHALL BE ENERGY STAR COMPLIANT. ALL LIGHT FIXTURES AND SITE LIGHTING SHALL BE LED AND COMPLY WITH FLORIDA ENERGY EFFICIENCY REQUIREMENTS.

3

28. SITE PLAN NOTES:

1. SITE PLAN APPLICATION: A SITE PLAN APPLICATION WILL BE SUBMITTED TO THE OFFICE OF PLANNING AND ZONING TO RESERVE CAPACITY AT THE TIME OF WASTEWATER CAPACITY AVAILABILITY.

2. THE PROJECT SHALL MEET ENERGY EFFICIENCY AND ENERGY CODE COMPLIANCE THROUGH SPECIFICATIONS OF ENERGY STAR APPLIANCES, HVAC EQUIPMENT, HOT WATER EQUIPMENT, AND FOLLOW LEED PRINCIPLES WITH ENERGY EFFICIENT LOW-E DOUBLE PANE WINDOWS, INSULATED DOORS, AND BUILDING ENVELOPE TO CURRENT ENERGY CODES.

29. PUD EXPIRATION

EXTEND THE PUD EXPIRATION DATE FROM THE STANDARD ONE (1) YEAR FROM DATE OF APPROVAL TO FOUR (4) YEAR PUD EXPIRATION FROM DATE OF APPROVAL. 4

ARCHENICS
METRO ARCHITECTURE PARTNERSHIP, INC.
ARCHITECTURE · PLANNING · ENGINEERING · PROJECT MANAGEMENT
5401 SOUTH KIRKMAN ROAD, STE 440, ORLANDO, FL 32819
(407) 354-1477 · EMAIL: ROBBY@ARCHENICS.COM · WWW.ARCHENICS.COM

METRO ARCHITECTURE PARTNERSHIP, INC. OWNS ALL THE INTELLECTUAL PROPERTY AND OWNER OF THESE DRAWINGS, DESIGNS, SPECIFICATIONS, AND OTHER DOCUMENTS. THESE DOCUMENTS ARE INTENDED FOR USE ON THIS PROJECT ONLY. THESE DOCUMENTS WERE PREPARED BY EMPLOYEES OR CONSULTANTS FOR THIS PROJECT BASED ON THIS DOCUMENTS. REGARDLESS OF WHERE DOCUMENTS ARE FOUND, THEY ARE THE PROPERTY OF METRO ARCHITECTURE PARTNERSHIP, INC. AND MUST BE RETURNED UPON REQUEST. THESE DOCUMENTS, FOR THE AUTHORIZED PROJECT, MAY NOT BE ALTERED, STRETCHED, AND OTHER REVISIONS, PARTS, OR PORTIONS MAY NOT BE USED FOR OTHER PROJECTS WITHOUT WRITTEN AUTHORIZATION. THESE DOCUMENTS, WHEN PRINTED, MUST BE TO SCALE. DOCUMENTS NOT IMPRINTED WITH THE ORIGINAL SEAL AND SIGNATURE OF THE ARCHITECT MAY BE A REPLICATION OF THE ORIGINAL DOCUMENT.

© COPYRIGHT - ROBBY JOSHI, AIA

ROBBY R. JOSHI, RA, NCARB
LIC #AR-0017614

MT. DORA SMALL BAY MINI WAREHOUSING
1649 LINCOLN AVE
MT. DORA, FLORIDA 32757

MINI WAREHOUSING FACILITIES

NO	DATE	DESCRIPTION
1	04/19/24	CITY COMMENTS
2	06/13/24	CITY COMMENTS
3	08/27/24	CITY COMMENTS
4	10/22/24	CITY COMMENTS

PUD MASTER PLAN (AMENDED)

DRAWN	PP
DATE	02/29/24
PROJECT NO.	24-013

A-110

Wednesday, November 6, 2024 4:21:51 PM
W:\PROJECTS\PROJECTS 2024\24-013-MT. DORA – SITE-DRC\02 GFC DOCS\02 DESIGN DEV\01 ARCH\A-110-Site-Data-Sheet.dwg