City of Mount Dora
Planning and Development
510 N. Baker St.
Mount Dora, FL 32757
352-735-7112
Fax: 352-735-7191
E-mail: plandev@cityofmountdora.com

HISTORIC PRESERVATION BOARD
City Hall – 1st Floor Board Room, 510 N. Baker Street, Mount Dora, FL August 23, 2023 at 3:00 PM

AGENDA

I. Call To Order

II. Roll Call With Determination Of Quorum

III. Approval of Minutes of July 26, 2023

IV. Public participation/hearing for non-agenda items

V. Certificate of Appropriateness

a. 229 W 9th Avenue - Reroof
   i. Ex Parte Communication
   ii. Swearing in of staff/applicant
   iii. Staff presentation
   iv. Public input
   v. Discussion

b. 302 E 6th Avenue – Window Replacement
   i. Ex Parte Communication
   ii. Swearing in of staff/ applicant
   iii. Staff presentation
   iv. Public input
   v. Discussion

c. 138 E 5th Avenue – Exterior Renovations
   i. Ex Parte Communication
   ii. Swearing in of staff/ applicant
   iii. Staff presentation
   iv. Public input
   v. Discussion

VI. Other Business

VII. Announcement of next scheduled meeting date: September 20, 2023

VIII. Adjournment

All meetings are held the last Wednesday of each month at 4:00 p.m. at City Hall – 510 N. Baker Street

NOTICE: Please note that, for purposes of Section 286.011, Florida Statutes, two or more members of the City Council may be present at this meeting, and this meeting may be considered a City Council meeting.

NOTICE: If any person decides to appeal any decisions at this meeting with respect to any matter considered, such person may need a record of these proceedings. For such purpose, a person may need to ensure that a verbatim record of the proceedings is made, which record includes the testimony and evidence upon which the appeal is to be based.

NOTICE: For purposes of Section 286.011, *Florida Statutes*, two (2) or more members of the City Council may be present at this meeting and this meeting may be considered a City Council meeting although no decision of the City Council will be made

---

at this meeting and the City Council shall comply with the requirements of controlling State law in every respect.

NOTICE: In accordance with the Americans with Disabilities Act ("ADA") and Florida Statutes, Section 286.26, persons with disabilities needing a reasonable accommodation to participate in a public hearing or meeting should contact the City of Mount Dora's ADA Coordinator at least 48 hours prior to the proceeding. The ADA Coordinator may be contacted by phone at 352735-7126, ext. 1111, or by email at clerk@cityofmountdora.com.

If hearing impaired, telephone the Florida Relay Service numbers (800) 955-8771 (TDD) or (800) 955- 8770 (Voice) for assistance.

CITY OF MOUNT DORA
HISTORIC PRESERVATION BOARD
MEETING MINUTES
July 26, 2023

The City of Mount Dora Historic Preservation Board met on Wednesday, July 26, 2023, in the City Chambers on the first floor of City Hall, located at 510 N Baker Street, Mount Dora, Florida to exercise their powers as established in the Land Development Code.

I. Call To Order

Having been duly noticed as required by law, the July 26, 2023 meeting of the Mount Dora Historic Preservation Board was called to order at 3:00 p.m. by Det Joks, Chairman.

II. Roll Call With Determination Of Quorum

Present: Det Joks, Donald Marx, Robert Gordon, Amanda Kelley, and Kathleen Benjamin

Absent: John Miller and Patricia Huizing

City Staff: Michele Janiszewski, Senior Planner; Catherine Hutcheson, Administrative Coordinator; Whitney Scott, Administrative Coordinator; Sherry Sutphen, City Attorney

III. Approval of Minutes of June 28, 2023

MOTION by Marx, seconded by Gordon, to APPROVE the minutes of the June 28, 2023 Historic Preservation Board Meeting, as presented.

FOR: Joks, Marx, Gordon, Kelley, and Benjamin

AGAINST: None

MOTION CARRIED: 5 – 0

IV. Public participation/hearing for non-agenda items

No one wished to provide public comments.

V. Certificate of Appropriateness

a. **813 E 5th Avenue – Door Replacement and Railing**

i. Ex Parte Communication
ii. Swearing in of staff/Applicant
iii. Staff presentation
iv. Public input
v. Discussion

The Board had no ex parte communications to disclose. Ms. Sutphen swore in the Applicant, Ms. Julie Smith, and Ms. Janiszewski. Ms. Janisewski gave a presentation on the project and explained that the Applicant is seeking to replace four, exterior wood doors with steel doors.

DRAFT

Discussion on whether or not steel and fiberglass doors are appropriate subdivisions for wooden doors and the need for sturdy doors due to their exposure to the elements.

The Applicant stated that the doors have been left to the elements for years and cannot be closed due to the swelling of the wooden doors and the busted frames. The Applicant stated that she intends to utilize the same type of door, 15 light, to honor the historic era but is seeking to install steel doors instead of wood doors. Applicant confirmed that the doors would be painted and are steel inside and outside with no wood interior.

The Applicant confirmed that the house is going to be turned into law office and so steel would be an appropriate fit for security purposes.

Discussion on next steps to redevelop the property into a law office.

MOTION by Kelley, SECONDED by Benjamin, to APPROVE the application, as presented.

FOR: Joks, Marx, Gordon, Kelley, and Benjamin

AGAINST: None

MOTION CARRIED, 5 – 0

b. **132 W 9th Avenue – Door Replacement**

i. Ex Parte Communication. ii. Swearing in staff/Applicant
iii. Staff presentation.
iv. Public input
v. Discussion

The Board had no ex parte communications to disclose. Ms. Sutphen swore in the Applicant, Paul Thomas, and reminded Ms. Janiszewski that she was under oath. Ms. Michele Janisewski gave a presentation on the application. The applicant is seeking to remove an exterior, wood and replace it with a fiberglass door with an oak finish.

Discussion on whether or not steel and fiberglass doors are appropriate subdivisions for wooden doors.

MOTION by Benjamin, SECONDED by Kelley, to APPROVE the application, as presented.

FOR: Joks, Marx, Gordon, Kelley, and Benjamin

AGAINST: None

MOTION CARRIED, 5 – 0

VI. Other Business

a. **Simpson Farmhouse Update**

Ms. Cathy Lunday, Library Director, gave a presentation of the work being undertaken at the Simpson Farmhouse which includes restoration of the original windows and door.

Ms. Lunday explained that the demo crew for the project will be the same professionals completing the restoration.

Ms. Lunday stated that the structural framework appears intact and there is no sign of termites but there is some water damage which will be fixed with putty which will not be seen once the project is completed.

Ms. Lunday stated the 117 year old farmhouse is in remarkable shape, given its age. The project budgeted for $96,000 but the cost will be less than half once the job is completed.

Ms. Lunday discussed future restoration plans for the Simpson Farmhouse.

Ms. Lunday stated that the Austin Historical Society will be conducting an event at the Library in January for anyone interested in learning about historical window restorations.

Discussion about the Austin Historical Society and their contact information.

b. **Obelisk Marker Identification**

Ms. Janisewski and Ms. Lunday asked the board if anyone wanted to volunteer to check the status of the obelisk markers around the historic district to update the inventory of them.

Ms. Lunday stated there are 69 of them throughout the CRA/ Historic District.

Ms. Lunday stated that many of the markers have been removed over the years and staff is looking to get the remaining obelisk markers in better shape by cleaning, scraping, and painting them.

Discussion on property cleaning methods for the concrete markers.

Ms. Lunday gave new information about the City being granted a Project Archivist Grant for the next year from the division of Historical Resources. They were granted $35,000.00 to hire a contract archivist. The three projects included in the grant. One being Downtown by the Decades, a digital collection in the library's archives, showing maps where old buildings were located by the decade for the last 120 years.

c. **Further Discussion**

Ms. Kathleen Benjamin began a discussion on the agenda packets and the amount of information included in the packet. Staff and the Board discussed the amount of information included in the agenda packets.

Ms. Sutphen stated that all of the applicants' submittal should stay in the packets to ensure the Board's decision is rendered based on being provided with all the information in case there is a possible appeal.

Board and Staff discussed options to ensure the Board is provided with all the relevant information and the agenda packets are not so large.

Ms. Janisewski stated the Planning Department is looking into other historical activities that the City can get involved in.

Mr. Joks gave information about the state wide conference that he and Mr. Marx attended regarding how to keep the historical area safe during a hurricane.

Discussion with the board and Ms. Sutphen about the recent case on Highland Street and the Railroad.

VII. Announcement of next scheduled meeting: August 30, 2023

Discussion regarding the date of the meeting and date of the August meeting was changed to the 23rd of August**.**

VIII. Adjournment

MOTION by Marx, SECONDED by Kelley, to adjourn the meeting. The Board unanimously voted to adjourn the meeting at 3:45 p.m.

Dek Joks, Chairman,	***Catherine Hutcheson***
Historic Preservation Board	***Administrative Coordinator***

CITY OF MOUNT DORA

Planning and Development
510 N. Baker St.
Mount Dora, FL 32757
352-735-7113
plandev@cityofmountdora.com

DATE: August 23, 2023

TO: Historic Preservation Board

FROM: Michele Janiszewski, AICP, Senior Planner

RE: **Tab 1 - Certificate of Appropriateness; 229 W 9th Ave (Location); Remove Asphalt Shingles and Replace with Classic Rib Metal; John Rex Miller and Jill Hensley Miller (Owners); Skymark Roofing, LLC (Applicant).**

Property Information:

Address:	229 W 9th Ave	**Current Use:**	Residence
Zoning District:	R-1A	**Land Use:**	Medium Density

Structure Information:

Date of Construction:	1916	**Style:**	Bungalow
Structural System:	Wood Frame	**Foundation Type:**	Concrete
Siding:	Wood Siding	**Stories:**	Two
Roof Type:	Gable	**Chimneys:**	One / Brick

Background on Architectural Style:
During the first three decades of the 20th century, the Bungalow became the most common style of residential architecture in the United States. Bungalows came in various shapes and forms, but small size, simplicity, and economy generally characterized the style.

Bungalows are typically one or two stories in height and typically have a rectangular floor plan; exterior material comprised of horizontal wood siding and shingles (less frequently, stucco, brick); gable roof; tapered chimneys; simple; exposed structural elements (ridge beams, truss work, rafters, purlins); gable porch roof; and open porches. Roofing materials were typically sheet metal or composition shingles.

Bungalows typically feature a balanced and well-proportioned, but not symmetrical, appearance from the front; a low, exposed roof, often with beams or rafters showing; 1.5 stories in height; a modest front porch or veranda; and square, tapered columns, sometimes called "bungalow columns."

Staff Analysis:
The applicant is seeking to remove the existing, asphalt shingles on the rood and replace it with classic rib metal (36"). The brick chimney will not be affected by the scope of work. The

application indicates that the reason for the reroof is due to the age of the existing roof.

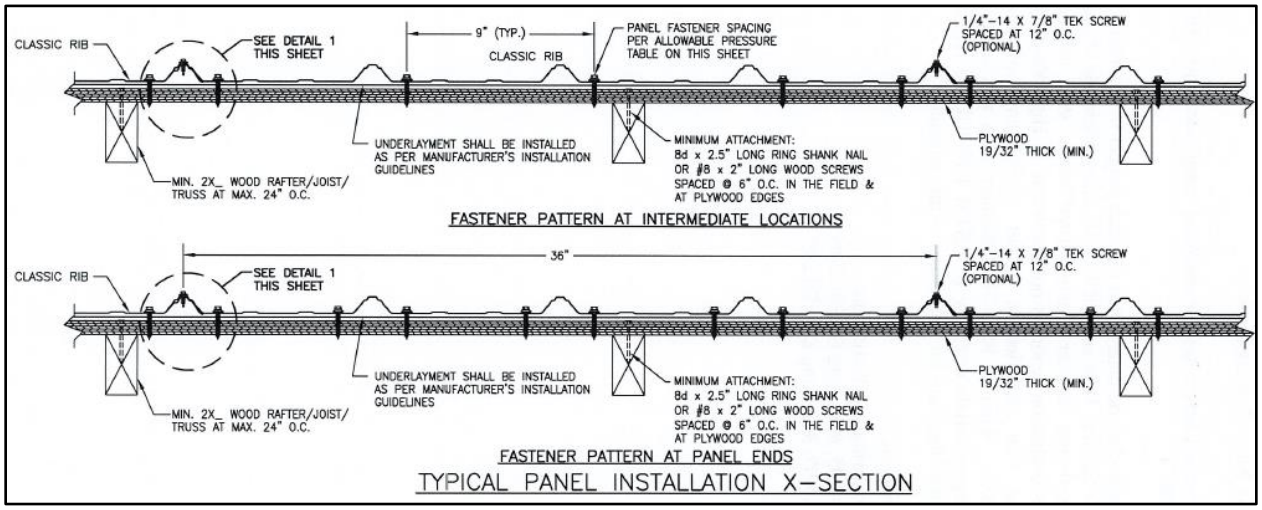

Guidance on Roofs:

Pursuant to the Mount Dora Historic Design Guidelines, roofs are highly visible components of historic buildings and are an integral part of a building's overall design and often help define its architectural style. Roof shapes in Mount Dora include gable, hip, flat and gambrel. Historic roofing materials include standing seam metal, pressed metal shingle, composition shingle and barrel tile.

Roofs perform an essential function in keeping a building weather tight. As a result, they are particularly subject to change. In Mount Dora, the most common original roofing materials were embossed or crimped sheet metal and sawn wood shingles. Virtually all original wood shingle roofs have been removed or covered over, often with ornamental sheet metal. Such historic changes to roofs have gained a significance in their own right and should be respected under Standard 4.

Where existing roofing material is non-original and non-significant, there is greater flexibility. The existing roof may be retained, replaced in a historically accurate manner, or treated in a contemporary style in compliance with Standards 6 and 9. Even if existing surfacing is inappropriate, the replacement material must be compatible with the overall design of the building.

Staff Recommendation:

Staff recommends approval of the application.

Attachments:

Photos
Roof Guidelines
2008 Site Form
2020 Site Form
Application

CITY OF MOUNT DORA

229 W 9th Ave
Site Photos

Guidance on Roofs and Roof Surfaces

City of Mount Dora Historic Design Guidelines

Recommendations:

1. Identify, retain, and preserve roofs – and their functional and decorative features – that are important in defining the overall historic character of the building. This includes the roof's shape, such as hip, gambrel, and mansard; decorative features such as cupolas, cresting, chimneys and weathervanes; and roofing material such as slate, wood, clay tile, and metal, as well as its size, color, and patterning.

2. Provide adequate roof drainage and insure that the roofing material provides a weather-tight covering for the structure.

3. Protect a leaking roof with plywood or tarp and building paper until it can be properly repaired.

4. Replace deteriorated roof surfacing with matching materials or new materials, such as composition shingles or tabbed asphalt shingles, in dark shades that match the original in composition, size, shape, color, and texture.

5. Retain or replace where necessary: dormer windows, cupolas, cornices, brackets, chimneys, cresting, weather vanes, and other distinctive architectural or stylistic features that give a roof its essential character.

6. Repair a roof by reinforcing the historic materials which comprise roof features. Repairs will also generally include the limited replacement in kind – or with compatible substitute material – of those extensively deteriorated or missing parts of features when there are surviving prototypes such as cupola louvers, dentils, dormer roofing; or slates, tiles, or wood shingles on a main roof.

7. Replace in kind an entire feature of the roof that is too deteriorated to repair – if the overall form and detailing are still evident – using the physical evidence as a model to reproduce the feature. Examples can include a large section of roofing, or a dormer or chimney. If using the same kind of material is not technically or economically feasible, then a compatible substitute material may be considered.

8. Design and construct a new feature when the historic feature is completely missing, such as a chimney or cupola. It may be an accurate restoration using historical, pictorial, and physical documentation; or be a new design that is compatible with the size, scale, material, and color of the historic building.

***Avoid**:*

1. Removing a feature of the roof that is unrepairable, such as a chimney or dormer, and not replacing it; or replacing it with a new feature that does not convey the same visual appearance.

2. Constructing additional stories so that the historic appearance of the building is radically changed.

3. Removing a major portion of the roof or roofing material that is repairable, then reconstructing it with new material in order to create a uniform or "improved" appearance.

4. Changing the essential character of a roof by adding inappropriate features such as dormers, vents, skylights, air-conditioners, and solar collectors which are visible from public right-of-ways.

5. Stripping the roof of sound historic materials such as slate, clay tile, wood, and architectural metal.

6. New materials, such as roll roofing, whose composition, size, shape, color, and texture alter the appearance of the building.

7. Using a substitute material for the replacement part that does not convey the visual appearance of the surviving parts of the roof or that is physically or chemically incompatible.

Florida Master Site File

HISTORICAL STRUCTURE FORM

Electronic Version 1.1.0

Site #8 LA00427
Recorder # 54
Field Date 3/15/2008
Form Date 3/15/2008
FormNo 200803
FormNo = Field Date (YYYYMM)

First Site Form Recorded for this Site? NO

GENERAL INFORMATION

Site Name (address If none) 229 W 9th Ave
Multiple Listing (DHR only)
Other Names >>
Survey or Project Name
Survey#
National Register Category Building(s)

LOCATION & IDENTIFICATION

Address

Street No.	Direction	Street Name	Street Type	Direction Suffix
229	West	9th	Avenue	

Cross Streets (nearest/ between)
City / Town (within 3 miles) Mount Dora
In Current City Limits? YES
County Lake
Tax Parcel #(s)
Subdivision Name
Block
Lot
Ownership
Name of Public Tract (e.g., park)
Route to (especially if no street address)

MAPPING

USGS 7.5' Map Name
Publication Date
>> EUSTIS;1980
Township:
Range:
Section:
1/4 section:
>> 19S ;27E ;30;UNSP
Irregular Section Name:
Landgrant
UTM: Zone
Easting
Northing
Plat or Other Map (map's name, location)

DESCRIPTION

Style Bungalow
Other Style
Exterior Plan Irregular
Other Exterior Plan
Number of Stories 2
Structural System(s) >> Wood frame
Other Structural System(s)
Foundation Type(s) >> Continuous
Other Foundation Types
Foundation Material(s) >> Poured Concrete Footing
Other Foundation Material(s)
Exterior Fabric(s) >> Weatherboard
Other Exterior Fabric(s)
Roof Type(s) >> Gable
Other Roof Type(s)
Roof Material(s) >>
Other Roof Material(s)
Roof Secondary Structure(s) (dormers etc) >>
Other Roof Secondary Structure(s)
Number of Chimneys 1
Chimney Material
Other Chimney Material(s)
Chimney Location(s)

HISTORICAL STRUCTURE FORM

8LA00427

DESCRIPTION (continued)

Window Descriptions 12/11, 2/1, metal Sash

Main Entrance Description (stylistic details)

Porches: #open ____ #closed 1 #incised ____ Location(s)

Porch Roof Types(s)

Exterior Ornament

Interior Plan Other Interior Plan

Condition Good

Structure Surroundings

Commercial: Residential: MOSTly this category

Institutional: Undeveloped:

Ancillary Features (Number / type of outbuildings, major landscape features)

Archaeological Remains (describe):

If archaeological remains are present, was an Archaeological Site Form completed? ____

Narrative Description (optional)

HISTORY

Construction year 1916

Architect (last name first): Builder (last name first):

Changes in Locations or Conditions

Type of Change	Year of Change	Date Change Noted	Description of Changes
>>			

Structure Use History

Use Year Use Started Year Use Ended >> Private residence;1916;

Other Structure Uses

Ownership History (especially original owner, dates, profession, etc.)

RESEARCH METHODS

Research Methods >> Examine local tax records

Other research methods

SURVEYOR'S EVALUATION OF SITE

Potentially Eligible for a Local Register? YES Name of Local Register if Eligible

Idividually Eligible for National Register? NO

Potential Contributor to NR District? YES

Area(s) of historical significance >>

Other Historical Associations

Explanation of Evaluation (required) Because the resource retains much of its historic integrity and is located in a well-preserved collection of historic buildings, it appears to contribute to a historic district.

HISTORICAL STRUCTURE FORM

8LA00427

DOCUMENTATION (Photos, Plans, etc.)

Photographic Negatives or Other Collections Not Filed with FMSF, Including Field Notes, Plans, other Important Documents.

Document type: _____ Maintaining Organization: _____

File or Accession #: _____ Descriptive Information: _____

>>

RECORDER INFORMATION

Recorder Name (Last, First) Bland, Myles

Recorder Address / Phone 4104 St. Augustine Road Jacksonville, FL

Recorder Affiliation Bland & Associates, Inc Other Affiliation _____

Is a Text-Only Supplement File Attached (Surveyor Only)? NO

****** MASTER SITE FILE USE ONLY ******

SHPO's Evaluation of Resource

_____ Date _____

Cultural Resource Type: SS

Electronic Form Used: S110

Form Type Code: NORM

Form Quality Ranking: NEW

Form Status Code: SCAT

Supplement Information Status: NO SUPPLEMENT

Supplement File Status: NO SUPPLEMENT FILE

FMSF Staffer: _____

Computer Entry Date: 5/21/2008

Form Comments: _____

REQUIRED PAPER ATTACHMENTS	(1) USGS 7.5" MAP WITH STRUCTURE PINPOINTED IN RED (2) LARGE SCALE STREET OR PLAT MAP (3) PHOTO OF MAIN FACADE, B&W, AT LEAST 3"X5"

LA00427-200803

Supplementary Printout

> **USGS map name/year of publication or revision:**
EUSTIS;1980

> **Township/Range/Section/Qtr:**
19S ;27E ;30;UNSP

> **Structural system(s):**
Wood frame

> **Foundation types:**
Continuous

> **Foundation materials:**
Poured Concrete Footing

> **Exterior fabrics:**
Weatherboard
Wood shingles

> **Roof types:**
Gable

> **Roof materials:**

> **Roof secondary structures (dormers etc):**

> **Change status/year changed/date noted/nature:**

> **Original, intermediate, present uses/year started/year ended:**
Private residence;1916;

> **Research methods:**
Examine local tax records
FL Master Site File-Cultural Resources
Pedestrian

> **Area(s) of historical significance:**

> **Repositories: Collection/Housed/Accession#/Describe**

> **[Other name(s)]:**

54

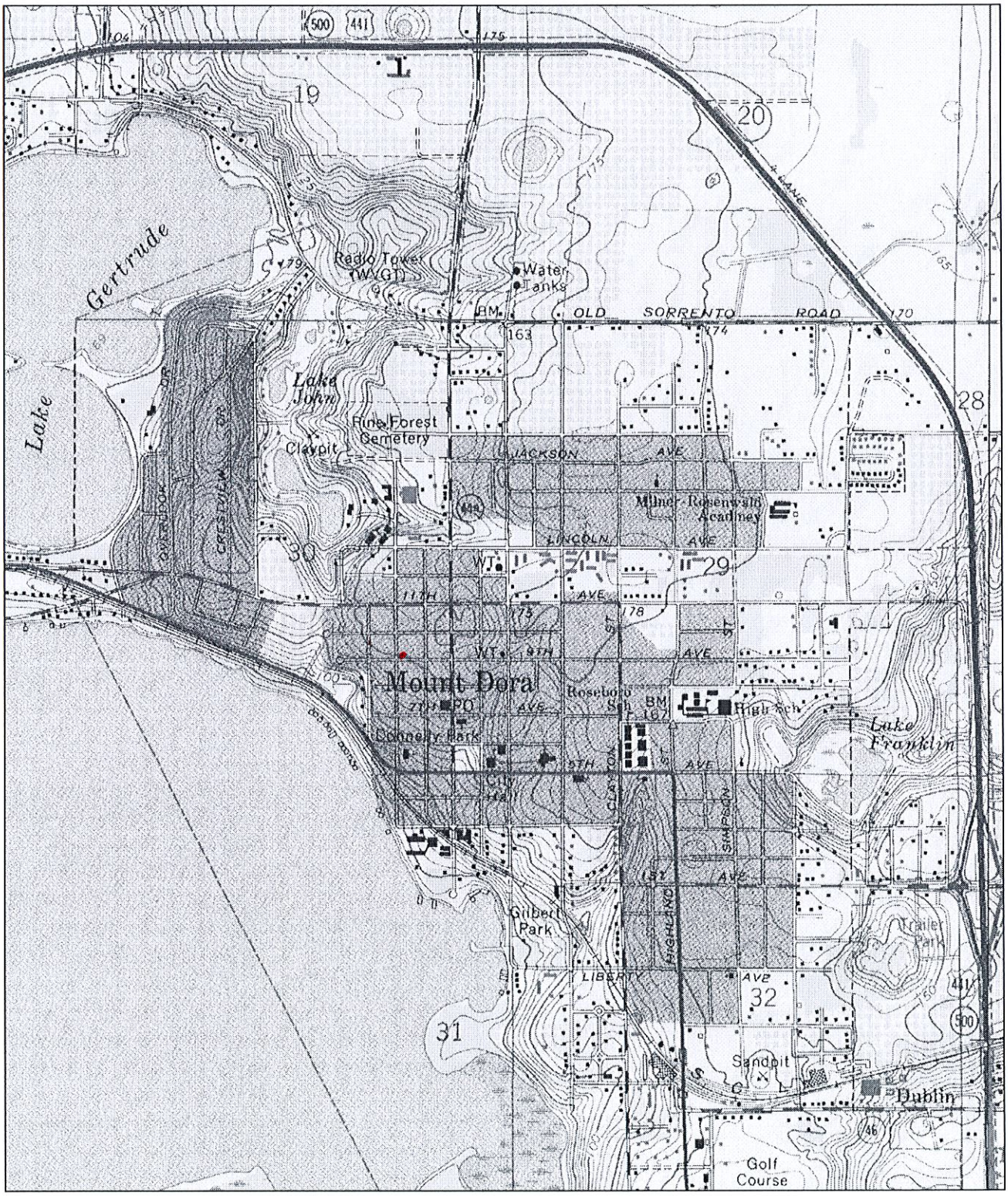

N

0 — 0.5 Mi

0 — 2000 Ft

Map provided by MyTopo.com

LA 427

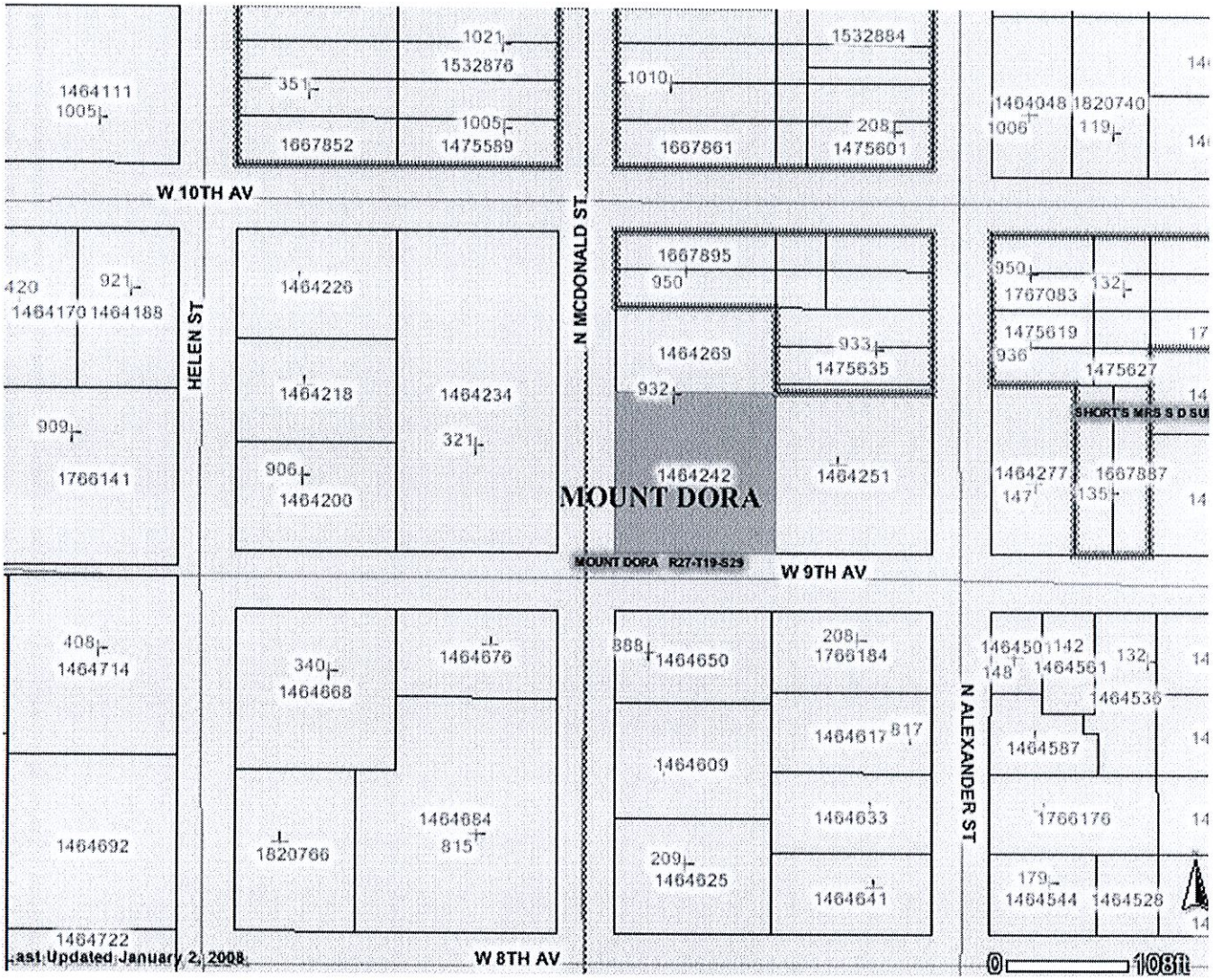
1464111
1005
1021
1532876
351
1005
1475589
1667852
1532884
1010
208
1475601
1667861
1464048
1820740
1006
119
W 10TH AV
N MCDONALD ST
HELEN ST
420
921
1464170
1464188
909
1766141
1464226
1464218
1464234
321
906
1464200
1667895
950
1464269
933
1475635
932
1464242
1464251
MOUNT DORA
MOUNT DORA R27-T19-S29
W 9TH AV
950
1767083
132
1475619
936
1475627
SHORTS MRS S D SU
1464277
147
1667887
135
408
1464714
340
1464668
1464676
888
1464650
208
1766184
1464617
817
1464609
1464633
1464692
1820766
1464684
815
209
1464625
1464641
1464722
N ALEXANDER ST
1464501
142
148
1464561
132
1464536
1464587
1766176
179
1464544
1464528
Last Updated January 2, 2008
W 8TH AV
0
1081ft

RN54

LA427

54

LA
427

Clear Form Values

Page 1

☐ Original
☒ Update

HISTORICAL STRUCTURE FORM
FLORIDA MASTER SITE FILE
Version 5.0 3/19

Site#8 LA00427
Field Date 11-16-2019
Form Date 11-16-2019
Recorder # 2

Shaded Fields represent the minimum acceptable level of documentation.
Consult the *Guide to Historical Structure Forms* for detailed instructions.

Site Name(s) (address if none) 229 West 9th Avenue — Multiple Listing (DHR only) _____
Survey Project Name Mount Dora Historic Site Survey — Survey # (DHR only) _____
National Register Category (please check one) ☒building ☐structure ☐district ☐site ☐object
Ownership: ☐private-profit ☐private-nonprofit ☐private-individual ☐private-nonspecific ☐city ☐county ☐state ☐federal ☐Native American ☐foreign ☐unknown

LOCATION & MAPPING

Clear Location Values

	Street Number	Direction	Street Name	Street Type	Suffix Direction
Address:	229	W	9th	Avenue	

Cross Streets (nearest / between) Between North Alexander St and North McDonald St
USGS 7.5 Map Name EUSTIS — USGS Date 2018 — Plat or Other Map _____
City / Town (within 3 miles) Mount Dora — In City Limits? ☒yes ☐no ☐unknown — County Lake
Township 19S — Range 27E — Section 30 — ¼ section: ☐NW ☐SW ☐SE ☐NE — Irregular-name: _____
Tax Parcel # 291927001002900000 — Landgrant _____
Subdivision Name _____ — Block 29 — Lot _____
UTM Coordinates: Zone ☐16 ☒17 — Easting 436917 — Northing 3186469
Other Coordinates: X: -81.64645 — Y: 28.80424 — Coordinate System & Datum WGS84
Name of Public Tract (e.g., park) _____

HISTORY

Clear History Values

Construction Year: 1925 ☒approximately ☐year listed or earlier ☐year listed or later
Original Use Residence, private — From (year): 1925 — To (year): 2019
Current Use Residence, private — From (year): 1925 — To (year): 2019
Other Use _____ — From (year): _____ — To (year): _____
Moves: ☐yes ☒no ☐unknown — Date: _____ — Original address N/A
Alterations: ☒yes ☐no ☐unknown — Date: _____ — Nature Closed in porch
Additions: ☒yes ☐no ☐unknown — Date: _____ — Nature _____
Architect (last name first): _____ — Builder (last name first): _____
Ownership History (especially original owner, dates, profession, etc.)

Is the Resource Affected by a Local Preservation Ordinance? ☒yes ☐no ☐unknown — Describe Historic District Boundary

DESCRIPTION

Clear Description Values

Style Craftsman — Exterior Plan Square — Number of Stories 2
Exterior Fabric(s) 1. Wood siding — 2. _____ — 3. _____
Roof Type(s) 1. Gable — 2. _____ — 3. _____
Roof Material(s) 1. Asphalt shingles — 2. _____ — 3. _____
Roof secondary strucs. (dormers etc.) 1. _____ — 2. _____

Windows (types, materials, etc.)

Wood windows

Distinguishing Architectural Features (exterior or interior ornaments)

Ancillary Features / Outbuildings (record outbuildings, major landscape features; use continuation sheet if needed.)

Tool shed, detached garage

DHR USE ONLY	OFFICIAL EVALUATION	DHR USE ONLY
NR List Date _____	SHPO – Appears to meet criteria for NR listing: ☐yes ☐no ☐insufficient info — Date _____ — Init. _____	
☐Owner Objection	KEEPER – Determined eligible: ☐yes ☐no Clear Check Boxes — Date _____	
	NR Criteria for Evaluation: ☐a ☐b ☐c ☐d (see *National Register Bulletin 15*, p. 2)	

Florida Master Site File / Div. of Historical Resources / R. A. Gray Bldg / 500 S Bronough St., Tallahassee, FL 32399-0250
Phone **850.245.6440** / Fax **850.245.6439** / E-mail **SiteFile@dos.myflorida.com**

HISTORICAL STRUCTURE FORM

Site #8 LA00427

DESCRIPTION (continued)

Clear Description Values

Chimney: No. 1 Chimney Material(s): 1. Brick 2.

Structural System(s): 1. Wood frame 2. 3.

Foundation Type(s): 1. Continuous 2.

Foundation Material(s): 1. Concrete, Generic 2.

Note: you may use the last box in each field to type in an answer that does not appear in the list provided

Main Entrance (stylistic details)

4-steps, also a side entrance with covered porch with posts.

Porch Descriptions (types, locations, roof types, etc.)

Enclosed porch with awning windows.

Condition (overall resource condition): ☐ excellent ☒ good ☐ fair ☐ deteriorated ☐ ruinous

Narrative Description of Resource

Archaeological Remains ☐ Check if Archaeological Form Completed

RESEARCH METHODS (select all that apply)

☐ FMSF record search (sites/surveys)	☐ library research	☒ building permits	☒ Sanborn maps
☐ FL State Archives/photo collection	☐ city directory	☐ occupant/owner interview	☒ plat maps
☒ property appraiser / tax records	☐ newspaper files	☐ neighbor interview	☐ Public Lands Survey (DEP)
☐ cultural resource survey (CRAS)	☒ historic photos	☐ interior inspection	☐ HABS/HAER record search

☒ other methods (describe) Field visit and documentation

Bibliographic References (give FMSF manuscript # if relevant, use continuation sheet if needed)

OPINION OF RESOURCE SIGNIFICANCE

Clear Significance Values

Appears to meet the criteria for National Register listing individually? ☐ yes ☒ no ☐ insufficient information

Appears to meet the criteria for National Register listing as part of a district? ☒ yes ☐ no ☐ insufficient information

Explanation of Evaluation (**required**, whether significant or not; use separate sheet if needed)

This structure does not appear to meet the National Register listing individually, however, the structure is an example of successful adaptive reuse and contributes to the Mount Dora Historic District.

Area(s) of Historical Significance (see *National Register Bulletin 15*, p. 8 for categories: e.g. "architecture", "ethnic heritage", "community planning & development", etc.)

1. Architecture 3. 5.

2. Community planning & developm 4. 6.

DOCUMENTATION

Clear Documentation Values

Accessible Documentation Not Filed with the Site File - including field notes, analysis notes, photos, plans and other important documents

1) Document type Maintaining organization

Document description File or accession #'s

2) Document type Maintaining organization

Document description File or accession #'s

RECORDER INFORMATION

Recorder Name Bradley Benmoshé Affiliation Other

Recorder Contact Information 6500 North Andrews Avenue, FOrt Lauderdale, Florida 33309 / 954-776-1616

(address / phone / fax / e-mail)

Required Attachments

❶ **USGS 7.5' MAP WITH STRUCTURE LOCATION CLEARLY INDICATED**

❷ **LARGE SCALE STREET, PLAT OR PARCEL MAP** (available from most property appraiser web sites)

❸ **PHOTO OF MAIN FACADE, DIGITAL IMAGE FILE**

When submitting an image, it must be included in digital AND hard copy format (plain paper grayscale acceptable). Digital image must be at least 1600 x 1200 pixels, 24-bit color, jpeg or tiff.

Street Map

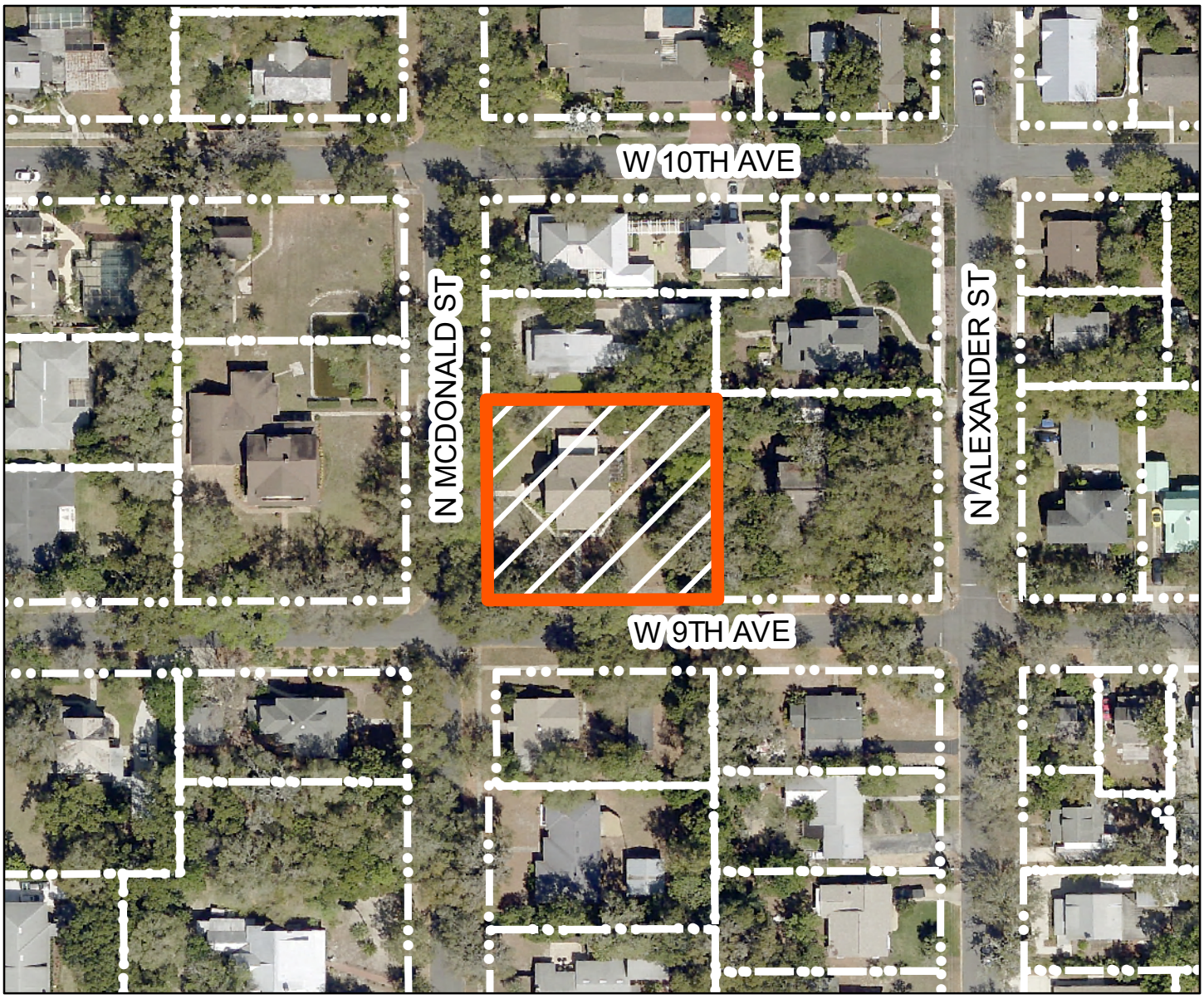

N

229 WEST 9TH AVE MOUNT DORA FL 32757

0 40 80 160 Feet

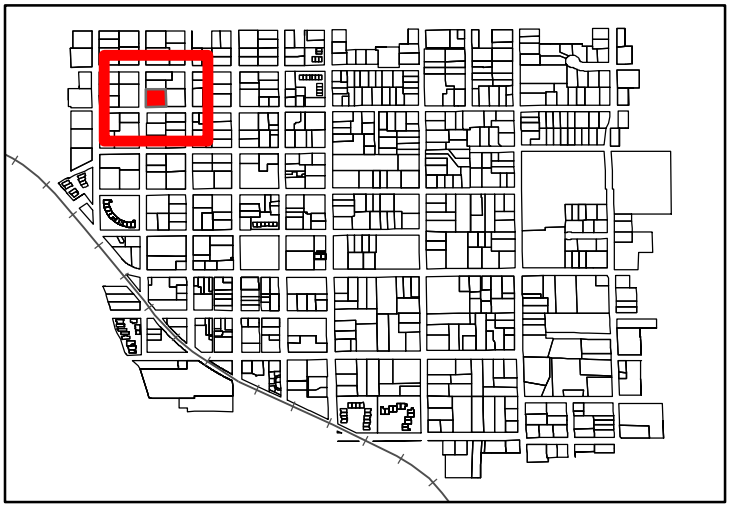

LA00427

KCI TECHNOLOGIES

Data Sources: Lake County, City of Mount Dora

USGS Map

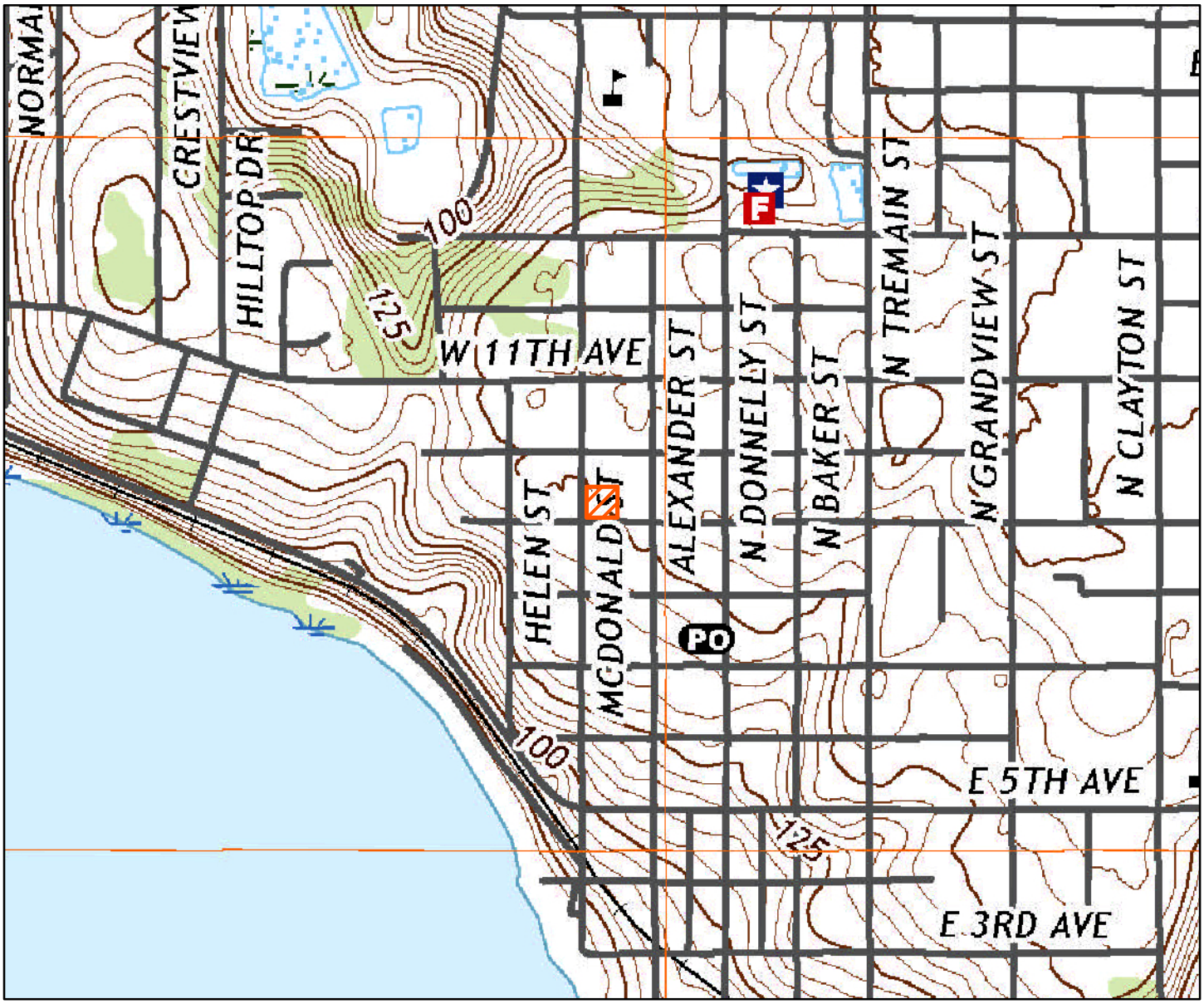

N

LA00427

229 WEST 9TH AVE MOUNT DORA FL 32757

Source: United States Geological Survey Eustis, FL 2018

KCI TECHNOLOGIES

220

CITY OF MOUNT DORA

RECEIVED AUG 15 2023

Planning and Development
510 N. Baker St.
Mount Dora, FL 32757
352-735-7113
plandev@cityofmountdora.com

APPLICATION FOR CERTIFICATE OF APPROPRIATENESS
Renovations, Additions and New Construction

Property Address: 229 West 9th Ave Alternate Key No.: 1464242

Property Owner: John R. Miller

Applicant: Skymark Roofing LLC

Applicant's Mailing Address: 3505 N. Hwy 19A Mount Dora FL 32757

Applicant's Phone Number: 352-636-1880

Applicant's Email Address: brian@skymarkroofing.com

Current Building Use (e.g. residential or commercial): Residential

Application Type:

- ☐ New Construction
- ☐ Addition
- ☑ Renovation

Check any structural systems or elements which will be affected by this project:

- ☐ Steps or Stairways
- ☐ Windows
- ☐ Doors
- ☐ Walls or Fences
- ☐ Foundation
- ☐ Porches or Porte Cochere
- ☐ Chimney
- ☐ Exterior Lighting
- ☐ Siding/Stucco/Façade Work
- ☐ Walls/Structural
- ☑ Roof
- ☐ Landscape Features

Existing Materials: Shingles

Proposed Materials: Classic Rib metal 36" wide (Brown #12)

Is there a chimney on the building and will it be affected? Not affected, Yes 1

Full Description of Proposed Alteration(s) or Construction including materials; please attach additional documentation if needed: Remove shingle roof & underlayment Down to the wood deck. Install High Temp self Adhering underlayment. Install Metal Panels

Reason for Addition / Modification: Age of Existing roof

Note: This application is for a Certificate of Appropriateness from the Historic Preservation Board only. The proposed work must also meet Zoning and Building Code Requirements; additional permits may be required.

Submission of the application implies permission is granted to the City of Mount Dora to inspect and document any necessary information needed to process this request.

JOB # / NAME: 229 WEST 9TH AVENUE

DISTRIBUTOR: BEACON,N LEESBURG

CONTACT: WAYNE BAIN

DRAWING TYPE:

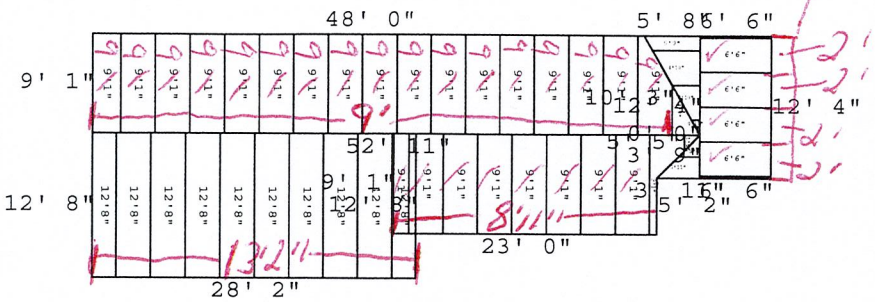

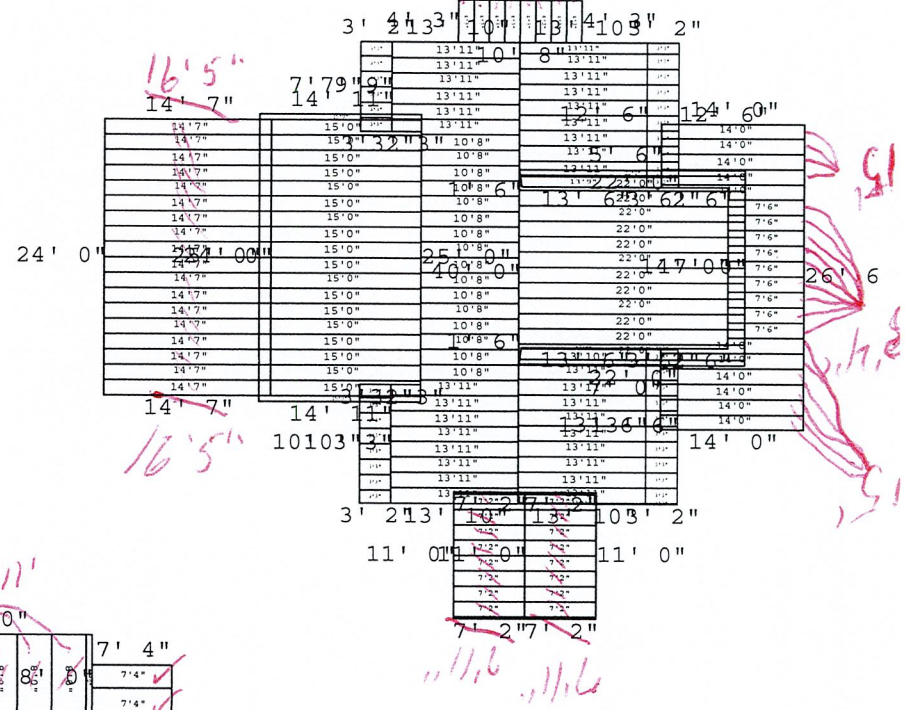

Verification Signature

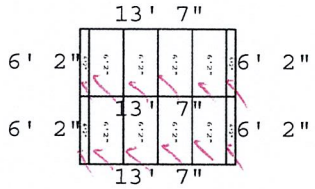

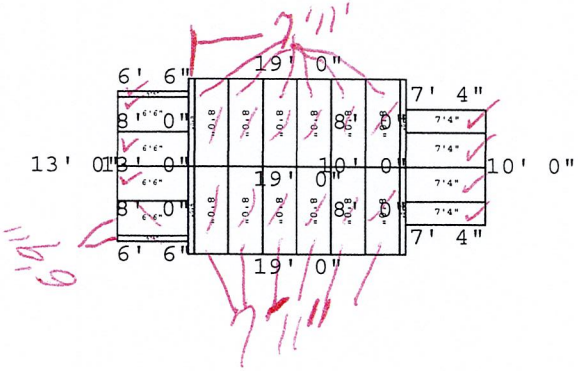

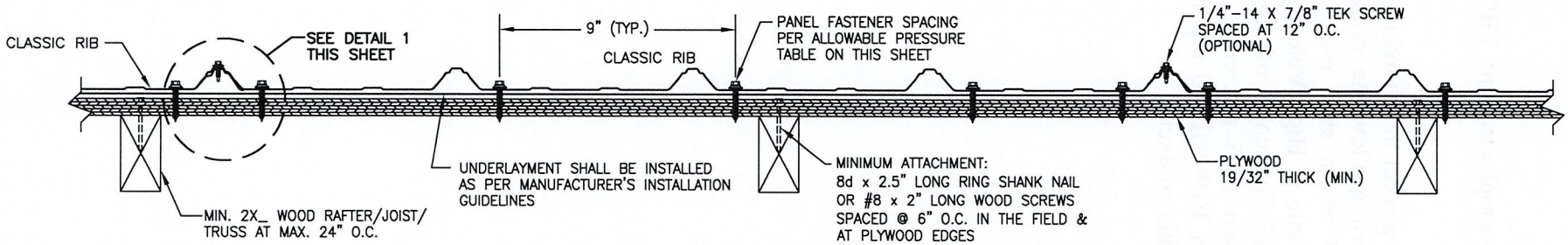

FASTENER PATTERN AT INTERMEDIATE LOCATIONS

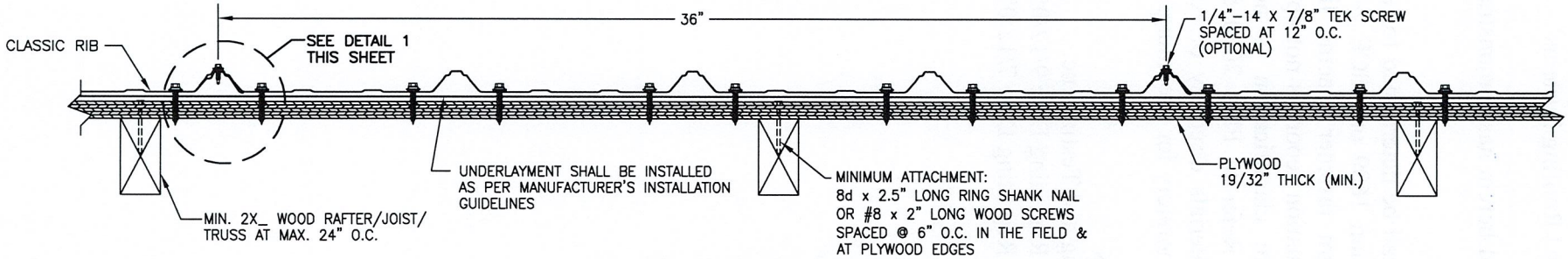

FASTENER PATTERN AT PANEL ENDS

TYPICAL PANEL INSTALLATION X-SECTION

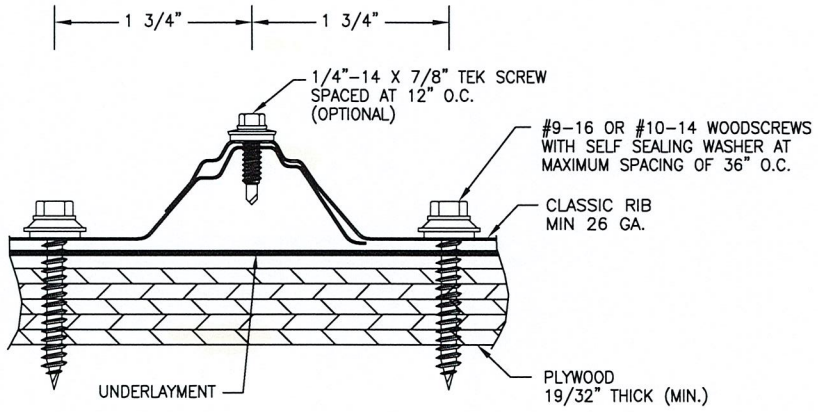

DETAIL 1

ALLOWABLE UPLIFT PRESSURE

FASTENER SPACING (IN)	PRESSURE (PSF)
36	74.8
24	92.3
18	133.9

GENERAL NOTES:

1. ARCHITECTURAL ROOF PANEL HAS BEEN DESIGNED IN ACCORDANCE WITH THE FLORIDA BUILDING CODE (FBC).
2. ROOF PANELS SHALL BE MIN. 26 GA. (t = 0.0181"). EFFECTIVE COVERING WIDTH OF PANEL = 36".
3. THE ROOF PANELS SHALL BE INSTALLED OVER SHEATHING & STRUCTURE AS SPECIFIED ON THIS DRAWING.
4. REQUIRED DESIGN WIND LOADS SHALL BE DETERMINED FOR EACH PROJECT. THIS PANEL SYSTEM MAY NOT BE INSTALLED WHEN THE REQUIRED DESIGN WIND LOADS ARE GREATER THAN THE ALLOWABLE WIND LOADS SPECIFIED ON THIS DRAWING.
5. ALL FASTENERS MUST BE IN ACCORDANCE WITH THIS DRAWING & THE FLORIDA BUILDING CODE. IF A DIFFERENCE OCCURS BETWEEN THE MINIMUM REQUIREMENTS OF THIS DRAWING & THE CODE, THE CODE SHALL CONTROL.
6. RAFTERS/JOISTS/TRUSSES MUST BE DESIGNED TO WITHSTAND WIND LOADS AS REQUIRED FOR EACH APPLICATION AND ARE THE RESPONSIBILITY OF OTHERS.
7. REQUIRES APPLIED LAP SEALANT FOR ROOF SLOPE < 3:12.

DRAWN BY: B.S. | CHECKED BY: D.S.
PLOT: | DATE: 10/6/20

NO.	REVISION DESCRIPTION	BY	DATE

DRAWING TITLE: CLASSIC RIB PANEL

MANUFACTURER
METAL SALES MANUFACTURING CORP.
545 SOUTH 3RD ST., SUITE 200
LOUISVILLE, KY 40202
502-855-4300

CONSULTANTS
BALA SOCKALINGAM, PH.D., P.E.
1216 N LANSING AVE, SUITE C
TULSA, OK 74106
PHONE: 918-492-5992 FAX: 866-366-1543

DRAWING NO. 2397-8 | REV.

PAGE NO. 1 OF 1

Test Standards:	Roof assembly tested in accordance with TAS 125-03 'Standard Requirements for Metal Roofing Systems'.
Code Compliance:	The product described herein has demonstrated compliance with FBC 2020 Section 1507.4.
Product Limitations:	Design wind loads shall be determined for each project in accordance with FBC 2020 Section 1609 or ASCE 7-16 using allowable stress design. The maximum fastener spacing listed herein shall not be exceeded. This evaluation report is not applicable in High Velocity Hurricane Zone. Fire classification is not within scope of this Evaluation Report. Refer to FBC 2020 Section 1505 and current approved roofing materials directory or ASTM E108/UL790 report from an accredited laboratory for fire ratings of this product.
Supporting Documents:	TAS 125 Test Reports Farabaugh Engineering and Testing Inc. Project No. T193-05, Reporting Date 9/12/05 Project No. T240-07, Reporting Date 7/12/07

EVALUATION REPORT OF
METAL SALES MANUFACTURING CORPORATION
'26 GA. CLASSIC RIB PANEL'

FLORIDA BUILDING CODE 7TH EDITION (2020)
FLORIDA PRODUCT APPROVAL
FL 14645.8-R4
ROOFING
METAL ROOFING

Prepared For:
Metal Sales Manufacturing Corporation
545 South 3rd Street, Suite 200
Louisville, KY 40202
Telephone: (502) 855-4300
Fax: (502) 855-4290

Prepared By:
Bala Sockalingam, Ph.D., P.E.
Florida Professional Engineer #62240
1216 N Lansing Ave., Suite C
Tulsa, OK 74106
Telephone: (918) 492-5992
FAX: (866) 366-1543

This report consists of
Evaluation Report (3 Pages including cover)
Installation Details (1 Page)

BALA SOCKALINGAM
LICENSE
No 62240
STATE OF
FLORIDA
PROFESSIONAL ENGINEER

10.7.2020

Report No. C2397-8
Date: 10.7.2020

Manufacturer:	Metal Sales Manufacturing Corporation
Product Name:	Classic Rib
Panel Description:	36" wide coverage with (5) 3/4" high ribs
Materials:	Min. 26 ga., 80 ksi steel or min. 24 ga., 50 ksi steel. Galvanized coated steel (ASTM A653) or Galvalume coated steel (ASTM A792) or painted steel (ASTM A755). Corrosion resistant as per FBC 2020 Section 1507.4.3.
Deck Description:	Min. 19/32" thick plywood or min. ¾" thick wood plank (min SG of 0.42) for new and existing constructions. Designed by others and installed as per FBC 2020.
Deck Attachment: (Minimum)	8d x 2.5" long ring shank nails or #8 x 2" long wood screws @ 6" o.c. in the field and edges. Designed as per FBC 2020.
Underlayment:	Minimum underlayment as per FBC 2020 Section 1507.4.5.1.
Substrate (optional):	Min 1" x 4" No. 2 SYP wood purlins over min. 19/32" thick plywood deck fastened to supports at maximum 24" o.c. Wood purlins shall be fastened to wood rafters with (2) #9 x 3" long wood screws. The wood purlins will be spaced same as panel fastener spacing along panel length. The wood purlin, purlin to the rafter connection and rafters must be designed by others to the carry the load imposed on the panels and installed as per FBC 2020.
Slope:	1/2:12 or greater in accordance with FBC 2020 Section 1507.4.2. Requires applied lap sealant for roof slopes less than 3:12.
Design Uplift Pressure: (Factor of Safety = 2)	74.8 psf @ fastener spacing of 36" o.c. 92.3 psf @ fastener spacing of 24" o.c. 133.9 psf @ fastener spacing of 18" o.c.
Fastener Pattern:	
Type:	#9-16 or #10-14 hex head wood screws with sealed washer. Fastener shall be of sufficient length to penetrate through the deck a minimum of 3/8". Fasteners are corrosion resistant as per FBC 2020 Section 1507.4.4.
At panel ends	@ 3.5"-5.5"-3.5" o.c. across panel width
At intermediate	@ 9" o.c. across panel width with two fasteners at each sidelap.
Sidelap Attachment: (Optional)	¼"-14 x 7/8" long SDS with washer @ 12" o.c. Recommended for roof slope less than 3:12. Fasteners are corrosion resistant as per FBC 2020 Section 1507.4.4.

PROPERTY RECORD CARD

General Information

Name:	MILLER JOHN R & JILL H LIFE ESTATE	**Alternate Key:**	1464242
Mailing Address:	229 W 9TH AVE MOUNT DORA, FL 32757-4814 *Update Mailing Address*	**Parcel Number:**	29-19-27-0010-029-00000
		Millage Group and City:	00MD Mount Dora
		2022 Total Certified Millage Rate:	18.8051
		Trash/Recycling/Water/Info:	*My Public Services Map*
Property Location:	229 W 9TH AVE MOUNT DORA FL, 32757	**Property Name:**	-- *Submit Property Name*
		School Information:	*School Locator & Bus Stop Map* *School Boundary Maps*
Property Description:	MOUNT DORA, 30-19-27 SW1/4 OF BLK 29 PB 3 PGS 37-43 ORB 5709 PG 1278 ORB 6050 PG 777		

NOTE: This property description is a condensed/abbreviated version of the original description as recorded on deeds or other legal instruments in the public records of the Lake County Clerk of Court. It may not include the Public Land Survey System's Section, Township, Range information or the county in which the property is located. It is intended to represent the land boundary only and does not include easements or other interests of record. This description should not be used for purposes of conveying property title. The Property Appraiser assumes no responsibility for the consequences of inappropriate uses or interpretations of the property description.

Land Data

Line	Land Use	Frontage	Depth	Notes	No. Units	Type	Class Value	Land Value
1	SINGLE FAMILY (0100)	140	140		19600.000	FD	$0.00	$215,817.00

Click here for Zoning Info Map **FEMA Flood**

Residential Building(s)

Building 1

Residential	Building Value: $271,673.00

Summary

Year Built: 1925	Total Living Area: 2616	Central A/C: Yes	Attached Garage: No
Bedrooms: 3	Full Bathrooms: 2	Half Bathrooms: 0	Fireplaces: 1

Incorrect Bedroom, Bath, or other information?

Section(s)

Section Type	Ext. Wall Type	No. Stories	Floor Area
PATIO (CAN)		2.00	288
FINISHED LIVING AREA (FLA)	Wood (01)	2.00	2616
OPEN PORCH FINISHED (OPF)		2.00	100
SCREEN PORCH UNFINISHED (SPU)		2.00	308

View Larger / Print / Save

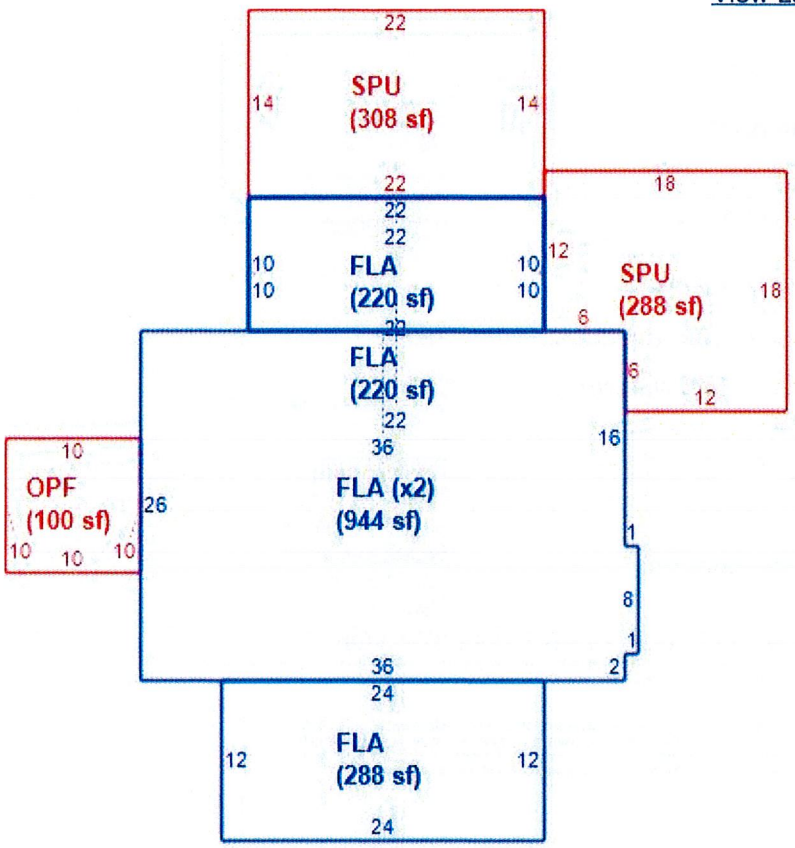

Miscellaneous Improvements

No.	Type	No. Units	Unit Type	Year	Depreciated Value
1	DETACHED GARAGE (DGF1)	360	SF	1924	$3,240.00
2	CARPORT/POLE SHED UNFINISHED (UCP2)	486	SF	1995	$1,021.00
3	ACCESSORY STRUCTURE DWELLING (ASF5)	232	SF	2015	$10,244.00
4	UTILITY BLDG FINISHED (UBF3)	120	SF	2015	$1,040.00

Sales History

NOTE: This section is not intended to be a complete chain of title. Additional official book/page numbers may be listed in the property description above and/or recorded and indexed with the Clerk of Court. Follow this link to search all documents by owner's name..

Book/Page	Sale Date	Instrument	Qualified/Unqualified	Vacant/Improved	Sale Price
6050 / 777	11/2022	Life Estate	Unqualified	Improved	$100.00
5709 / 1278	05/2021	Warranty Deed	Qualified	Improved	$595,000.00
5619 / 622	12/2020	Quit Claim Deed	Unqualified	Improved	$100.00
4527 / 887	09/2014	Warranty Deed	Unqualified	Improved	$100.00
635 / 985	01/1977	Misc Deed/Document	Qualified	Improved	$50,500.00

Click here to search for mortgages, liens, and other legal documents.

Values and Estimated Ad Valorem Taxes

Values shown below are 2023 WORKING VALUES that are subject to change until certified.
The Market Value listed below is not intended to represent the anticipated selling price of the property and should not be relied upon by any individual or entity as

a determination of current market value.

Tax Authority	Market Value	Assessed Value	Taxable Value	Millage	Estimated Taxes
LAKE COUNTY BCC GENERAL FUND	$503,035	$318,920	$268,920	5.0364	$1,354.39
SCHOOL BOARD STATE	$503,035	$318,920	$293,920	3.2500	$955.24
SCHOOL BOARD LOCAL	$503,035	$318,920	$293,920	2.9980	$881.17
LAKE COUNTY WATER AUTHORITY	$503,035	$318,920	$268,920	0.3083	$82.91
NORTH LAKE HOSPITAL DIST	$503,035	$318,920	$268,920	0.5000	$134.46
ST JOHNS RIVER FL WATER MGMT DIST	$503,035	$318,920	$268,920	0.1974	$53.08
CITY OF MOUNT DORA	$503,035	$318,920	$268,920	5.9603	$1,602.84
LAKE COUNTY MSTU AMBULANCE	$503,035	$318,920	$268,920	0.4629	$124.48
LAKE COUNTY VOTED DEBT SERVICE	$503,035	$318,920	$268,920	0.0918	$24.69
				Total: 18.8051	**Total:** $5,213.26

Exemptions Information

This property is benefitting from the following exemptions with a checkmark ✓

✓	Homestead Exemption (first exemption up to $25,000)	Learn More	View the Law
✓	Additional Homestead Exemption (up to an additional $25,000)	Learn More	View the Law
	Limited Income Senior Exemption (applied to county millage - up to $50,000)	Learn More	View the Law
	Limited Income Senior Exemption (applied to city millage - up to $25,000)	Learn More	View the Law
	Limited Income Senior 25 Year Residency (county millage only-exemption amount varies)	Learn More	View the Law
	Widow / Widower Exemption (up to $5,000)	Learn More	View the Law
	Blind Exemption (up to $500)	Learn More	View the Law
	Disability Exemption (up to $5,000)	Learn More	View the Law
	Total and Permanent Disability Exemption (amount varies)	Learn More	View the Law
	Veteran's Disability Exemption ($5,000)	Learn More	View the Law
	Veteran's Total and Permanent Disability Exemption (amount varies)	Learn More	View the Law
	Veteran's Combat Related Disability Exemption (amount varies)	Learn More	View the Law
	Deployed Servicemember Exemption (amount varies)	Learn More	View the Law
	First Responder Total and Permanent Disability Exemption (amount varies)	Learn More	View the Law
	Surviving Spouse of First Responder Exemption (amount varies)	Learn More	View the Law
	Conservation Exemption (amount varies)	Learn More	View the Law
	Tangible Personal Property Exemption (up to $25,000)	Learn More	View the Law
	Religious, Charitable, Institutional, and Organizational Exemptions (amount varies)	Learn More	View the Law
	Economic Development Exemption	Learn More	View the Law
	Government Exemption (amount varies)	Learn More	View the Law

NOTE: Information on this Property Record Card is compiled and used by the Lake County Property Appraiser for the sole purpose of ad valorem property tax assessment administration in accordance with the Florida Constitution, Statutes, and Administrative Code. The Lake County Property Appraiser makes no representations or warranties regarding the completeness and accuracy of the data herein, its use or interpretation, the fee or beneficial/equitable title ownership or encumbrances of the property, and assumes no liability associated with its use or misuse. See the posted Site Notice.

Copyright © 2014 Lake County Property Appraiser. All rights reserved.
Property data updated nightly.
Site Notice

INSTRUMENT#: 2022146070 OR BK 6050 PG 777 PAGES: 2 11/8/2022 9:52:47 AM
GARY J. COONEY, CLERK OF THE CIRCUIT COURT & COMPTROLLER, LAKE COUNTY, FLORIDA
REC FEES: $18.50 DEED DOC:$0.70

Prepared by/return to:
Michael J. Rogers, Esq.
Address: P. O. Drawer 2047
Eustis, FL 32727-2047

RETURN

-Property Appraisers Parcel I.D. # 29-19-27-0010-029-00000

-

THIS ENHANCED LIFE-ESTATE DEED, executed on this 2 day of November, 2022, by:

JOHN REX MILLER and JILL HENSLEY MILLER, husband and wife, whose post office address is 229 West 9th Avenue, Mount Dora, Florida 32757-4814, (hereinafter called the "Grantors"), to

JOHN REX MILLER and JILL HENSLEY MILLER, husband and wife, for so long as the survivor of them shall live, whose address is 229 West 9th Avenue, Mount Dora, Florida 32757-4814, Florida 32737 and then to **JOSHUA N. MILLER, a married man, and BRADY J. MILLER, a married man,** whose address is 229 West 9th Avenue, Mount Dora, Florida 32757-4814, Florida 32737, (hereinafter called "Grantees" and hereinafter called "Remaindermen" as to **JOSHUA N. MILLER and BRADY J. MILLER.**

(Whenever used herein the terms "Grantors", "Grantees" and "Remaindermen" include all the parties to this instrument and the heirs, legal representatives and assigns of individuals, and the successors and assigns of business entities.)

WITNESSETH: That the said Grantors, for and in consideration of the sum of Ten Dollars and whereof is hereby acknowledged, hereby grant, bargain, sell, alien, remise, release, convey, and confirm unto the Grantees, all that certain land situate in **LAKE** County, Florida, which land is more particularly described as follows:

The Southwest ¼ of Block 29, Section 30, Township 19 South Range 27 East, according to the Official Map of Mount Dora, recorded in Plat Book 3, Page 37, Public Records of Lake County, Florida.

GRANTORS RESERVE UNTO THEMSELVES, FOR AND DURING THEIR LIFETIME, THE EXCLUSIVE POSSESSION, USE AND ENJOYMENT OF THE PROPERTY DESCRIBED HEREIN WITHOUT ANY LIABILITY FOR WASTE. GRANTORS FURTHER RESERVE UNTO THEMSELVES, FOR AND DURING THEIR LIFETIME, THE RIGHT TO GIFT, SELL, CONVEY, LEASE, ENCUMBER BY MORTGAGE, PLEDGE, LIEN, OR OTHER-WISE MANAGE AND DISPOSE OF THE PROPERTY DESCRIBED HEREIN, IN WHOLE OR IN PART, SO AS TO TERMINATE THE INTERESTS OF THE REMAINDERMEN, AS GRANTORS IN THEIR SOLE DISCRETION MAY DECIDE, EXCEPT TO DISPOSE OF SAID PROPERTY, IF ANY, BY DEVISE UPON THEIR DEATHS. GRANTORS, FURTHER RESERVE UNTO THEMSELVES THE RIGHT TO CANCEL THIS DEED BY FURTHER CONVEYANCE THAT MAY DESTROY ANY AND ALL RIGHTS THE REMAINDERMEN MAY POSSESS UNDER THIS DEED. **JOSHUA N. MILLER AND BRADY J. MILLER** SHALL HOLD A REMAINDER INTEREST IN THE PROPERTY DESCRIBED THEIREIN AND UPON THE DEATHS OF THE GRANTORS, IF THE PROPERTY DESCRIBED THEIREIN HAS NOT BEEN PREVIOUSLY DISPOSED OF PRIOR TO THE GRANTORS' DEATHS, ALL RIGHT AND TITLE TO THE PROPERTY REMAINING SHALL FULLY VEST IN **JOSHUA N.**

MILLER AND BRADY J. MILLER, SUBJECT TO SUCH LIENS AND ENCUMBRANCES EXISTING AT THAT TIME.

SUBJECT TO easements, restrictions, and reservations of record, if any; however, this reference shall not operate to re-impose the same.

TOGETHER WITH all the tenements, hereditaments and appurtenances thereto belonging or in anywise appertaining.

TO HAVE AND TO HOLD the same in fee simple forever.

AND said Grantors hereby covenants with said Grantees that the Grantors is lawfully seized of said land in fee simple; that the Grantors has good right and lawful authority sell and convey said land, and hereby warrants the title to said land and will defend the same against the lawful claims of all persons whomsoever; and that said land is fee of all encumbrances, except taxes accruing subsequent to 2022.

This property is the homestead property of the Grantors. The legal description was supplied by the parties to this instrument, and the preparer of this deed does not guarantee either the accuracy of the description nor the state of title to the real property, there having been no survey or title search made.

In Witness Whereof, the said Grantors have signed and sealed these presents the day and year first above written.

Signed, Sealed and Delivered by both Grantors
in our presence:

Michael J. Rogers, Witness

JOHN REX MILLER

Michelle R. Baran, Witness

JILL HENSLEY MILLER

STATE OF FLORIDA
COUNTY OF LAKE

The foregoing instrument was acknowledged before me on the 2 day of November, 2022, by JOHN REX MILLER and JILL HENSLEY MILLER, by physical presence, and who are personally known to me ☐ or have produced a Florida Driver License ☒ as identification and who did not take an oath.

Notary Signature

MICHELLE R. BARAN
MY COMMISSION # HH 206392
EXPIRES: December 9, 2025

CITY OF MOUNT DORA

Planning and Development
510 N. Baker St.
Mount Dora, FL 32757
352-735-7113
plandev@cityofmountdora.com

DATE: August 23, 2023

TO: Historic Preservation Board

FROM: Michele Janiszewski, AICP, Senior Planner

RE: **Tab 2 - Certificate of Appropriateness; 302 W 6th Ave (Location); Remove Three Wood Windows and Replace with Vinyl Windows; John D and Helen P McCoy (Owners); Lowes Home Centers, c/o Megan (Applicant).**

Property Information:

Address:	302 W 6th	**Current Use:**	Residence
Zoning District:	R-3	**Land Use:**	Medium Density

Structure Information:

Date of Construction:	1922	**Style:**	Frame Vernacular
Structural System:	Wood Frame	**Foundation Type:**	Concrete Footing
Siding:	Stucco	**Stories:**	1.5
Roof Type:	Gable	**Chimneys:**	One

Background on Architectural Style:

The subject residence was constructed in the Frame Vernacular style. This style of buildings were first constructed by lay or self-taught carpenters to provide basic shelter without attention to architectural style. The buildings reflect locally available building materials, the skills and regional background of the builder and environmental conditions. Vernacular buildings were widely constructed in Mount Dora from the l 880s through the 1930s.

This style of architecture is characterized with horizontal wood siding (less common, wood shingles, board and Batten); gable roof with wood shingles during 19th Century, metal during late 19th century, and composition and asbestos shingles beginning in 1920s; and simple detailing including jig-sawn woodwork on porches, around eaves, corbeling on chimneys

Staff Analysis:

The applicant is seeking to remove three, wood windows and replace them with vinyl windows. The application indicates that grids will be provided on the windows.

The structure previously obtained a COA to install solar panels on March 27, 2019. The property also obtained COAs to install a screen enclosure and replace six windows with vinyl windows.

The 2008 Site Form indicates that the structure has lost a lot of its integrity and does not contribute to the Historic District.

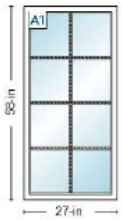

Pella 250 Series | Direct Set | Fixed Frame | 27 X 58 | White
Room Location: None Assigned

PROPOSED WIN

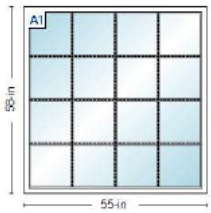

Pella 250 Series | Direct Set | Fixed Frame | 55 X 58 | White
Room Location: None Assigned

PROPOSED

<u>Staff Recommendation</u>:
Staff recommends approval of the application with the condition that grids be provided on the new windows to match the grids on the existing windows.

<u>Attachments</u>:
Photos
Window Guidelines
1987 Site Form
2008 Site Form
Application

CITY OF MOUNT DORA

302 W 6th Avenue
Site Photos

Windows Guidelines
Mount Dora Historic Design Guidelines

Applicable Standards: 2,3,6,9

2. ***Retention of Distinguishing Architectural Character***
3. ***Recognition of Historic Period***
6. ***Repair / Replacement of Deteriorated or Missing Architectural Features Based on Historic Evidence***
9. ***Compatible Contemporary Design for New Alteration/Additions***

The placement, design, and materials of windows are often a significant part of the architectural character of a building. Common historic windows in Mount Dora are double-hung sash in a 1/1, 2/2, 3/1 or multi-light/1 pattern, wood or steel casement, and commercial show windows. Non-historic windows include awning, jalousie, and pivot types. Awning and jalousie windows have been put to an unfortunate use as replacement windows or porch enclosures in many of Mount Dora's historic Craftsman Bungalows.

Under Standard 2 of the Interior Secretary's Standards, the visual role of historic window design and its detailing or craftsmanship would be carefully considered in planning window repair or replacement. Factors to consider include the size and number of windows in relation to a wall surface and their pattern or repetition; their overall design and detailing; their proximity to ground level and key entrances; their visibility on key elevations.

Whether to repair or replace windows is an issue that can pose considerable problems in rehabilitation. Distinctive windows are a significant part of the overall design of a building and should not be destroyed under Standard 6. Careful repair is the preferred method. If repair is not technically or economically feasible, new windows that match the original in size, general munin/mullion configuration, and reflective qualities may be substituted for missing or irreparable windows.

If 50% or more of a window is deteriorated or missing, then wholesale replacement of windows is allowable. But replacement windows must be selected with care. Small differences between replacement and historic windows can make a big difference in appearance. When choosing replacements the following features of the original windows should be used as criteria:

- trim detail
- size, shape of frame, sash
- location of meeting rail
- reveal or set-back of window from wall plane
- separate planes of two sash
- color, reflective qualities of glass
- muntin, mullion profiles, and configuration

If these criteria are fulfilled, the new windows need not be exact replicas of the originals. The Standards further permit new windows to be constructed of non-historic materials such as aluminum or vinyl and to have a tint of up to 10%. Of course, matching the original materials and visual qualities is always preferable. ***In general, changes to window openings should be avoided.***

Owners often wish to replace windows to create a new look, for energy efficiency, to decrease maintenance costs or because of problems operating existing units. Highly tinted windows, windows with reflective qualities or stock windows of both incompatible design and materials often result from such an approach and conflict with Standards 3, 6, and 9.

The rhythm of window and door openings is an important part of the character of buildings in Mount Dora. In some instances, new window or door openings should be located on non-significant walls. For commercial buildings these would be common or party walls or secondary elevations. For residential structures, these would be side or rear walls not readily visible from a main thoroughfare.

Recommendations:

1. Retain and repair window openings, frames, sash, glass, lintels, sills, pediments, architraves, hardware, awnings, and shutters where they contribute to the architectural and historic character of the building.

2. Conduct an in-depth survey of the conditions of existing windows early in rehabilitation planning so that repair and upgrading methods and possible replacement options can be fully explored.

3. Protect and maintain the wood and architectural metal which comprise the window frame, sash, muntin, and surrounds through appropriate surface treatments such as cleaning, rust removal, limited paint removal, and reapplication of protective coating systems.

4. Repair window frames and sash by patching, splicing, consolidating or otherwise reinforcing. Such repair may include replacement-in-kind of those parts that are either extensively deteriorated or are missing when there are surviving prototypes such as architraves, hood molds, sash, sills, and interior or exterior shutters and blinds.

5. Improve the thermal performance of existing windows and doors through adding or replacing weather-stripping and adding storm windows that are compatible with the character of the building and which do not damage window frames

6. Replace missing or irreparable windows on significant elevations with new windows that match the original in material, size, general muntin, mullion proportion and configuration, and reflective qualities of the glass.

7. Design and install new windows when the historic windows (frames, sash, and glazing) are completely missing. The replacement windows may be an accurate restoration using historical, pictorial, and physical documentation; or be a new design that is compatible with the window openings and historic character of the building.

8. Design and install additional windows on rear or other non-character-defining elevations if required by the new use. New window openings may also be cut into exposed party

walls. Such design should be compatible with the overall design of the building, but not duplicate the fenestration pattern and detailing of a character-defining elevation.

Avoid:

1. Introducing or changing the location or size of windows, and other openings that alter the architectural and historic character of a building.

2. Replacing window features on significant facades with historically and architecturally incompatible materials such as anodized aluminum, mirrored or tinted glass.

3. Removing window features that can be repaired where such features contribute to the historic and architectural character of a building.

4. Changing the size or arrangement of window panes, muntins, and rails where they contribute to the architectural and historic character of the building.

5. Installing on significant facades shutters, screens, blinds, security grills, and awnings which are historically inappropriate and detract from the building's character.

6. Replacing windows that contribute to the character of a building with those that are incompatible in size, configuration, and reflective qualities or which alter the setback relationship between window and wall.

7. Installing heating/air-conditioning units in window frames when the sash and frames may be damaged. Window installations should be considered only when all other visible heating/cooling systems would result in significant damage to historic materials. If installation proves necessary, window units should be placed on secondary elevations not readily visible from public thoroughfares.

8. Installing metal or fiber-glass awnings

9. Installing awnings that obscure architecturally significant detailing or features.

10. Replacing architecturally significant detailing, such as commercial canopies, with awnings.

11. Replacing windows that contribute to the character of a building with those that are incompatible in size, configuration, and reflective qualities or which alter the setback relationship between window and wall.

FLORIDA MASTER SITE FILE F 34-36A

Site Inventory Form

Site No.

Site Name "Bamboozle" - The Mallory House Survey Date 8709

Address of Site 302 W. 6th Ave., Mt. Dora Fl. 32757

Instruction for locating

Location Mt. Dora Sub (Subdivision Name) 57 (Block No.) 0000 (Lot No.)

County Lake

District name if applicable

Owner of Site: Name Knox, Walter B. Jr.

Address 302 W. 6th Ave., Mt. Dora 32757

Type of Ownership private Recording Date 8711

Recorder: Name & Title Barr, Melanie (Historic Preservation Consultant)

Address P.O. Box 17, Gainesville Fl. 32602

Condition of Site: (Check One)
- ___ Excellent
- x Good
- ___ Fair
- ___ Deteriorated

Integrity of Site: (Check One or More)
- x Altered
- ___ Unaltered
- x Original Use
- ___ Restored/Date
- ___ Moved/Date

Original Use private residence

Present Use private residence

Dates c. +1922

Cultural Phase American

Period 20th Century

NR Classification Category building Date Listed on NR

Threats to Site: (Check One or More)
- ___ Zoning
- ___ Development
- ___ Deterioration
- ___ Transportation
- ___ Fill
- ___ Dredge
- ___ Borrowing
- ___ Other (See Remarks Below)

Areas of Significance: Early Community Development

Significance:

This house was built around 1922 for Harry and Harriet Mallory, winter visitors to Mount Dora from West Springfield, Pa. Mrs. Mallory was active in the Mummer's Club, a division of The Women's Club in the 1920's. The Mummer's Club put on skits and acted out various theatrical roles with signs that read "This is a forest" or "This is a courtroom" for scenery. Mr. Mallory was the Commodore of The Yacht Club in 1926-27. Mrs. Mallory was also one of the founders of The Historical Society in 1953.

The house has had some severe alterations in recent years.

L 151,156,161; PS 9-30; CT 10-11; CD 24,26; MDT 6-20-30

Architect
Builder
Style and/or Period
Plan Type irregular: irregular
Exterior Fabric(s) stucco: textured
Structural System(s) wood frame: balloon
Porches
Orientation N
Foundation continous: stuccoed
Roof Type cross gable
Secondary Roof Structure(s) addition: shed
Roof Surfacing asphalt shingles
Window Type casement, wood
Ornament Exterior
Chimney stuccoed
Chimney Location W: slope
No. of Chimneys 1 No. of Stories 2
No. of Dormers Outbuildings
Surroundings
Map Reference (incl. scale & date) USGS Eustis 7.5 MIn. 1966 (PR1980)

Latitude and Longitude

Site Size (approx. acreage of property) LT1

LOCATION SKETCH OR MAP

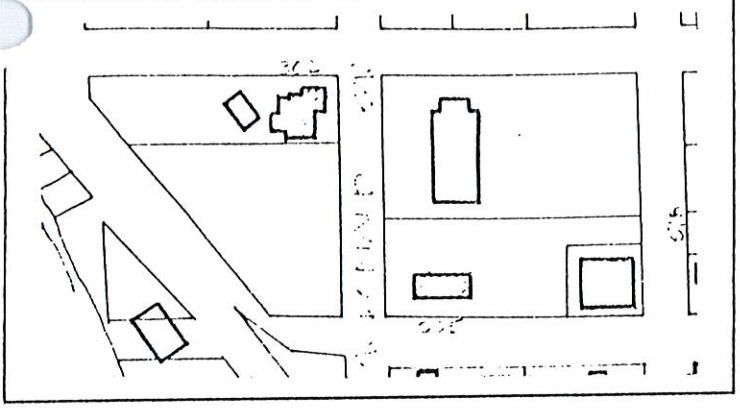

Township	Range	Section
19	27	30

UTM Coordinates:

Zone Easting Northing

Photographic Records Number F 34-36A
Please attach Photographic Print

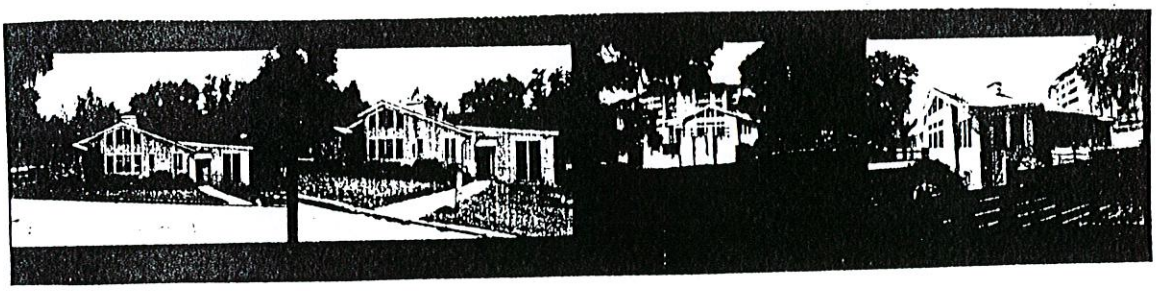

Florida Master Site File

HISTORICAL STRUCTURE FORM

Electronic Version 1.1.0

Site #8 LA00407
Recorder # 8
Field Date 3/15/2008
Form Date 3/15/2008
FormNo 200803
FormNo = Field Date (YYYYMM)

First Site Form Recorded for this Site? NO

GENERAL INFORMATION

Site Name (address if none) 302 W 6th Ave
Multiple Listing (DHR only)
Other Names >>
Survey or Project Name
Survey#
National Register Category Building(s)

LOCATION & IDENTIFICATION

Address

Street No.	Direction	Street Name	Street Type	Direction Suffix
302	West	6th	Avenue	

Cross Streets (nearest/ between)
City / Town (within 3 miles) Mount Dora
In Current City Limits? YES
County Lake
Tax Parcel #(s)
Subdivision Name
Block
Lot
Ownership
Name of Public Tract (e.g., park)
Route to (especially if no street address)

MAPPING

USGS 7.5' Map Name
Publication Date >> EUSTIS;1980
Township:
Range:
Section:
1/4 section:
>> 19S ;27E ;30;UNSP
Irregular Section Name:
Landgrant
UTM: Zone
Easting
Northing
Plat or Other Map (map's name, location)

DESCRIPTION

Style Frame Vernacular
Other Style
Exterior Plan Irregular
Other Exterior Plan
Number of Stories 1.5
Structural System(s) >> Wood frame
Other Structural System(s)
Foundation Type(s) >> Continuous
Other Foundation Types
Foundation Material(s) >> Poured Concrete Footing
Other Foundation Material(s)
Exterior Fabric(s) >> Stucco
Other Exterior Fabric(s)
Roof Type(s) >> Gable
Other Roof Type(s)
Roof Material(s) >>
Other Roof Material(s)
Roof Secondary Structure(s) (dormers etc) >>
Other Roof Secondary Structure(s)
Number of Chimneys 1
Chimney Material
Other Chimney Material(s)
Chimney Location(s)

HISTORICAL STRUCTURE FORM

8LA00407

DESCRIPTION (continued)

Window Descriptions casement 8, casement 6

Main Entrance Description (stylistic details)

Porches: #open ____ #closed ____ #incised ____ Location(s)

Porch Roof Types(s)

Exterior Ornament

Interior Plan Other Interior Plan

Condition Good

Structure Surroundings

Commercial: Residential: SOME of this category

Institutional: SOME of this category Undeveloped:

Ancillary Features (Number / type of outbuildings, major landscape features)

Archaeological Remains (describe):

If archaeological remains are present, was an Archaeological Site Form completed? ____

Narrative Description (optional)

HISTORY

Construction year 1922

Architect (last name first): Builder (last name first):

Changes in Locations or Conditions

Type of Change	Year of Change	Date Change Noted	Description of Changes
>>			

Structure Use History

Use Year Use Started Year Use Ended >> Private residence;1922;

Other Structure Uses

Ownership History (especially original owner, dates, profession, etc.)

RESEARCH METHODS

Research Methods >> Examine local tax records

Other research methods

SURVEYOR'S EVALUATION OF SITE

Potentially Eligible for a Local Register? NO Name of Local Register if Eligible

Idividually Eligible for National Register? NO

Potential Contributor to NR District? NO

Area(s) of historical significance >>

Other Historical Associations

Explanation of Evaluation (required) Because the resource has lost much of its historic integrity, it doesn't appear to warrant consideration for the NRHP on an individual basis and doesn't contribute to a historic district.

HISTORICAL STRUCTURE FORM

8LA00407

DOCUMENTATION (Photos, Plans, etc.)

Photographic Negatives or Other Collections Not Filed with FMSF, Including Field Notes, Plans, other Important Documents.

Document type: _____ Maintaining Organization: _____

File or Accession #: _____ Descriptive Information: _____

>>

RECORDER INFORMATION

Recorder Name (Last, First) Bland, Myles

Recorder Address / Phone 4104 St. Augustine Road Jacksonville, FL

Recorder Affiliation Bland & Associates, Inc Other Affiliation _____

Is a Text-Only Supplement File Attached (Surveyor Only)? NO

****** MASTER SITE FILE USE ONLY ******

SHPO's Evaluation of Resource

_____ Date _____

Cultural Resource Type: SS

Electronic Form Used: S110

Form Type Code: NORM

Form Quality Ranking: NEW

Form Status Code: SCAT

Supplement Information Status: NO SUPPLEMENT

Supplement File Status: NO SUPPLEMENT FILE

FMSF Staffer: _____

Computer Entry Date: 5/20/2008

Form Comments: _____

REQUIRED PAPER ATTACHMENTS	(1) USGS 7.5" MAP WITH STRUCTURE PINPOINTED IN RED (2) LARGE SCALE STREET OR PLAT MAP (3) PHOTO OF MAIN FACADE, B&W, AT LEAST 3"X5"

LA00407-200803

Supplementary Printout

> **USGS map name/year of publication or revision:**
EUSTIS;1980

> **Township/Range/Section/Qtr:**
19S ;27E ;30;UNSP

> **Structural system(s):**
Wood frame

> **Foundation types:**
Continuous

> **Foundation materials:**
Poured Concrete Footing

> **Exterior fabrics:**
Stucco

> **Roof types:**
Gable

> **Roof materials:**

> **Roof secondary structures (dormers etc):**

> **Change status/year changed/date noted/nature:**

> **Original, intermediate, present uses/year started/year ended:**
Private residence;1922;

> **Research methods:**
Examine local tax records
FL Master Site File-Cultural Resources
Pedestrian

> **Area(s) of historical significance:**

> **Repositories: Collection/Housed/Accession#/Describe**

> **[Other name(s)]:**

8

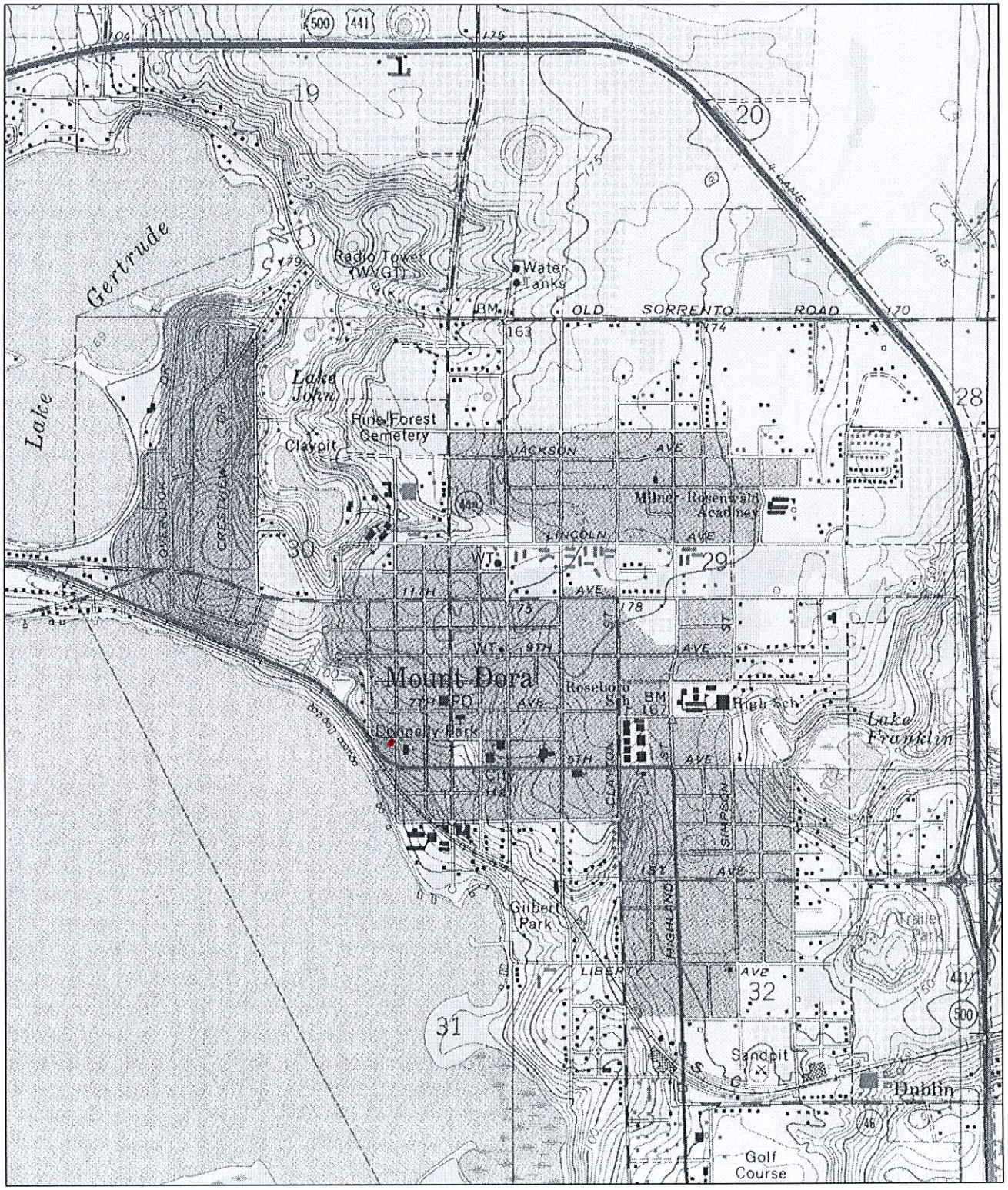

N

0 0.5 Mi

0 2000 Ft

Map provided by MyTopo.com

LA401

Lake County, Florida

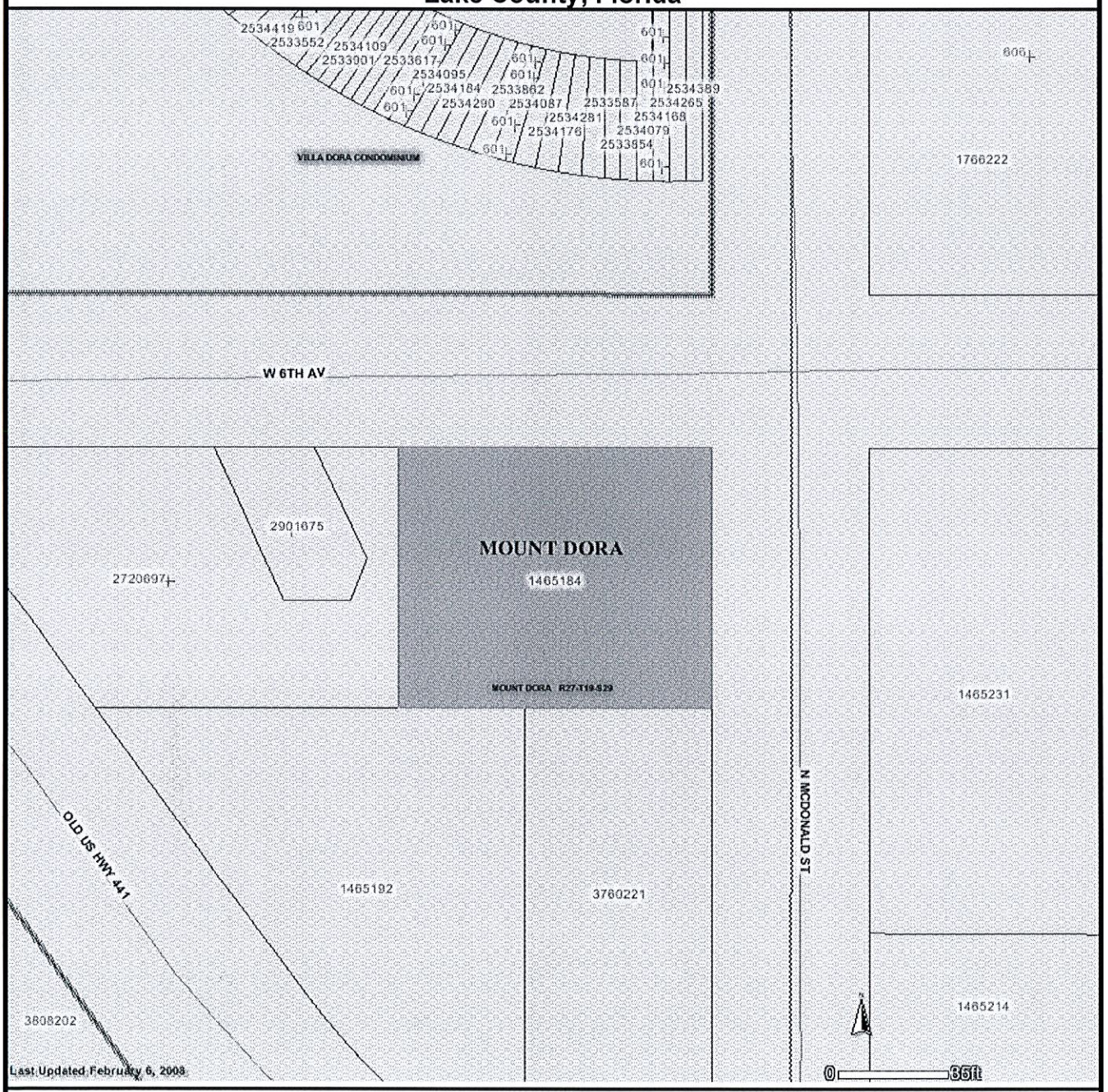

LEGEND

- Highlighted Feature
- LAKE APOPKA LDR
- PARCELS
- ALTERNATE KEY NUMBERS
- STRUCTURE/ADDRESS
- COUNTY PROPERTY
- STREETS
  - BUILT
  - PLATTED NOT BUILT
- CITY LIMITS
  - ASTATULA
  - CLERMONT
  - EUSTIS (cont)
  - FRUITLAND PARK
  - GROVELAND
  - HOWEY-IN-THE-HILLS
  - LADY LAKE
  - LEESBURG
  - MASCOTTE
  - MINNEOLA
  - MONTVERDE
  - MOUNT DORA
  - TAVARES (cont)

RN8
LA407

8

LA
407

RECEIVED
By Michele Janiszewski at 10:34 am, Aug 17, 2023

CITY OF MOUNT DORA

Planning and Development
510 N. Baker St.
Mount Dora, FL 32757
352-735-7113
plandev@cityofmountdora.com

APPLICATION FOR CERTIFICATE OF APPROPRIATENESS
Renovations, Additions and New Construction

Subject Property Address: 302 W 6th Ave

Property Owner: John McCloy

Applicant: Megan - Lowe's Home Centers

Applicant's Mailing Address: PO BOX 621497 Oviedo, FL 32762

Applicant's Phone Number: 352-300-3360

Applicant's Email Address: Permits@PermitsplusFL.com

Full Description of Proposed Alteration(s) or Construction including materials; please attach additional documentation if needed: REPLACE 3 WINDOWS SIZE FOR SIZE ON SFR CHANGING FROM WOOD TO VINYL WINDOWS WITH GRIDS

Current Building Use (e.g. residential or commercial): Residential

Is there currently a chimney on the building? No

If so, will the chimney be affected? No

Required Documentation:

Renovations or Additions:

1. Property Record Card
2. Survey
3. Elevation drawings of each side of the building affected by the proposed work
   a. Drawings must be to scale and clearly illustrate the detail of the work proposed
   b. (2) Drawings labeled with existing and proposed
4. Materials Listing or Cut Sheet
5. Photographs of existing structure
6. $100 Application Fee

New Construction on Undeveloped Land:

1. Survey
2. Elevations of the Surrounding Structures which will be influenced by New Structure
3. Proposed Design(s) of New Structure
4. Intended Materials to be Used on Exterior of Structure
5. $150 Application Fee

Demolition Requests: Please see separate application for demolition requests.

PLEASE NOTE - APPLICATIONS MUST BE RECEIVED THREE WEEKS PRIOR TO THE MEETING.
INCOMPLETE APPLICATIONS WILL NOT BE PROCESSED.

Note: This application is for a Certificate of Appropriateness from the Historic Preservation Board only. The proposed work must also meet Zoning and Building Code Requirements; additional permits may be required. Submission of the application implies permission is granted to the City of Mount Dora to inspect and document any necessary information needed to process this request.

Planning and Development
510 N. Baker St.
Mount Dora, FL 32757
352-735-7113
plandev@cityofmountdora.com

Land Development Code
3.6.4 Certificate of appropriateness.

1. *Basic requirements.*

   a. *Certificate of appropriateness required.*
      1) No building, structure, appurtenance, improvement or landscape feature within the City of Mount Dora, which has been designated a historic site, will be erected, altered, restored, renovated, excavated, relocated, or demolished until a certificate of appropriateness regarding any exterior architectural features, landscape features, or site improvements has been approved under the procedures in this section.
      2) A certificate of appropriateness shall be required for the erection, alteration, restoration, renovation, excavation, relocation, or demolition of any building, structure or appurtenance within any historic district established by the City of Mount Dora under the procedures specified in this ordinance.
      3) A certificate of appropriateness shall be required for any material change in existing walls, fences and sidewalks or construction of new walls, fences and sidewalks.
   b. *Architectural features.* Architectural features include, but are not limited to, the architectural style, scale, massing, siting, general design and general arrangement of the exterior of the building or structure, including the type, style of roofs, windows, doors and appurtenances.
   c. *Landscape features.* Landscape features and site improvements will include, but are not limited to, walls, fences, courtyards, signs, and exterior lighting.
   d. *Plan approval required.* No certificate of appropriateness will be approved unless the architectural plans for said construction, reconstruction, relocation, alteration, excavation, restoration, renovation, or demolition are approved by the board.
   e. *Relocation.* Relocation of a building or structure will include, but not be limited to, moving a building or structure into or within any historic district, and moving a historic building or structure within or out of the City of Mount Dora or any historic district.
   f. *Certificate not required.* A certificate of appropriateness will not be required for general, occasional maintenance of any historic buildings, structure or site, or any building or structure within a historic district. General, occasional maintenance will include, but is not limited to, lawn and landscaping care, painting and minor repairs that restore or maintain the historic site or current character of the building or structure. General, occasional maintenance will not include any of the activities described and defined in paragraphs 1. through 5. of this subsection, nor will it include an addition or change of awnings, signs, or alterations to porches and steps. A certificate of appropriateness will not be required for any interior alteration, construction, reconstruction, restoration, renovation or demolition. General, occasional maintenance and repair shall also include any ordinary maintenance which does not require a building permit for the city.

PROPERTY RECORD CARD

General Information

Name:	MC CLOY JOHN D & HELEN P	**Alternate Key:**	1465184
Mailing Address:	302 W 6TH AVE MOUNT DORA, FL 32757-5504 *Update Mailing Address*	**Parcel Number:**	29-19-27-0010-057-00000
		Millage Group and City:	0MD1 Mount Dora
		2022 Total Certified Millage Rate:	18.8051
		Trash/Recycling/Water/Info:	*My Public Services Map*
Property Location:	302 W 6TH AVE MOUNT DORA FL, 32757	**Property Name:**	-- *Submit Property Name*
		School Information:	*School Locator & Bus Stop Map* *School Boundary Maps*
Property Description:	MOUNT DORA, 30-19-27 E 100.69 FT OF N 85 FT OF BLK 57 PB 3 PGS 37-43 ORB 5241 PG 843		

NOTE: This property description is a condensed/abbreviated version of the original description as recorded on deeds or other legal instruments in the public records of the Lake County Clerk of Court. It may not include the Public Land Survey System's Section, Township, Range information or the county in which the property is located. It is intended to represent the land boundary only and does not include easements or other interests of record. This description should not be used for purposes of conveying property title. The Property Appraiser assumes no responsibility for the consequences of inappropriate uses or interpretations of the property description.

Land Data

Line	Land Use	Frontage	Depth	Notes	No. Units	Type	Class Value	Land Value
1	SINGLE FAMILY (0100)	101	85		8585.000	FD	$0.00	$124,700.00

Click here for Zoning Info Map **FEMA Flood**

Residential Building(s)

Building 1

Residential	Building Value: $364,165.00

Summary

Year Built: 1923	Total Living Area: 3050	Central A/C: Yes	Fireplaces: 1
Bedrooms: 4	Full Bathrooms: 2	Half Bathrooms: 1	

Incorrect Bedroom, Bath, or other information?

Section(s)

Section Type	Ext. Wall Type	No. Stories	Floor Area

Google Maps 601 W 6th Ave

Image capture: Jul 2023 © 2023 Google

EXISTING WINDOWS

Lowe's Custom Order Quote

Quote # 788309651

Quote Name: IHC McCloy windows

Date Printed: 8/5/2023

Customer:	John McCloy	**Store:**	(2577) LOWE'S OF MT. DORA, FL	**Item Total:**	3
Email:		**Associate:**	DAVID EUBANKS (3255915)	**PreSavings Total:**	$1,566.25
Address:	302 W 6TH AVE	**Address:**	18795 US HIGHWAY 441	**Freight Total:**	$0.00
	MOUNT DORA, FL 32757		MT. DORA, FL 32757-6741	**Labor Total:**	$0.00
Phone:	(281) 788-0591	**Phone:**	(352) 385-3600	**Pre-Tax Total:**	$1,331.31
				Savings Total:	($234.94)

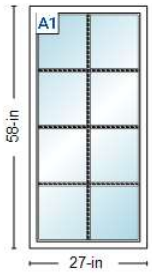

Pella 250 Series | Direct Set | Fixed Frame | 27 X 58 | White
Room Location: None Assigned

Product Warranty

PROPOSED WINDOWS

Line #	Item Summary	Production Time	Was Price	Now Price	Quantity	Total Savings	Pre-Tax Total
100-1	Pella 250 Series | Direct Set | Fixed Frame | 27 X 58 | White	28 days	$480.14	$408.12	2	($144.04)	$816.24

Valid thru: 07/07/2023

Begin Line 100 Description

---- Line 100-1 ----

A1: Non-Standard SizeNon-Standard Size Fixed Frame Direct Set. Frame Size: 27 X 58. Pella 250 Series Series. No Package
Southern

Standard
Vinyl
Block
Foam Insulated
3 1/4"
3 1/4"
Sill Adapter Included
Head Expander Included. White. White.
Glass: Insulated Dual Low-E SunDefense™ Low-E Insulating Glass Argon Non High Altitude.
Combination U-Factor 0.25
U-Factor 0.25
Combination SHGC 0.21
SHGC 0.21
VLT 0.50
CPD PEL-N-209-00247-00002
Satisfied Energy Star Zones Northern,North Central,South Central,Southern
Performance Class CW
PG 45
Calculated Positive DP Rating 45
Calculated Negative DP Rating 45
FPAS FL16811
Year Rated 08-11.

Remake: No
In-Store Pick-up
EA
07/14/2023
False
True
877-473-5527
. 28 Days. 943071
WTS Pella 250 Window IHC. 103848.
Grille: GBG
No Custom Grille
3/4" Contour
Traditional (2W4H)
White
White
Wrapping Information: Pella Recommended Clearance
Perimeter Length = 170".

End Line 100 Description

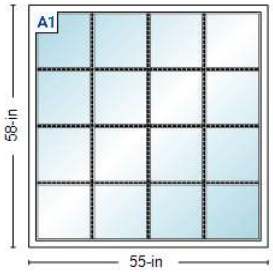

Pella 250 Series | Direct Set | Fixed Frame | 55 X 58 | White
Room Location: None Assigned

Product Warranty

PROPOSED WINDOWS

Line #	Item Summary	Production Time	Was Price	Now Price	Quantity	Total Savings	Pre-Tax Total
200-1	Pella 250 Series | Direct Set | Fixed Frame | 55 X 58 | White	28 days	$605.97	$515.07	1	($90.90)	$515.07

Valid thru: 07/07/2023

Begin Line 200 Description

---- Line 200-1 ----

A1: Non-Standard SizeNon-Standard Size Fixed Frame Direct Set. Frame Size: 55 X 58. Pella 250 Series Series. No Package
Southern

Standard
Vinyl
Block
Foam Insulated
3 1/4"
3 1/4"
Sill Adapter Included
Head Expander Included. White. White.
Glass: Insulated Dual Low-E SunDefense™ Low-E Insulating Glass Argon Non High Altitude.
CPD Not Rated
Satisfied Energy Star Zones None
Performance Class CW
PG 40
Calculated Positive DP Rating 40
Calculated Negative DP Rating 40
FPAS FL16811
Year Rated 08-11. Yes,

Remake: No
In-Store Pick-up
EA
07/14/2023
False
True
877-473-5527
. 28 Days. 943071
WTS Pella 250 Window IHC. 103848.
Grille: GBG
No Custom Grille
3/4" Contour
Traditional (4W4H)
White
White
Wrapping Information: Pella Recommended Clearance
Perimeter Length = 226"
Glazing Pressure = 40.

End Line 200 Description

Accepted by: _____ **Date:** 8/5/2023

Pre-Tax Total	$1,331.31

This quote is an estimate only and valid for 30 days on all regularly priced items. For promotional items please refer to the dates listed above. This estimate does not include tax or delivery charges. Estimated arrival will be determined at the time of purchase. All of the above quantities, dimensions, specifications and accessories have been verified and accepted by the customer.

****** Special order configured products returned or canceled after 72 hours from purchase are subject to a 20% restocking fee. ******

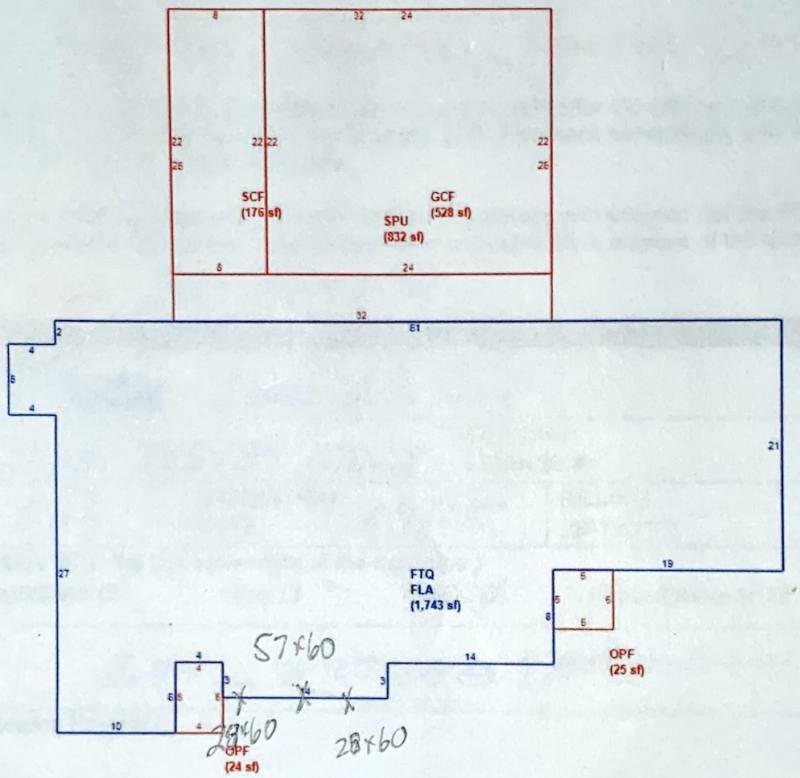

John McCloy
302 W. 6th Ave
Mount Dora FL 32757
281-788-0591

Product Approval
USER: Public User

Search Criteria

Refine Search

Code Version	2020	FL#	16811.1
Application Type	ALL	Product Manufacturer	ALL
Category	ALL	Subcategory	ALL
Application Status	ALL	Compliance Method	ALL
Quality Assurance Entity	ALL	Quality Assurance Entity Contract Expired	ALL
Product Model, Number or Name	ALL	Product Description	ALL
Approved for use in HVHZ	ALL	Approved for use outside HVHZ	ALL
Impact Resistant	ALL	Design Pressure	ALL
Other	ALL		

Search Results - Applications

FL#	Type	Manufacturer	Validated By	Status
FL16811-R4 History	Revision	Pella Corporation **FL#:** FL16811.1 **Model:** 250 Series Fixed Window **Description:** 108" x 60" vinyl non-impact single window **Category:** Windows **Subcategory:** Fixed	Terrence E. Lunn, PE (561) 625-6455	Approved *

*Approved by DBPR. Approvals by DBPR shall be reviewed and ratified by the POC and/or the Commission if necessary.

The State of Florida is an AA/EEO employer. Copyright 2007-2013 State of Florida. :: Privacy Statement :: Accessibility Statement :: Refund Statement

Under Florida law, email addresses are public records. If you do not want your e-mail address released in response to a public-records request, do not send electronic mail to this entity. Instead, contact the office by phone or by traditional mail. If you have any questions, please contact 850.487.1395. *Pursuant to Section 455.275(1), Florida Statutes, effective October 1, 2012, licensees licensed under Chapter 455, F.S. must provide the Department with an email address if they have one. The emails provided may be used for official communication with the licensee. However email addresses are public record. If you do not wish to supply a personal address, please provide the Department with an email address which can be made available to the public. To determine if you are a licensee under Chapter 455, F.S., please click here .

Product Approval Accepts:

Credit Card Safe securityMETRICS

Product Approval
USER: Public User

FL #	FL16811-R4
Application Type	Revision
Code Version	2020
Application Status	Approved
	*Approved by DBPR. Approvals by DBPR shall be reviewed and ratified by the POC and/or the Commission if necessary.
Comments	
Archived	☐
Product Manufacturer	Pella Corporation
Address/Phone/Email	102 Main St. Pella, IA 50219 (641) 621-6096 pellaproductapproval@pella.com
Authorized Signature	TROY FARR tbfarr@pella.com
Technical Representative Address/Phone/Email	
Quality Assurance Representative Address/Phone/Email	
Category	Windows
Subcategory	Fixed
Compliance Method	Certification Mark or Listing
Certification Agency	Window and Door Manufacturer Association
Validated By	Terrence E. Lunn, PE
	☑ Validation Checklist - Hardcopy Received

Referenced Standard and Year (of Standard)

Standard	Year
AAMA/WDMA/CSA 101/I.S.2/A440-08	2008
AAMA/WDMA/CSA 101/I.S.2/A440-11	2011

Equivalence of Product Standards Certified By	
Product Approval Method	Method 1 Option A
Date Submitted	10/30/2020
Date Validated	11/03/2020
Date Pending FBC Approval	
Date Approved	11/10/2020

GENERAL NOTES:

1. ALL FASTENERS SHALL BE IN ACCORDANCE WITH THESE DRAWINGS. SPECIFIED ANCHOR EMBED TO BASE MATERIAL SHALL BE BEYOND WALL FINISH OR STUCCO.
2. OPENINGS, BUCKING & BUCKING FASTENERS MUST BE PROPERLY DESIGNED & INSTALLED TO TRANSFER WIND LOADS TO THE STRUCTURE.
3. THESE NON-IMPACT RATED WINDOW SYSTEM INSTALLATIONS ARE IN ACCORDANCE WITH AND MEET THE REQUIREMENTS OF THE FLORIDA BUILDING CODE (FBC).
4. ALL ANCHORS SECURING WINDOW FRAME TO PRESSURE TREATED BUCKS OR WOOD FRAMING SHALL BE CAPABLE OF RESISTING CORROSION CAUSED BY THE PRESSURE TREATING CHEMICALS IN THE WOOD.
5. MATERIALS, INCLUDING BUT NOT LIMITED TO STEEL SCREWS, THAT COME INTO CONTACT WITH OTHER DISSIMILAR MATERIALS SHALL MEET THE REQUIREMENTS OF FLORIDA BUILDING CODE CHAPTER 20.
6. TO THE BEST OF OUR KNOWLEDGE, THE WINDOWS SHOWN HEREIN ARE CERTIFIED & QUALITY ASSURED BY A FLORIDA STATE APPROVED CERTIFICATION/QA ENTITY & SHALL BE LABELED IN ACCORDANCE WITH THE FBC AND THE 9N-3 FLORIDA BUILDING COMMISSION SPECIFICATIONS. WINDOW ASSEMBLY IS NOT PART OF THIS DRAWING AND SHALL BE IN ACCORDANCE WITH THE MANUFACTURER'S QUALITY ASSURANCE SPECIFICATIONS & TESTING REPORTS.
7. CERTIFICATION OF THESE WINDOW INSTALLATIONS SHALL BE CONSIDERED VOID IF ANY OF THE FOLLOWING APPLY: 1) THEY ARE INSTALLED WITHOUT A BUILDING PERMIT FROM THE APPLICABLE LOCAL BUILDING DEPARTMENT. 2) IF THEY ARE INSTALLED BY ANYONE OTHER THAN A LICENSED CONTRACTOR EXPERIENCED WITH WINDOW INSTALLATIONS. 3) IF CHANGES HAVE OCCURRED TO THE PRODUCT'S CERTIFICATION ENTITY'S CERTIFICATE THAT CAUSE THESE INSTALLATIONS TO BE INCORRECT OR INCONSISTENT WITH WHAT HAS BEEN TESTED.
8. THE LEAST DESIGN PRESSURE SPECIFIED EITHER IN THIS DRAWING OR IN THE PRODUCTS CERTIFICATION SHALL CONTROL FOR THE INSTALLED WINDOW.
9. THESE DRAWINGS CERTIFY THE WINDOW INSTALLATION ONLY. WATER PROOFING OF THE INSTALLED WINDOWS IS NOT PART OF THIS INSTALLATION CERTIFICATION. THAT RESPONSIBILITY SHALL BE THAT OF THE MANUFACTURER &/OR INSTALLER.

INSTALLATION EVALUATION IS BASED ON APPLICABLE ANCHOR STANDARDS AND/OR INFORMATION & RESULTS FROM APPLICABLE TEST REPORTS. THE FLORIDA BUILDING CODE VERSION CONSIDERED WITH THE EVALUATION WAS THAT IN FORCE AT THE TIME OF THE EVALUATION. IN THE EVENT OF CODE VERSION CHANGES/UPDATES OR IN THE EVENT THAT NEW OR ADDITIONAL TESTING IS COMPLETED ON THE REFERENCED PRODUCT, PRIOR TO STATING CODE COMPLIANCE WITH THE STATE, THE MANUFACTURER SHALL CONFIRM WITH THE INSTALLATION EVALUATION ENGINEER OF RECORD THAT THE INSTALLATIONS SPECIFIED HERE-IN ARE CURRENT WITH THE THEN CURRENT TESTING, CODE AND APPLICABLE STANDARDS.

FRAME ANCHOR REQUIREMENTS TABLE

OPENING TYPE (SUBSTRATE)	FRAME/CLIP/NAIL FIN TO OPENING FASTENER TYPE	MINIMUM EMBED	MINIMUM EDGE DIST.
(1) FRAME SCREWS			
MIN. 2X4 WOOD FRAME OR BUCK (MIN. GR. 3 & G=0.55)	NO. 10 SMS OR WOOD SCREW	1 1/4"	3/4"
MIN. 18 GA. 33 KSI METAL STUD	NO. 10 GR. 5 SELF TAP/DRILL SCREW	FULL	1/2"
MIN. 1/8" THK A36 STEEL	NO. 10 GR. 5 SELF TAP/DRILL SCREW	FULL	1/2"
MIN. 1/8" THK 6063-T5 ALUM.	NO. 10 GR. 5 SELF TAP/DRILL SCREW	FULL	1/2"
MIN. C-90 CMU OR 2500 PSI CONCRETE	(2) 1/4" CONCRETE SCREW	1 1/4"	2"
(1) INSTALLATION CLIP SCREWS			
MIN. 2X4 WOOD FRAME OR BUCK (MIN. GR. 3 & G=0.55)	NO. 10 SMS SCREW	1 1/4"	1/2"
MIN. 18 GA. 33 KSI METAL STUD	NO. 10 GR. 5 SELF TAP/DRILL SCREW	FULL	1/2"
MIN. 1/8" THK A36 STEEL	NO. 10 GR. 5 SELF TAP/DRILL SCREW	FULL	1/2"
MIN. 1/8" THK 6063-T5 ALUM.	NO. 10 GR. 5 SELF TAP/DRILL SCREW	FULL	1/2"
2500 PSI CONCRETE	(2) 3/16" CONCRETE SCREW	1 1/4"	2"
(3) NAILING FIN FASTENERS			
MIN. 2X4 WOOD FRAME OR BUCK (MIN. GR. 3 & G=0.55)	NO. 8 SMS SCREW	1 3/8"	1/2"
MIN. 2X4 WOOD FRAME OR BUCK (MIN. GR. 3 & G=0.55)	11 GA. ROOFING NAIL	1 3/8"	1/2"
MIN. 1/8" THK A36 STEEL	NO. 8 GR. 5 SELF TAP/DRILL SCREW	FULL	1/2"
MIN. 1/8" THK 6063-T5 ALUM.	NO. 8 GR. 5 SELF TAP/DRILL SCREW	FULL	1/2"

(1) FRAME AND INSTALLATION CLIP SCREWS SHALL BE A PAN OR HEX HEAD SCREW.
(2) CONCRETE SCREWS SHALL BE ELCO ULTRACONS (C.S.), ELCO CRETE-FLEX (S.S.), ITW RAMSET/RED HEAD TAPCONS (C.S. OR S.S.) OR HILTI KWIK-CON II (C.S OR S.S.).
(3) WHEN SCREWS ARE USED WITH THE NAIL FIN, THEY MUST BE A WAFFLE HEAD SCREW OR HAVE A FLAT WASHER AT THE SCREW HEAD.

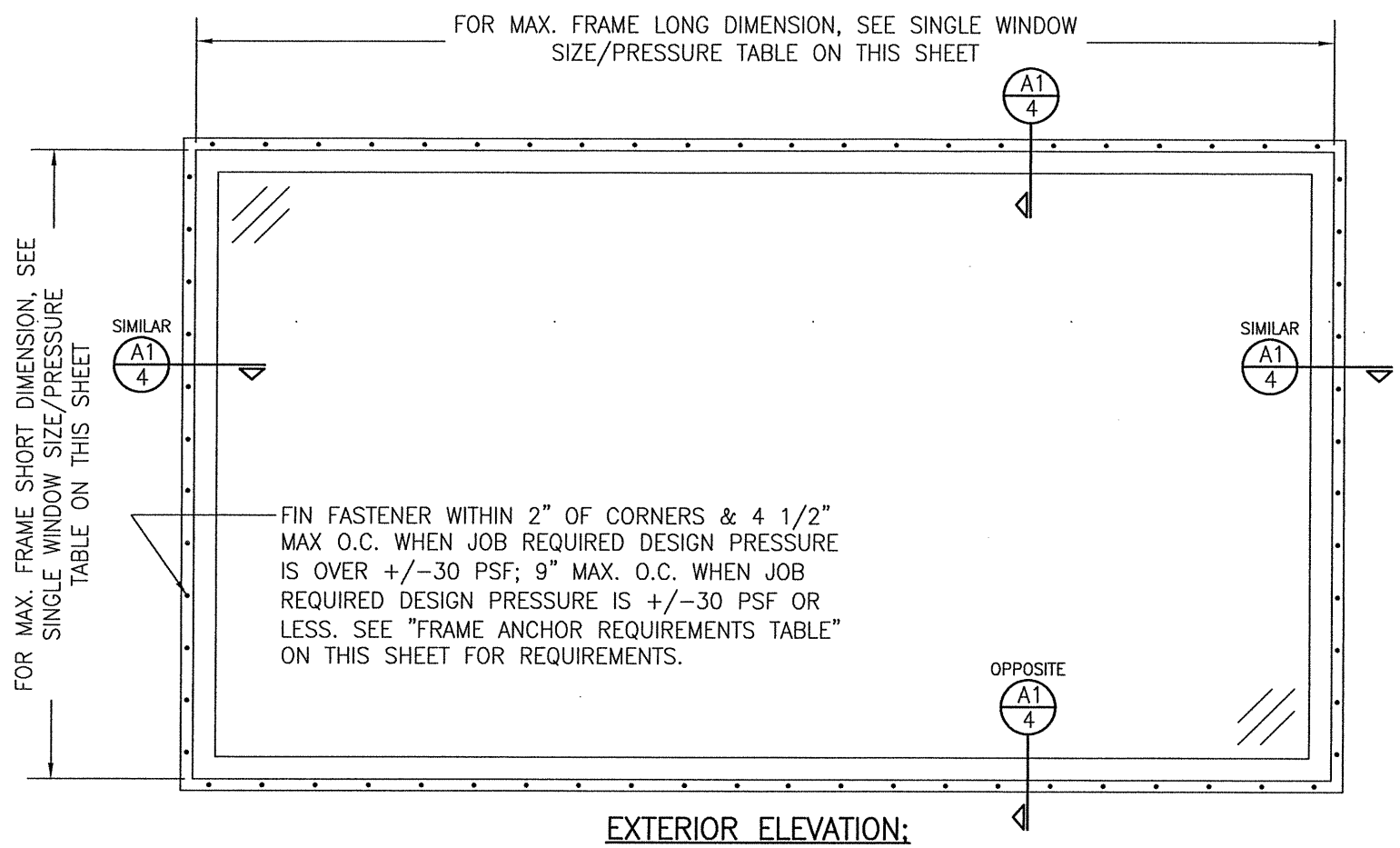

EXTERIOR ELEVATION; SINGLE WINDOW

SCALE: 3/4" = 1'-0"

(NAIL FIN MOUNT CONDITION)

ALLOWABLE SINGLE WINDOW SIZE/PRESSURE TABLE		
MAXIMUM FRAME LONG DIMENSION (IN.)	MAXIMUM FRAME SHORT DIMENSION (IN.)	ALLOWABLE PRESSURE (+/- PSF)
108	60	30
72	72	30
60	60	50
1. LONG DIMENSION MAY BE HORIZONTAL OR VERTICAL		

ALTERNATE ANCHOR/SUBSTRATE EVALUATION NOTE:
ALL ALTERNATE ANCHORS IN THEIR SPECIFIED SUBSTRATES HAVE BEEN ANALYZED IN ACCORDANCE WITH THEIR APPLICABLE STANDARD(S) AND ARE FOUND TO BE EQUIVALENT TO OR STRONGER THAN THE ANCHOR(S) USED IN TESTING WITH THIS PRODUCT.

THESE DRAWINGS ARE APPLICABLE ONLY TO THE PRODUCT SPECIFIED. THEY MAY NOT BE USED FOR THE ASSEMBLY AND/OR INSTALLATION OF ANY OTHER PRODUCT NOR MAY THEY BE USED FOR RATIONAL AND/OR LOCAL APPROVAL OF ANY PRODUCT NOT PRODUCED BY THE MANUFACTURER STATED ON THESE DRAWINGS.

DRAWN BY: W.R.M. | CHECKED BY: W.W.S.
PLOT: 1=16 | DATE: 02/04/14

NO.	REVISION DESCRIPTION	BY	DATE

DRAWING TITLE: 250 SERIES VINYL FIXED DIRECT GLAZED NON-IMPACT WINDOW

MANUFACTURER: PELLA CORPORATION, 102 MAIN STREET, PELLA, IA 50219, 641-621-1000

CONSULTANTS: W. W. SCHAEFER ENGINEERING & CONSULTING, P.A. (CA 6809)
7480 150TH COURT NORTH
PALM BEACH GARDENS, FL 33418
PHONE: 561-744-3424

CERTIFICATION: NOV 0 2 2020
WARREN W. SCHAEFER, P.E. P.E. NO. 44135

WARREN W. SCHAEFER ★ LICENSE No. 44135 ★ STATE OF FLORIDA ★ PROFESSIONAL ENGINEER

DRAWING NO. 1866 | REV.
SHEET NO. 1 OF 4

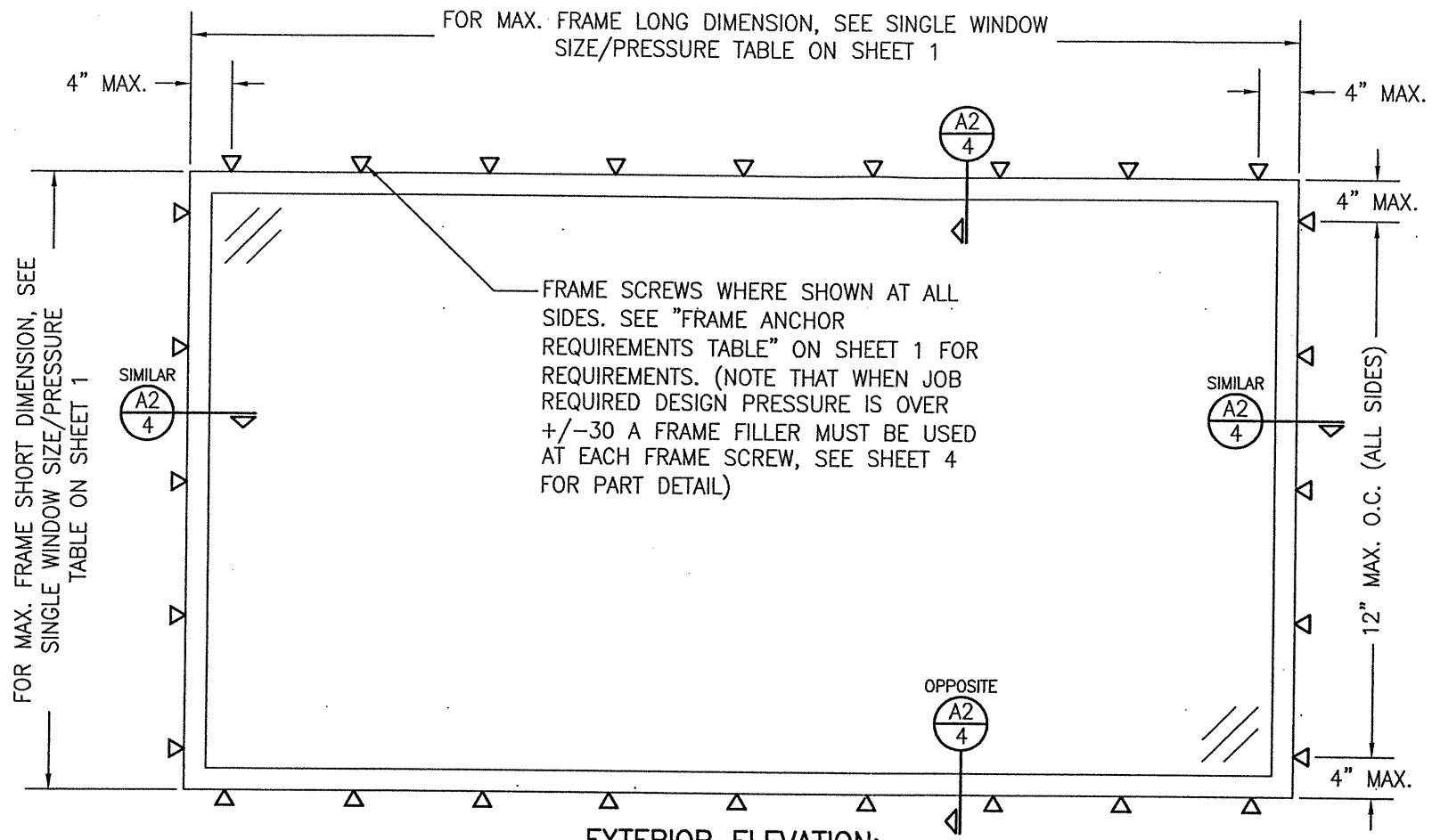

EXTERIOR ELEVATION:
SINGLE WINDOW
SCALE: 3/4" = 1'-0"
(FRAME SCREW MOUNT CONDITION)

DRAWN BY: W.R.M.	CHECKED BY: W.W.S.
PLOT: 1=16	DATE: 02/04/14

NO.	REVISION DESCRIPTION	BY	DATE

DRAWING TITLE
250 SERIES VINYL FIXED DIRECT GLAZED NON-IMPACT WINDOW

MANUFACTURER
PELLA CORPORATION
102 MAIN STREET
PELLA, IA 50219
641-621-1000

CONSULTANTS
W. W. SCHAEFER ENGINEERING & CONSULTING, P.A. (CA 6809)
7480 150TH COURT NORTH
PALM BEACH GARDENS, FL 33418
PHONE: 561-744-3424

CERTIFICATION
WARREN W. SCHAEFER, P.E.
P.E. NO. 44135
NOV 0 2 2020

WARREN W. SCHAEFER ★ LICENSE No. 44135 ★ STATE OF FLORIDA ★ PROFESSIONAL ENGINEER

DRAWING NO. 1866
REV.
SHEET NO. 2 OF 4

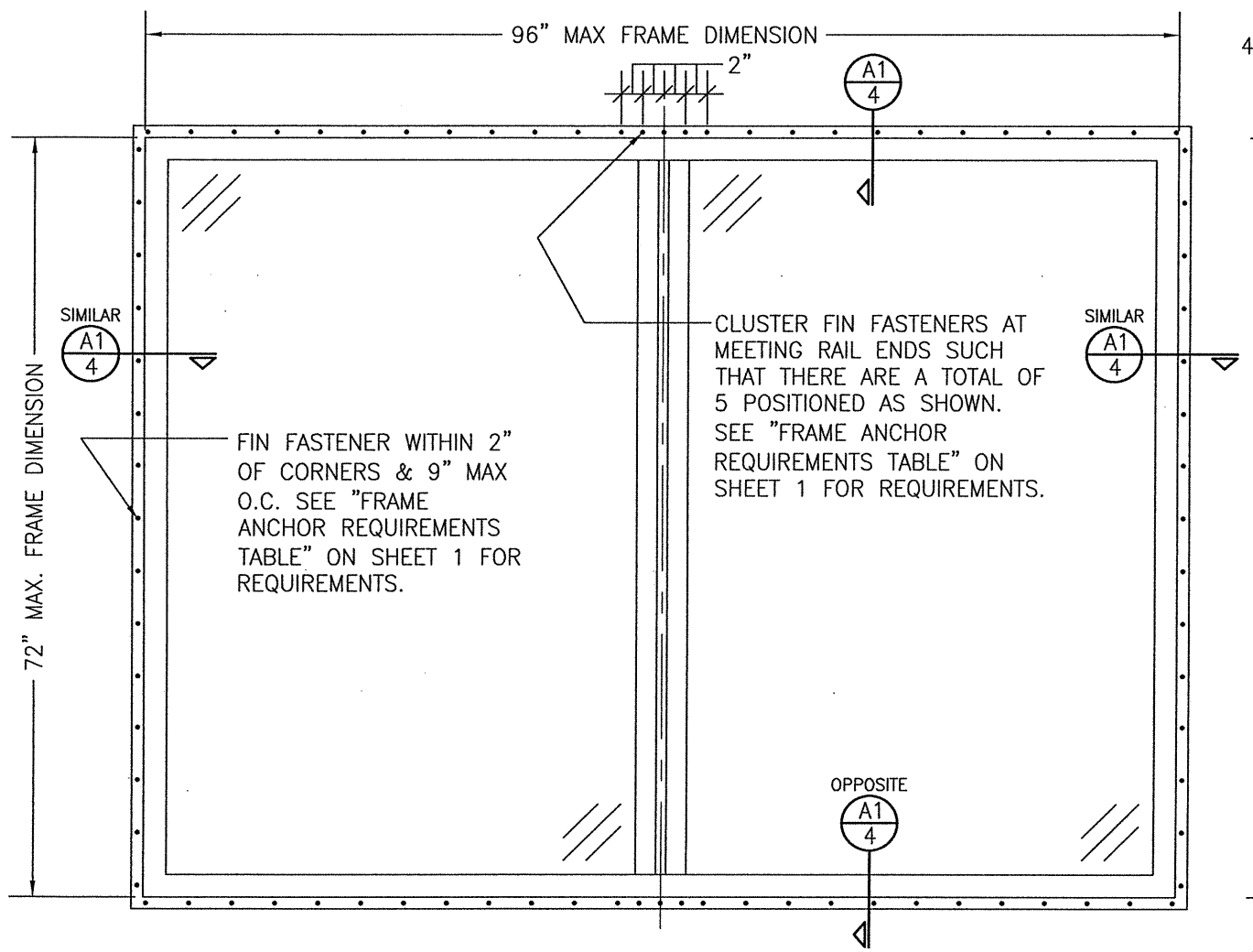

EXTERIOR ELEVATION:
MULTIPLE WINDOWS IN ONE FRAME
SCALE: 3/4" = 1'-0"
(NAIL FIN MOUNT CONDITION)

ALLOWABLE DESIGN PRESSURE (MULTIPLE WINDOWS IN ONE FRAME)
+/-30 PSF

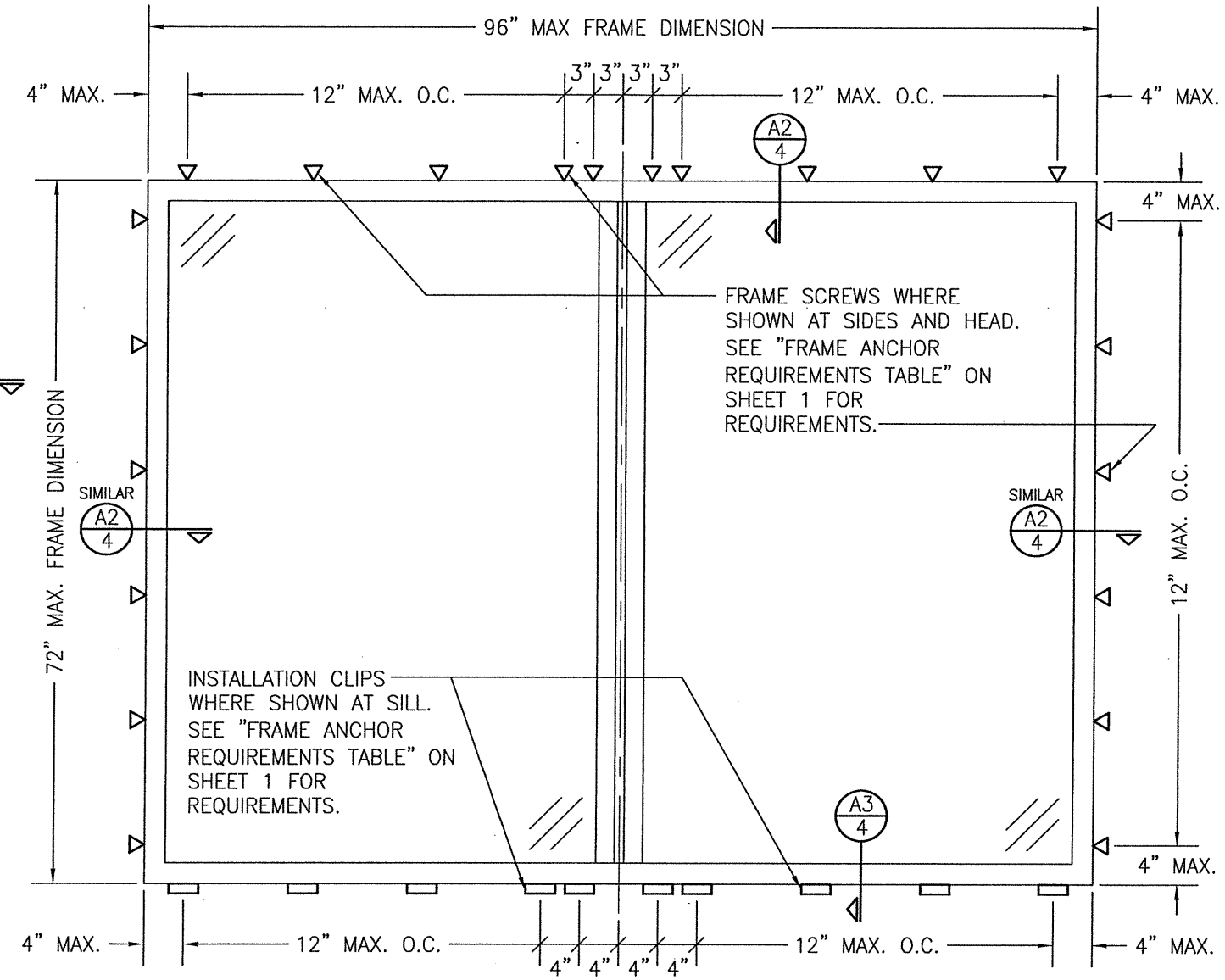

EXTERIOR ELEVATION:
MULTIPLE WINDOWS IN ONE FRAME
SCALE: 3/4" = 1'-0"
(FRAME SCREW AND CLIP MOUNT CONDITION)

MULTIPLE UNIT NOTES:

1. MULLION MAY BE HORIZONTAL OR VERTICAL PROVIDING UNIT SIZES ARE RESTRICTED AS SHOWN IN THIS ELEVATION.
2. IF VERTICALLY STACKED, THE MANUFACTURER &/OR INSTALLER SHALL INSURE THAT THE DEAD LOAD WEIGHT OF THE ABOVE WINDOWS CAN NOT CAUSE UNDO FAILURE TO THE BELOW WINDOWS.
3. THERE IS NO LIMIT ON THE NUMBER OF WINDOWS THAT MAY BE COMBINED IN ONE DIRECTION INTO ONE OPENING PROVIDING THE OPENING IS DESIGNED TO SUPPORT ALL LOADS TRANSFERRED FROM THE WINDOWS & THEIR MULLIONS.

WARREN W. SCHAEFER LICENSE No. 44135 STATE OF FLORIDA PROFESSIONAL ENGINEER

DRAWN BY: W.R.M.	CHECKED BY: W.W.S.
PLOT: 1=16	DATE: 02/04/14

NO.	REVISION DESCRIPTION	BY	DATE

DRAWING TITLE
250 SERIES VINYL FIXED DIRECT GLAZED NON-IMPACT WINDOW

MANUFACTURER
PELLA CORPORATION
102 MAIN STREET
PELLA, IA 50219
641-621-1000

CONSULTANTS
W. W. SCHAEFER ENGINEERING & CONSULTING, P.A. (CA 6809)
7480 150TH COURT NORTH
PALM BEACH GARDENS, FL 33418
PHONE: 561-744-3424

CERTIFICATION
NOV 02 2020
WARREN W. SCHAEFER, P.E.
P.E. NO. 44135

DRAWING NO. 1866
REV.
SHEET NO. 3 OF 4

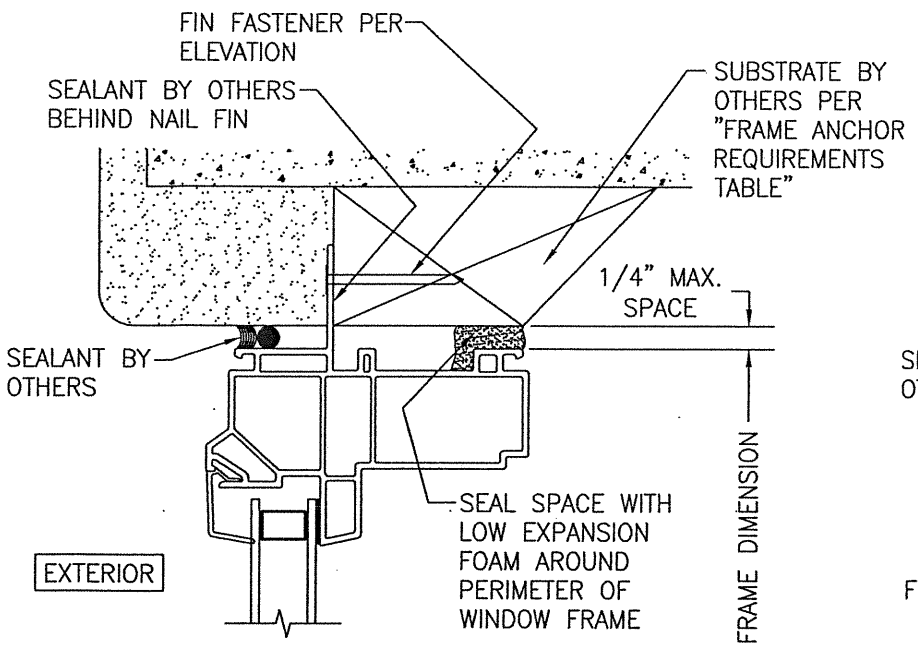

SECTION A1/4
SCALE: 3/4 FULL
(NAIL FIN MOUNT)

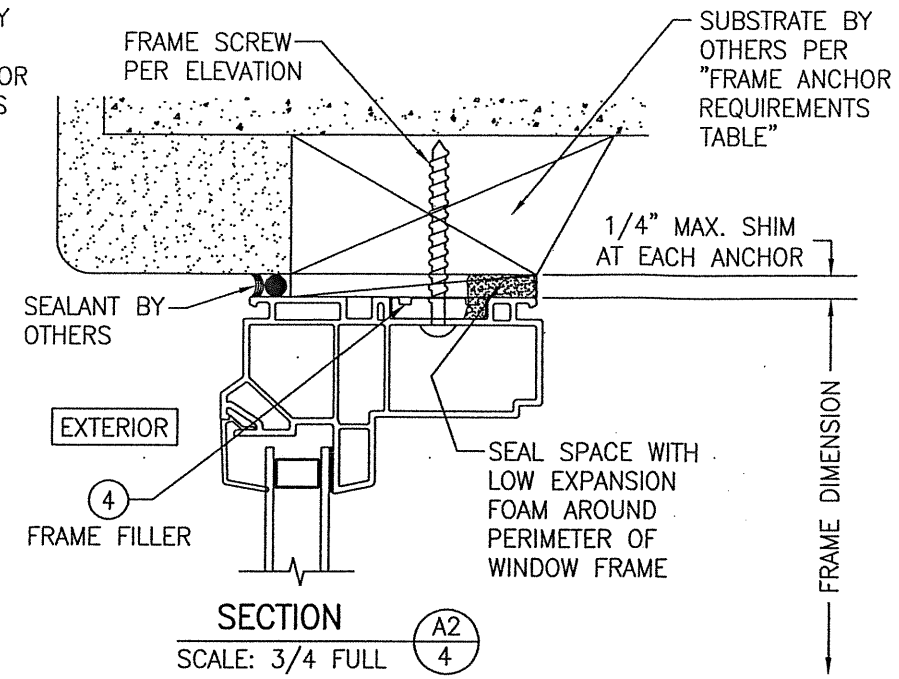

SECTION A2/4
SCALE: 3/4 FULL
(FRAME SCREW MOUNT CONDITION)

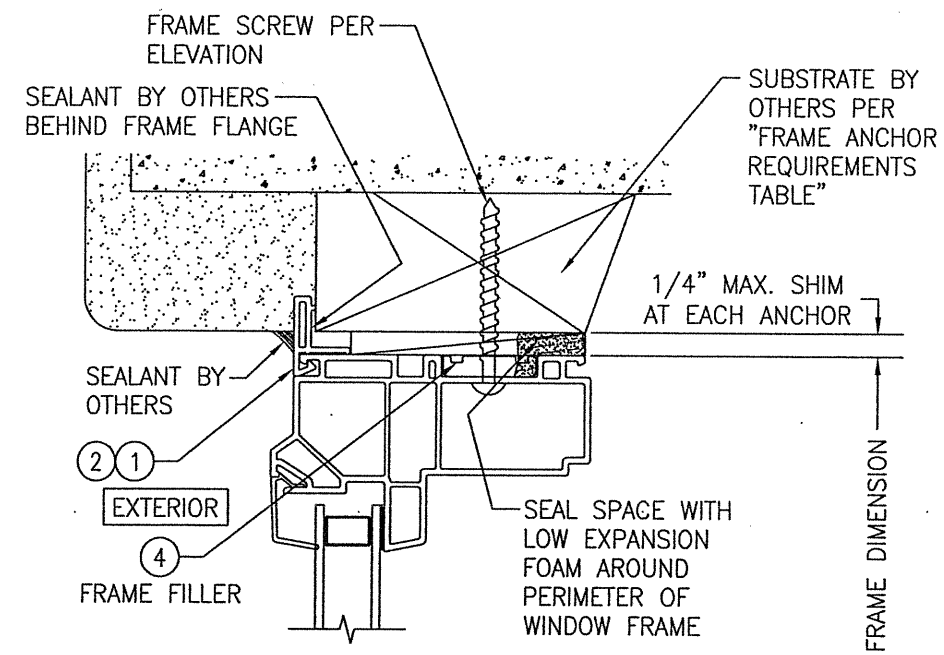

ALTERNATE SECTION A2/4
SCALE: 1/2 FULL
(FRAME SCREW MOUNT CONDITION WITH FLANGE)

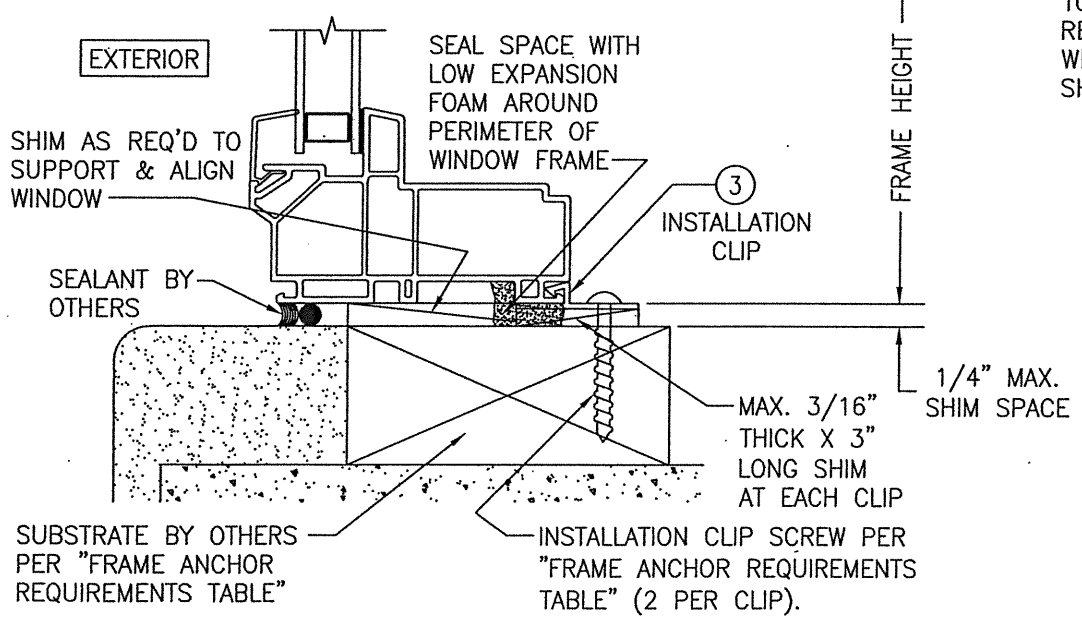

SECTION A3/4
SCALE: 3/4 FULL
(INSTALLATION CLIP MOUNT CONDITION)

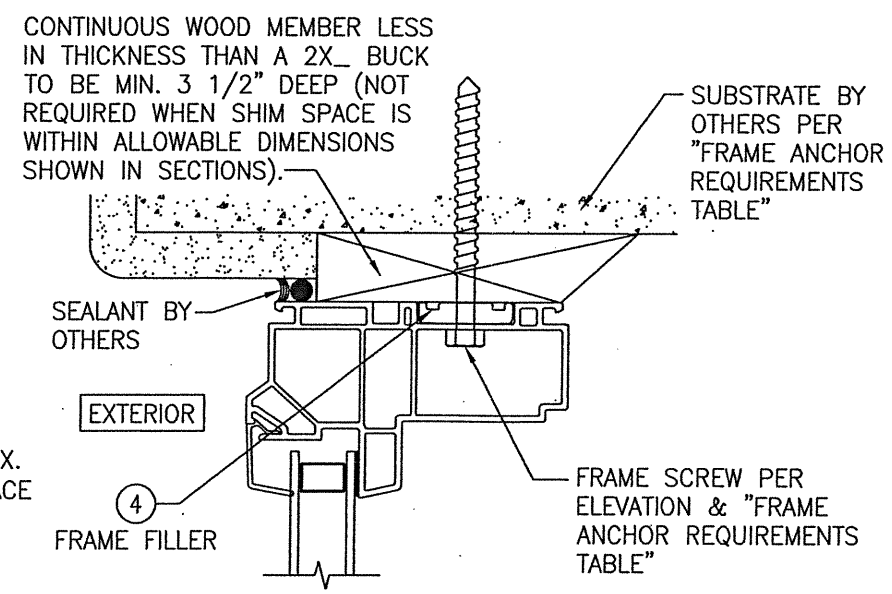

OPTIONAL DIRECT MOUNT DETAIL TO SUBSTRATE WITH SPACER
(HEAD SECTION SHOWN; SIDES ARE INSTALLED THE SAME)
(DIRECT MOUNT CONDITION IS NOT APPLICABLE AT SILL)
(FOR DETAIL NOT SHOWN, SEE OTHER SECTIONS)

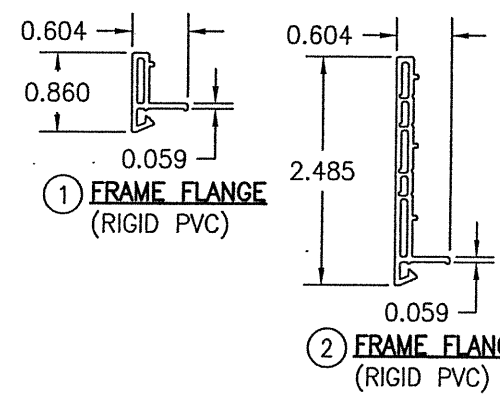

1 FRAME FLANGE
(RIGID PVC)

2 FRAME FLANGE
(RIGID PVC)

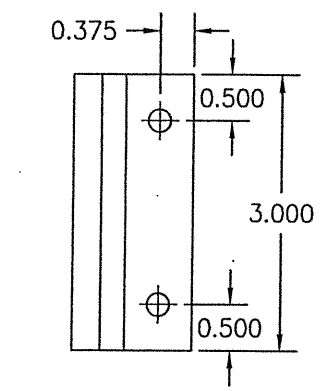

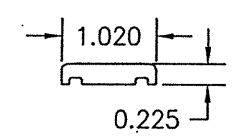

LENGTH = 3.000"

4 FRAME FILLER
(RIGID PVC)

(NOTE THAT WHEN JOB REQUIRED DESIGN PRESSURE IS OVER +/-30 A FRAME FILLER MUST BE USED AT EACH FRAME SCREW)

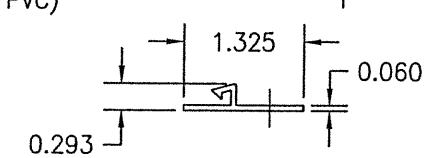

3 INSTALLATION CLIP
(RIGID PVC)

DRAWN BY: W.R.M.	CHECKED BY: W.W.S.
PLOT: 1=2	DATE: 02/04/14

NO.	REVISION DESCRIPTION	BY	DATE

DRAWING TITLE
250 SERIES VINYL FIXED DIRECT GLAZED NON-IMPACT WINDOW

MANUFACTURER
PELLA CORPORATION
102 MAIN STREET
PELLA, IA 50219
641-621-1000

CONSULTANTS
W. W. SCHAEFER ENGINEERING & CONSULTING, P.A. (CA 6809)
7480 150TH COURT NORTH
PALM BEACH GARDENS, FL 33418
PHONE: 561-744-3424

CERTIFICATION
NOV 0 2 2020
WARREN W. SCHAEFER, P.E. NO. 44135

DRAWING NO. 1866
REV.
SHEET NO. 4 OF 4

CITY OF MOUNT DORA

Planning and Development
510 N. Baker St.
Mount Dora, FL 32757
352-735-7113
plandev@cityofmountdora.com

DATE: August 23, 2023

TO: Historic Preservation Board

FROM: Michele Janiszewski, AICP, Senior Planner

RE: **Tab 3 - Certificate of Appropriateness; 138 E 5th Ave (Location); Construct a new building to house the Mount Dora Center of the Arts (Request); G3 MD, LLC (Owner); Mount Dora Center for the Arts (Applicant).**

Proposed Work: Construct a new, two-story mixed-use building containing approximately 4,000 square feet on Royellou Lane.

Summary of Proposed Commercial Structure

Site Area:	8,189 +/-sq. ft. (or 0.18 +/- acres)
Site Conditions:	Developed with two-story brick building and landscape pavers utilized as a parking area. Landscape pavers to be removed and developed with the proposed building.
Proposed Work:	Construct a new, two-story mixed-use building containing approximately 4,000 square feet on Royellou Lane. Existing building to remain.
Future Land Use:	Commercial
Zoning:	C-2 (Downtown Commercial)
Overlays:	Community Redevelopment Area Downtown Exempt District Historic Preservation Area
Setbacks:	*LDC* requirements: Front: 0 ft, Side: 0 ft, Rear 0 ft
Height:	*LDC* requirements: Maximum 35 feet Proposed: 24 feet
Building Size:	2,942 square feet (one story)
Roof Style:	Flat Roof with parapet walls
Exterior Finish:	Commercial Vernacular: Stucco Finish and Stone Veneer

Background on Commercial Vernacular:

Design of commercial buildings in Florida mirrored national trends. Most commercial buildings were concentrated in districts with high land values. Lot configuration, therefore, exerted great influence on the form and plan of commercial buildings. To exploit land value to the fullest, commercial buildings were constructed in close proximity to one another and designed to cover most of the lot. The side walls of one commercial building often formed party walls with adjacent buildings.

Most commercial buildings were rectangular in plan. One narrow elevation, facing the street, became the focus of the design and provided the building's identifying features. Facades were organized into distinct sections or zones, commonly containing one or two parts. The one-part facade generally was a one-story building. It was formed by a structural framework consisting of columns, bulkheads or kick-panels, and a cornice topped by a parapet. Large show windows were generally placed within this framework to display merchandise and light the interior.

Roofs were usually flat built-up types with parapets. Brick was frequently used in combination with cast iron. Beginning in the 1920s, two new masonry materials, hollow terracotta tile and concrete block, gained wide use in construction of commercial buildings. Stucco finishes and terracotta detailing became widespread.

Proposed Building:

Guidance from Mount Dora Historic Preservation Design Guidelines:

The guidelines for new construction require compatibility with the surrounding buildings. Compatibility is measured by comparing the design elements and architectural features of the proposed building to the surrounding buildings. This does not mean that the new building must match its surroundings, only that it be compatible and not detract from the significant historic elements of the area. The elements used to measure compatibility are listed below with a description of the standard and an analysis on its relation to the application.

1. **Setback:** Setback is the distance a building is located from property lines. Buildings in historic districts often share a common front and side setback. Commercial buildings are generally set directly on property lines, creating a wall effect. In locating new buildings, the side and rear setbacks should be maintained and aligned with the facades of surrounding historic buildings.
   The structure to the north of the property abuts Royellou Lane and the structure to the south is setback approximately seven (7) feet from Royellou Lane. The proposed building is situated between one (1) and four (4) feet from Royellou Lane, making it consistent with the abutting buildings.
2. **Proportion of openings:** Window openings in historic districts often share similar size, spacing, and shape. On many buildings, particularly the Colonial Revival and other classically inspired styles, they are stacked, with a narrow space between them. Other styles, particularly the Queen Anne, exhibit randomly placed openings. Storefronts have wide horizontal windows and little or no spacing between openings, providing a greater transparent area. In designing new construction, the proportion and spacing of openings on adjacent buildings should be maintained.
   The proposed building features large storefront windows on the first floor which is consistent with Commercial Vernacular Architecture. The buildings directly abutting the property do not feature large show windows due to their orientation (front façade oriented to 5th Avenue) and previous use (jailhouse). The other two buildings fronting the eastern side of Royellou have some large windows on their first floor.
3. **Horizontal Rhythms:** Repeated elements on neighboring buildings are characteristic of buildings in Florida. Divisions between upper and lower floors, uniform porch heights, and alignment of window and window sills are examples of such rhythms. New construction in historic districts should maintain or extend these strong shared streetscape elements in blocks where they appear.
   The proposed building offers a clear division between the floors. There are no porches on this block and the surrounding buildings do not have a consistent alignment of windows.
4. **Roof forms:** Similar roof form and pitch are characteristics in many historic buildings, early all residential buildings in districts have pitched roofs, with gable or hip the predominate type. Gambrel, pyramidal, and clipped gable (jerkinhead) are also found. In contrast, commercial buildings generally have flat roofs with parapet. Roof designs should be compatible with surrounding buildings. Sloped roofs with pitches similar to those of nearby buildings should be required for new residential construction, and flat roofs with the roof plane hidden from view on the front facade should be required for commercial construction.
   The proposed building features a flat roof with a parapet which is consistent with the

surrounding buildings and the roof form established in the guidelines for commercial buildings.

5. **Mass:** Mass relates to the height, width and depth of a building and its elements. A building is often composed of several different massings – think of it as a compilation of various building blocks. If there are similar massings in the area this should be taken into account.
6. **Materials:** Certain materials are characteristic of historic districts. Materials that are compatible in quality, color, texture, finish and dimension to those common to the district should be used.
   The building features brick and aluminum. The building to the north is brick and the buildings to the south feature concrete blocks, with and without stucco.
7. **Details:** Facia, soffit, eave and cornice trim, porch railings and brackets and other decorative details can provide a pattern and scale to historic buildings and areas.
   The second floor windows are adorned with segmental brick arches; a storefront and building cornice; recessed entries; bulkhead; transom windows; and decorative brick banding.
8. **Proportion:** Proportion is the ratio of one dimension to another. Individual elements of the building, such as windows, doors and additions, should be proportional to each other and the building.
9. **Scale:** refers to the apparent relationship between two entities, such as the relationship between the size of an addition and the building to which it is attached.
10. **Rhythm:** On the facade of a building a rhythm can be created by the alternating of wall (solid) and window (void). On the streetscape, a rhythm is created by the alternating of building and open space. It is important to be sensitive to these patterns.
11. **Climate Control Elements:** Raised foundations, overhanging eaves, porches, awnings, orientation of the building and other features were historically incorporated into our historic structures and provide a common character to the streetscape.
12. **Landscaping Elements:** Specific types of native vegetation such as live oaks, shrubs, or expanses of grassy lawns may predominate in an area. Architectural elements such as fences, walls, garden architecture, outbuildings, or vine-covered trellises and pergolas often contribute to the visual continuity in our historic neighborhoods.

Guidance from Land Development Code (LDC)

LDC Section 3.4.6 (2)(b) states that it is also the intent to promote visually compatible, contemporary designs that are harmonious with the exterior architectural and landscape features of adjacent, neighboring or visually related buildings, structures, sites and streetscapes. Visual compatibility will be defined in terms of the following criteria:

1. *Height.* The height of proposed buildings or modifications will be visually compatible in comparison or relation to the height of existing structures and buildings.
2. *Front facade proportion.* The front facade of each building or structure will be visually compatible with and in direct relationship to the width of the building and to the height of the front elevation of other adjacent or adjoining buildings within a historic preservation review area.
3. *Proportion of openings (windows and doors).* The openings of any building within a historic preservation review area will be visually compatible with the openings exemplified by the prevailing historic architectural styles within the historic preservation review area.

The relationship of the width of windows and doors to the height of windows and doors among buildings within the historic preservation review area will be visually compatible.

4. *Rhythm of solids to voids—Front facades.* The relationship of solids to voids in the front facade of a building or structure will be visually compatible with the front facades of historic buildings or structures within the historic preservation review area.
5. *Rhythm of buildings on streets.* The relationship of building(s) to open space between it or them and adjoining building(s) will be visually compatible with the relationship between historic sites, buildings, structures within a historic preservation review area.
6. *Rhythm of entrance and/or porch projections.* The relationship of entrances and porch projections to the sidewalks of a building will be visually compatible with the prevalent architectural styles of entrances and porch projections on historic sites, buildings and structures within a historic preservation review area.
7. *Relationship to materials and texture.* The relationship of materials and texture of the facade of a building will be visually compatible with the predominant materials used in the historic sites, buildings and structures within a historic preservation review area.
8. *Roof shapes.* The roof shape of a building or structure will be visually compatible with the roof shape(s) of a historic site, building or structure within a historic preservation review area.
9. *Walls of continuity.* Appearances of a building or structure such as walls, wrought-iron fences, evergreen landscape masses, or building facades, will form cohesive walls of enclosure along a street to insure visual compatibility of the building to historic buildings, structures or sites to which it is visually related.
10. *Scale of building.* The size of a building, the building mass in relation to open spaces, windows, door openings, balconies and porches will be visually compatible with the building size and building mass of historic sites, buildings and structures within a historic preservation review area.
11. *Directional expression of front elevation.* A building will be visually compatible with the buildings, structures and sites in its directional character: vertical, horizontal or non-directional.

Staff Analysis:

The proposed building features a rectangular shape; two stories; flat roof with raised parapet on

the front façade; cornices; brick and aluminum materials; decorative banding; and a front façade featuring large, storefront windows. All of these components are consistent with the commercial vernacular style which is present in the downtown. The proposed building features segmental brick arches, cornices, recessed entries, bulkhead, transom windows, and decorative brick banding.

New construction should not dramatically alter the historic setting of the neighborhood. The subject property is next to the Royellou Lane (west), Mount Dora History Museum (south), the Ingram Building (north) and a City parking lot (east). Royellou Lane is developed with commercial and office uses. The majority of buildings surrounding this building are all brick or masonry materials with flat roofs. This building will complement the surrounding buildings with materials and design while adding historic elements to contribute to the district.

LDC Section 3.4.7 (5)(a), states that buildings shall be set back from property lines consistent with existing adjacent or nearby buildings so as to provide a uniform frontage and spacing without blocking reasonable visibility of existing buildings. The structure to the north of the property abuts Royellou Lane and the structure to the south is setback approximately seven (7) feet from Royellou Lane. The proposed building is situated between one (1) and four (4) feet from Royellou Lane, making it consistent with the abutting buildings.

The Applicant has previously discussed providing access to the building via the eastern elevation abutting the public lot but this aspect is unclear and the submittal did not contain elevations of the rear of the building.

The building will emulate historic features while still having the appearance of being a new building. This meets the criteria for new construction for the Department of the Secretary of Interior, which does not want new buildings to be mistaken as historic. New buildings are to match the character of the area while creating their own new stamp on the district.

Staff Recommendation: Staff finds the application consistent with Section 3.6.4 of the City's Land Development Code and adopted Historic Design Guideline and recommends approval with the following conditions:

1. The rear of the building (eastern elevation) is developed with decorative, architecture features (elevation was not included with the submittal).
2. The top of the building should be enhanced. This may be accomplished by providing an enhanced cornice, a decorative frieze, a more defined and enriched entablature, or by other means.
3. Pursuant to LDC Section 6.13.3 (1) (k) (2) (b), first floor windows shall be recessed, a minimum of one-half inch, and shall include visually prominent sills, shutters, stucco reliefs, or other such forms of framing.
4. Pursuant to LDC Section 6.13.3 (1) (b) (2), facades facing a public street shall have either windows comprising a minimum of 25% of the affected façade or a projected covered public entry with a minimum of 20% of the wall space devoted to windows.

Approval subject to site plan review through the City's normal site plan review process with consideration by the Planning and Zoning Commission.

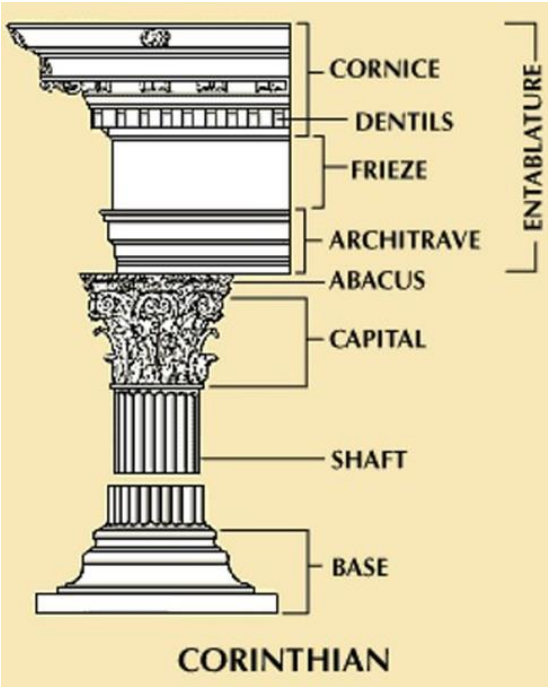

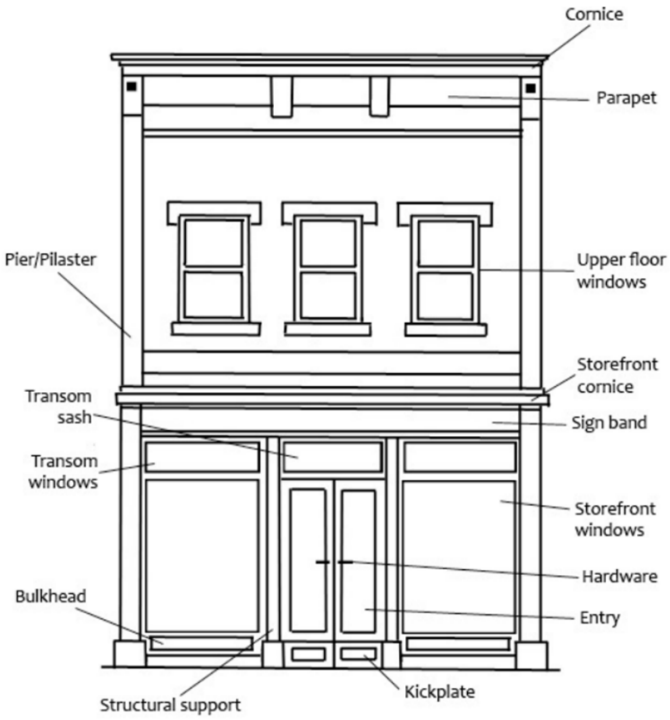

<u>Attachments</u>:
Photos
Application

CITY OF MOUNT DORA

138 E 5th Avenue
Photos of Site Area

CITY OF MOUNT DORA

Planning and Development
510 N. Baker St.
Mount Dora, FL 32757
352-735-7113
plandev@cityofmountdora.com

APPLICATION FOR CERTIFICATE OF APPROPRIATENESS
Renovations, Additions and New Construction

Property Address: 138 E Fifth Avenue, Mount Dora, FL 32757 Alternate Key No.: 1465273

Property Owner: G3 MD, LLC

Applicant: Austin Guenther

Applicant's Mailing Address: 310 N Baker Street, Mount Dora, FL 32757

Applicant's Phone Number: (352) 397-4869

Applicant's Email Address: Austin.Guenther@G3Development.com

Current Building Use (e.g. residential or commercial): Vacant Land/Rear Parking

Application Type:

- ☑ New Construction
- ☐ Addition
- ☐ Renovation

Check any structural systems or elements which will be affected by this project:

- ☐ Steps or Stairways
- ☐ Windows
- ☐ Doors
- ☐ Walls or Fences
- ☐ Foundation
- ☐ Porches or Porte Cochere
- ☐ Chimney
- ☐ Exterior Lighting
- ☐ Siding/Stucco/Façade Work
- ☐ Walls/Structural
- ☐ Roof
- ☐ Landscape Features

Existing Materials: N/A

Proposed Materials: Brick Veneer, Storefront Glass, Stucco

Is there a chimney on the building and will it be affected? No

Full Description of Proposed Alteration(s) or Construction including materials; please attach additional documentation if needed: Construction of a 4,000 square foot mixed-use building on Royellou Avenue. Facade will include brick veneer, storefront glass systems, and residential windows consistent with the architecture in downtown Mount Dora.

Reason for Addition / Modification:

Note: This application is for a Certificate of Appropriateness from the Historic Preservation Board only. The proposed work must also meet Zoning and Building Code Requirements; additional permits may be required.

Submission of the application implies permission is granted to the City of Mount Dora to inspect and document any necessary information needed to process this request.

PRELIMINARY ELEVATIONS

FRONT ELEVATION

MOUNT DORA 2 STORY BUILDING

www.ARCHENICS.com • Email: ROBBY@ARCHENICS.com • ARCHENICS

© COPYRIGHT 2019 – METRO GROUP © COPYRIGHT 2017 – ROBBY JOSHI ARCHITECT • AA#26001341

ALL PLAN & DESIGNS ARE ARCHITECTS SUGGESTIONS AND ARE SUBJECT TO REVISION AND/OR CHANGE WITHOUT NOTICE. ALL DRAWINGS, DESIGNS, IDEAS, AND CONCEPTS ARE INSTRUMENT OF SERVICE PREPARED BY THE ARCHITECT OF RECORD. THESE ITEMS REMAINS THE INTELLECTUAL PROPERTY OF THE ARCHITECT OF RECORD, WHO SHALL RETAIN ALL STATUTORY AND OTHER RESERVED RIGHTS, INCLUDING THE COPYRIGHT THERETO. ANY USE, DERIVATIVE REPRODUCTION OR CHANGES TO THESE DOCUMENTS WITHOUT WRITTEN CONSENT OF THE ARCHITECT IS A VIOLATION OF THE FEDERAL COPYRIGHT LAWS.

PROPOSED MATERIALS:

EL DORADO
TundraBrick Hartford

SW 7566
Westhighland White

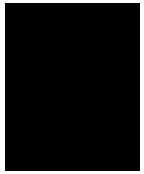

Matte Black
Aluminum Storefront

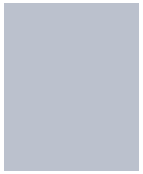

Granite Nameplate

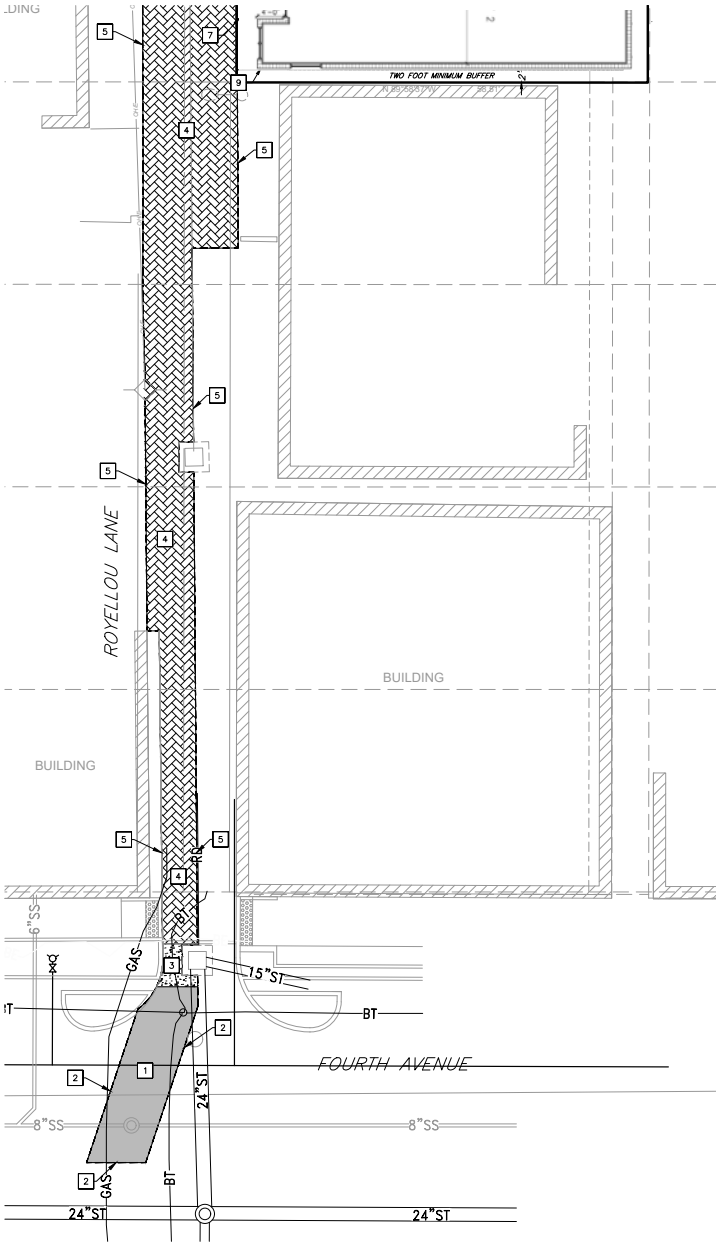

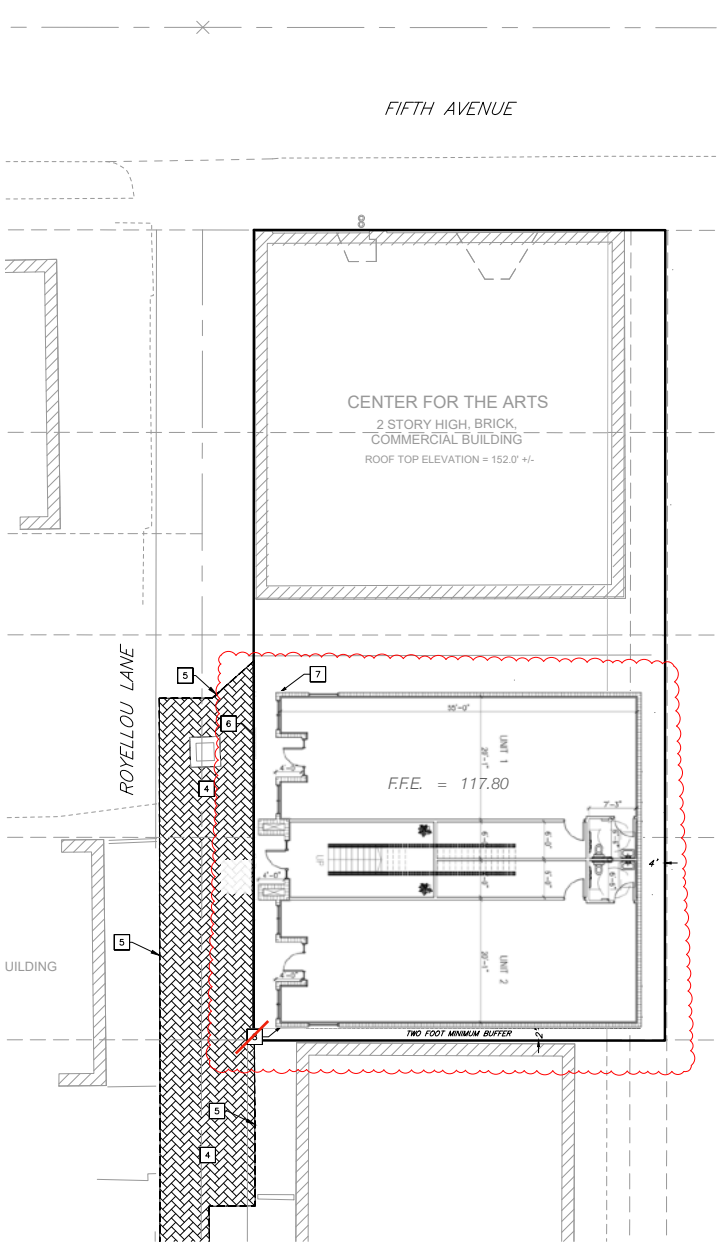

GRAPHIC SCALE

(IN FEET)
1 inch = 10 ft.

SITE PLAN KEYNOTES

1. FULL DEPTH ASPHALT PAVEMENT
2. OPENCUT AND REMOVE EXISTING ASPHALT PAVEMENT
3. ~~6" CONCRETE PAVEMENT~~
4. CONCRETE PAVERS
5. LIMITS OF CONCRETE PAVER REMOVAL
6. 2' DEDECTABLE WARNING STRIP
7. 24" HIGH RETAINING WALL (BY OTHERS)
8. ~~PEDESTRIAN RAILING (ALUMINUM) FDOT INDEX 515-062~~

SITE PLAN LEGEND

- 6" THICK CONCRETE PAVEMENT
- 6" THICK CONCRETE PAVEMENT
- CONCRETE PAVERS

REV.	DATE	DESCRIPTION	APP'D BY
2	05/03/23	REVISED BUILDING FOOTPRINT	JMB

MOUNT DORA CENTER FOR THE ARTS
MOUNT DORA, FLORIDA

SITE PLAN

HIGHLAND ENGINEERING, INC.
415 CITRUS TOWER BLVD.
Clermonte, Florida 34711
Office 407-275-7677
Fax. 407-275-7901
CA No. 27612

JOB No.:	G3D-001
DESIGNED BY:	J.B. & J.K.
DRAWN BY:	J.Q.,J.K.
APPROVED BY:	J.B.
DATE:	11-01-2021
SHEET:	C200

NOT FOR CONSTRUCTION
UNLESS SIGNED AND SEALED

DATE:_____

Plat of Boundary Survey for
Mt. Dora Center for the Arts
130 East Fifth Avenue, Mt. Dora

ORIGINAL DESCRIPTION

The West 1/2 of Lots 1, 2, 3 and 4 of Block 2 in Section 31, Township 19 South, Range 27 East, according to the Official Plat of Mount Dora, recorded in Plat Book 3, Pages 37 through 43, Public Records of Lake County, Florida.

NEW DESCRIPTION

Begin at the Northwest corner of Lot 1 in Block 2 in Section 31, Township 19 South, Range 27 East, according to the Official Plat of Mount Dora, recorded in Plat Book 3, Pages 37 through 43, Public Records of Lake County, Florida; thence run S 89°58'25" E along the North line of said Lot 1 a distance of 67.00 feet; thence run S 00°01'54" W, 132.00 feet to a point on the South line of Lot 4 of said Block 2, Official Map of Mount Dora; thence run N 89°58'25" W along the South line of said Lot 4 for a distance of 67.00 feet to the Southwest corner of said Lot 4, said point being on the Easterly line of a 16 foot alley; thence run N 00°01'54" E along the Easterly line of said alley for a distance of 132.00 feet to the Point of Beginning.

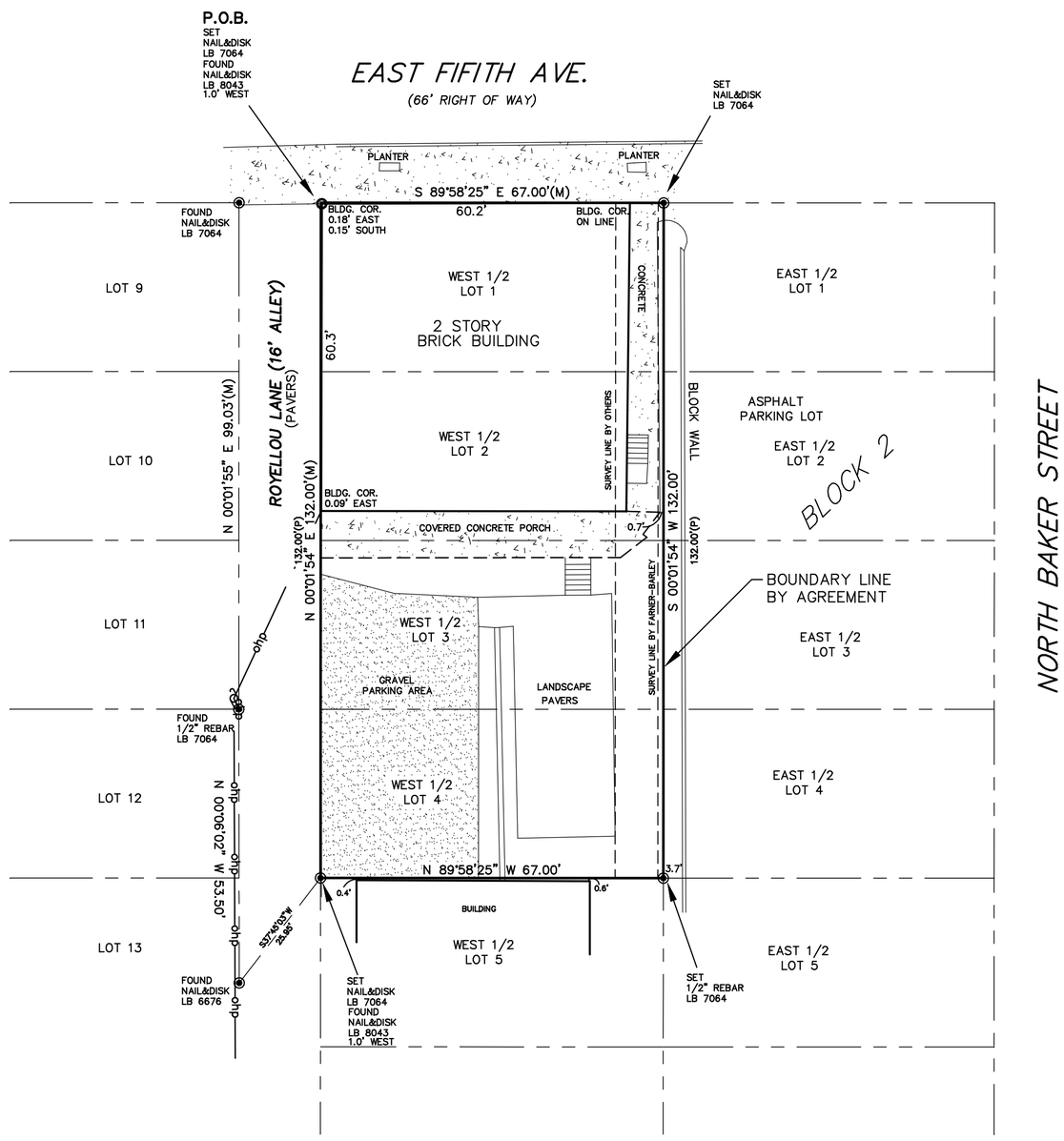

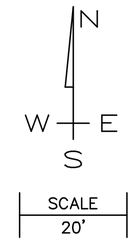

LEGEND:

	IPS	IRON PIN SET (1/2" REBAR W/ CAP)
	IPF	IRON PIN FOUND
	CP	CALCULATED POINT ONLY
	CM	CONCRETE MONUMENT
		POWER POLE
		LIGHT POLE
		WATER VALVE
		GAS VALVE
		WELL
		FIRE HYDRANT
		SANITARY SEWER MANHOLE
		STORM DRAIN MANHOLE
		CATCH BASIN
		CLEANOUT
		CURB INLET
		TRANSFORMER
ohp		OVERHEAD UTILITY
—X—X—X—		FENCE LINE
	(M)	FIELD MEASURED
	(R)	RECORD DESCRIPTION OR PLAT
	O.R.	OFFICIAL RECORD BOOK
	I.D.	IDENTIFICATION
	P.B.	PLAT BOOK
	Pg.	PAGE
	RB	REBAR
	IP	IRON PIPE
	SEC.	SECTION
	F.C.	FENCE CORNER
	R/W	RIGHT-OF-WAY
	EP	EDGE OF PAVEMENT

SURVEYOR'S NOTES

1) Bearings based on Florida grid East zone (Lengemann Network).

2) Subject to easements and restrictions of Record.

3) All of the above captioned property lies within F.I.R.M. Zone "X" according to F.I.R.M. panel No. 12069C 0367 E, dated December 18, 2012.

4) This Survey is based on the Description provided, Plat information, Found Monumentation and other data acquired by this firm.

5) Foundations, Underground Structures, and Underground Improvements, if any, not located by this firm.

6) Fences were located ONLY where dimensioned and may not run straight; ownership of fences, if any, unknown.

I hereby certify that this survey was made under my responsible charge and meets the minimum technical standards as set forth by the Board of Professional Land Surveyors in Chapter 61G17-6 Florida Administrative Code. Pursuant to Section 472.027 Florida Statutes.

Fulton V. Clinkscales, Jr., Surveyor #4986

FULTON V. CLINKSCALES, JR. CERTIFICATE No. 4986 STATE OF FLORIDA REGISTERED LAND SURVEYOR

Not valid without the signature and the original raised seal of a Florida licensed surveyor and mapper.

No.	REVISIONS	Date
1	xxxxx xxxx	xx/xx/xx

FREELAND - CLINKSCALES + ASSOCIATES, INC. of NC
Engineers * Land Surveyors
201 2nd AVE. EAST
HENDERSONVILLE, N.C. 28792
(828) 697-6539
fcaofnc@outlook.com
808 E. ALFRED ST., TAVARES, FL 32778
(352) 609-2830
(352) 589-8093 (Fax) LB 7064

REF. PLAT BOOK	3/37
REF. O.R. BOOK	1434/1598
ALT. KEY#	1465273
PARTY CHIEF	SCL
DRAWN	SCL
DATE	OCT. 25, 2021
DWG.NO.	F41197

Property Record Card

General Information

Name:	G3 MD LLC	**Alternate Key:**	1465273
Mailing Address:	PO BOX 1273 MOUNT DORA, FL 32756-1273 *Update Mailing Address*	**Parcel Number:**	29-19-27-0030-002-00100
		Millage Group and City:	0MD1 Mount Dora
		2022 Total Certified Millage Rate:	18.8051
		Trash/Recycling/Water/Info:	*My Public Services Map*
Property Location:	138 E FIFTH AVE MOUNT DORA FL, 32757	**Property Name:**	MT DORA CENTER FOR THE ARTS/ARTISANS *Submit Property Name*
		School Information:	*School Locator & Bus Stop Map* *School Boundary Maps*
Property Description:	MOUNT DORA, 31-19-27 W 1/2 OF LOTS 1, 2, 3, 4 BLK 2 PB 3 PG 37 PB 3 PGS 37-43 ORB 5911 PG 169		

NOTE: This property description is a condensed/abbreviated version of the original description as recorded on deeds or other legal instruments in the public records of the Lake County Clerk of Court. It may not include the Public Land Survey System's Section, Township, Range information or the county in which the property is located. It is intended to represent the land boundary only and does not include easements or other interests of record. This description should not be used for purposes of conveying property title. The Property Appraiser assumes no responsibility for the consequences of inappropriate uses or interpretations of the property description.

Land Data

Line	Land Use	Frontage	Depth	Notes	No. Units	Type	Class Value	Land Value
1	STORE - OTHER NON-PROFIT (1175)	0	0		8712.000	Square Feet	$0.00	$168,664.00

Click here for Zoning Info Map **FEMA Flood**

Commercial Building(s)

Building 1

Commercial	Building Value: $431,210.00 Building Use: 1 STORY STORE (11C) Structure Type:

Summary

Year Built:	1923
Total Effective Area:	7664
Full Bathrooms:	7
Half Bathrooms:	3
Elevators:	0
Elevator Landings:	0
Residential Units:	0
Kitchens:	7
Fireplaces:	0

Section(s)

Section Type	No. Stories	Ground Floor Area
COMMERCIAL CANOPY (COP)	2.00	464
FINISHED LIVING AREA (FLA)	2.00	7200

View Larger

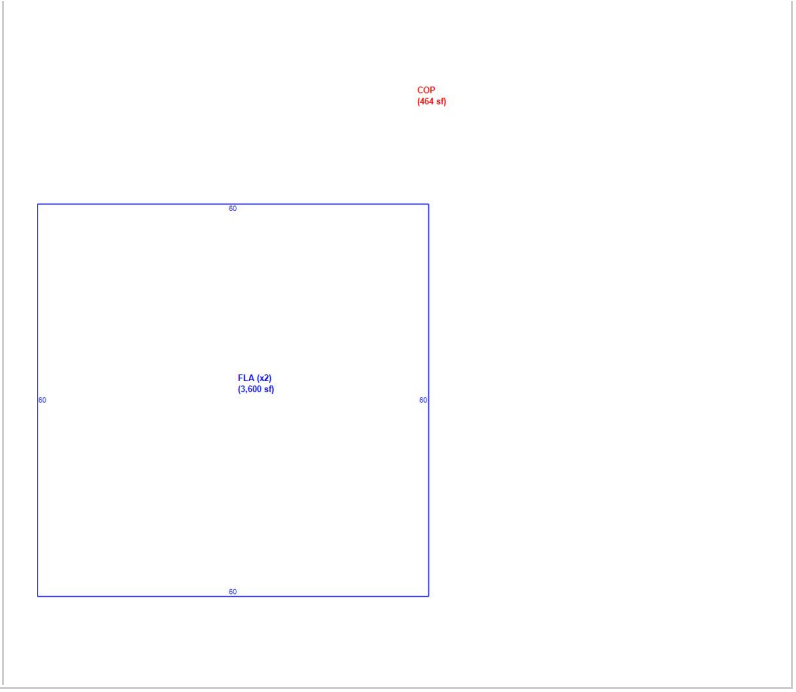

Miscellaneous Improvements

There is no improvement information to display.

Sales History

NOTE: This section is not intended to be a complete chain of title. Additional official book/page numbers may be listed in the property description above and/or recorded and indexed with the Clerk of Court. Follow this link to search all documents by owner's name..

Book/Page	Sale Date	Instrument	Qualified/Unqualified	Vacant/Improved	Sale Price
5911 / 169	03/2022	Warranty Deed	Unqualified	Improved	$1,310,000.00
1434 / 1598	05/1996	Warranty Deed	Qualified	Improved	$300,000.00

Click here to search for mortgages, liens, and other legal documents.

Values and Estimated Ad Valorem Taxes

Values shown below are 2023 CERTIFIED VALUES (July 1 Preliminary Tax Roll Certification)

Tax Authority	Market Value	Assessed Value	Taxable Value	Millage	Estimated Taxes
LAKE COUNTY BCC GENERAL FUND	$599,874	$599,874	$599,874	5.0364	$3,021.21
SCHOOL BOARD STATE	$599,874	$599,874	$599,874	3.2500	$1,949.59
SCHOOL BOARD LOCAL	$599,874	$599,874	$599,874	2.9980	$1,798.42
LAKE COUNTY WATER AUTHORITY	$599,874	$599,874	$599,874	0.3083	$184.94
NORTH LAKE HOSPITAL DIST	$599,874	$599,874	$599,874	0.5000	$299.94
ST JOHNS RIVER FL WATER MGMT DIST	$599,874	$599,874	$599,874	0.1974	$118.42
CITY OF MOUNT DORA	$599,874	$599,874	$599,874	5.9603	$3,575.43
LAKE COUNTY MSTU AMBULANCE	$599,874	$599,874	$599,874	0.4629	$277.68
LAKE COUNTY VOTED DEBT SERVICE	$599,874	$599,874	$599,874	0.0918	$55.07
				Total: 18.8051	**Total:** $11,280.70

Exemptions Information

This property is benefitting from the following exemptions with a checkmark ✓

Homestead Exemption (first exemption up to $25,000)	Learn More	View the Law
Additional Homestead Exemption (up to an additional $25,000)	Learn More	View the Law
Limited Income Senior Exemption (applied to county millage - up to $50,000)	Learn More	View the Law
Limited Income Senior Exemption (applied to city millage - up to $25,000)	Learn More	View the Law
Limited Income Senior 25 Year Residency (county millage only-exemption amount varies)	Learn More	View the Law
Widow / Widower Exemption (up to $5,000)	Learn More	View the Law
Blind Exemption (up to $500)	Learn More	View the Law
Disability Exemption (up to $5,000)	Learn More	View the Law
Total and Permanent Disability Exemption (amount varies)	Learn More	View the Law
Veteran's Disability Exemption ($5,000)	Learn More	View the Law
Veteran's Total and Permanent Disability Exemption (amount varies)	Learn More	View the Law
Veteran's Combat Related Disability Exemption (amount varies)	Learn More	View the Law
Deployed Servicemember Exemption (amount varies)	Learn More	View the Law
First Responder Total and Permanent Disability Exemption (amount varies)	Learn More	View the Law
Surviving Spouse of First Responder Exemption (amount varies)	Learn More	View the Law
Conservation Exemption (amount varies)	Learn More	View the Law
Tangible Personal Property Exemption (up to $25,000)	Learn More	View the Law
Religious, Charitable, Institutional, and Organizational Exemptions (amount varies)	Learn More	View the Law
Economic Development Exemption	Learn More	View the Law
Government Exemption (amount varies)	Learn More	View the Law

NOTE: Information on this Property Record Card is compiled and used by the Lake County Property Appraiser for the sole purpose of ad valorem property tax assessment administration in accordance with the Florida Constitution, Statutes, and Administrative Code. The Lake County Property Appraiser makes no representations or warranties regarding the completeness and accuracy of the data herein, its use or interpretation, the fee or beneficial/equitable title ownership or encumbrances of the property, and assumes no liability associated with its use or misuse. See the posted Site Notice.

Copyright © 2014 Lake County Property Appraiser. All rights reserved.
Property data updated nightly.
Site Notice