City of Mount Dora
510 North Baker Street
Mount Dora, Florida 32757
352-735-7126

Mount Dora City Council

Mount Dora City Hall Board Room
510 North Baker Street, Mount Dora, Florida 32757
July 5, 2022, 6:00 PM

AGENDA

CALL TO ORDER

MOMENT OF SILENCE & PLEDGE OF ALLEGIANCE

ROLL CALL

PRESENTATIONS

PUBLIC COMMENTS

- This is the time for the public to come forward with any comments on any subject related to City business that is not listed on the Agenda.
- Please complete a speaker card and provide it to the City Clerk prior to the meeting.
- Please clearly state your name and address for the record. If you are part of a group, try to designate a speaker.
- Please address all comments to the Mayor.
- We will try to answer your questions at the time asked; however, there may be times we will need to conduct research prior to providing an answer.

APPROVAL OF AGENDA

BOARD APPOINTMENTS

CONSENT AGENDA

1. Request Issuance of Certificate for Historic Marker at 844 N. Clayton Street - "*The Bouton Cottage*" 4

2. Request Approval of Amendment to the Interlocal Agreement between Lake County and the City of Mount Dora for Library Services 41

3. Request Approval of Resolution No. 2022-43, Duke Energy Foundation Economic Development Grant Application 72

4. Request Approval of Resolution No. 2022-44, Authorizing a Credit to the Accounts of Residential Reclaimed Water Customers for Certain Sewer Fees 78

5. Request Approval of Meeting Minutes 82

- June 7, 2022 City Council Regular Session Minutes
- June 7, 2022 CRA Governing Board Minutes
- June 7, 2022 Northeast CRA Governing Board Minutes
- June 21, 2022 City Council Regular Session Minutes
- June 21, 2022 CRA Governing Board Minutes

ACTION ITEMS

1. Request Approval to Waive Fees for Use of the Martin Luther King Center by ALCO 109

2. Request Approval of Agreement between the School Board of Lake County and the City of Mount Dora for School Resource Officer Program 2022-2023 111

3. Request Establishment of City Boards and Committees Membership Standards Based on Council Survey Results 123

PUBLIC HEARINGS - RESOLUTIONS/ORDINANCES

1. Request Adoption of Resolution No. 2022-22, Sandy Ridge Village Replat 125

2. Request Approval of First Reading of Ordinance No. 2022-09, Change in Zoning – Daniel C. and Judith Ann McWhorter 150

CITY MANAGER'S REPORT

1. City Manager's Update 185

CITY ATTORNEY'S REPORT

COMMUNICATIONS AND REPORTS

- Council Member Nate Walker
- Council Member Doug Bryant
- Council Member John Cataldo
- Council Member Austin Guenther
- Council Member Cal Rolfson
- Vice-Mayor Marc Crail
- Mayor Crissy Stile

FUTURE MEETING DATES

- July 11, 2022, 10:00 AM, Work Session
- July 19, 2022, 6:00 PM, Regular Session
- July 29, 2022, 10:00 AM, Work Session
- August 2, 2022, 6:00 PM, Regular Session

ADJOURNMENT

PURSUANT TO SECTION 286.0105, FLORIDA STATUTES, IF ANY PERSON DECIDES TO APPEAL ANY DECISION MADE AT THIS MEETING WITH RESPECT TO ANY MATTER CONSIDERED AT ANY MEETING OR HEARING, SUCH PERSON MAY NEED A RECORD OF THESE PROCEEDINGS FOR SUCH PURPOSE, A PERSON MAY NEED TO ENSURE THAT A VERBATIM RECORD OF THE PROCEEDINGS IS MADE WHICH RECORD INCLUDES THE TESTIMONY AND EVIDENCE UPON WHICH THE APPEAL IS TO BE BASED. VERBATIM RECORD WILL NOT BE PROVIDED BY THE CITY OF MOUNT DORA.

NOTICE: IN ACCORDANCE WITH THE AMERICANS WITH DISABILITIES ACT OF 1990, PERSONS NEEDING A SPECIAL ACCOMMODATION TO PARTICIPATE IN THIS PROCEEDING SHOULD CONTACT JESSICA BURNHAM, CITY CLERK, AT LEAST 48 HOURS PRIOR TO THE PROCEEDINGS. TELEPHONE (352) 735-7126 FOR ASSISTANCE. IF HEARING IMPAIRED, TELEPHONE THE FLORIDA RELAY SERVICE NUMBERS, (800) 955-8771 (TDD) OR (800) 955-8770 (VOICE) FOR ASSISTANCE.

510 N. Baker St.
Mount Dora, FL 32757
352-735-7126

DATE: **July 5, 2022**

TO: **Honorable Mayor and City Council Members**

FROM: **Patrick C. Comiskey, City Manager** Patrick C. Comiskey

SUBJECT: Request Issuance of Certificate for Historic Marker at 844 N. Clayton Street - "*The Bouton Cottage"*

Introduction:
This is a request for City Council to approve Historic Marker located at 844 N. Clayton Street for "*The Bouton Cottage*".

Discussion:
The request is for a Historic Marker pursuant to the provisions of Section 3.6 of the City's Land Development Code for inclusion in the City's Historic Marker Program. The Historic Preservation Board, at their regularly scheduled meeting held on May 25, 2022, approved the Historic Marker for *"The Bouton Cottage"* based on Historical and Cultural Significance.

Attachment "1" is a copy of the Historic Preservation Board of the May 25, 2022, meeting with staff memo with a summary. This memo includes application details and description, vicinity map, photographs, and site inventory forms. The HPB recommended approval of the Historic Marker (vote 7-0).

Budget Impact:
There is no budget impact. The production cost of the marker is the responsibility of the applicant.

Strategic Impact:
Maintain and highlight historic properties within the City, supporting Economic Development.

Recommendation:
City Council approve the Historic Marker for 844 N. Clayton Street (The Bouton Cottage) and authorized the Mayor's signature and award the Certificate of Historic Significance.

Attachment(s):

1. Attachment 1 - 844 N Clayton HPB Full Packet Meeting May 25, 2022 (ADA)
2. Attachment 2 - Certificate

Prepared by:	Jeanann Hand, Deputy City Clerk	
Reviewed by:	Vince Sandersfeld, Planning and Development Director	Approved - 6/14/2022
	Jessica Burnham, City Clerk	Approved - 6/27/2022
	Jeanann Hand, Deputy City Clerk	Approved - 6/27/2022
	Patrick Comiskey, City Manager	Final Approval - 6/27/2022

CITY OF MOUNT DORA

Planning and Development
510 N. Baker St.
Mount Dora, FL 32757
352-735-7113
Fax: 352-735-7191
E-mail: plandev@cityofmountdora.com

DATE: May 25, 2022

TO: Historic Preservation Board

FROM: Michele Janiszewski, AICP, Senior Planner

RE: **Historic Site & Marker Request (HS-22-01); "The Bouton Cottage" (Marker Name Proposal); 844 N. Clayton St., Mount Dora; Lawrence G. & Mark A. Miceli (Owners and Applicants).**

Property Information

Site Address:	844 N. Clayton Street	**Site Name:**	The Bouton Cottage (Proposed)
Zoning District:	Single-Family Residential (R-1)	**Land Use:**	Medium Density Residential (MD)
Current Use:	Single-Family Residence	**Alternate Key No.:**	1476437

Structure Information

Date of Construction:	1925	**Style:**	Frame Vernacular
Structural System:	Wood Frame	**Foundation:**	Poured Concrete Footing
Siding:	Wood / Plywood	**Porch:**	One Closed
Roof:	Asphalt Shingles	**Windows:**	1/1 with metal side awnings
Roof Type:	Gable	**Chimneys:**	One Brick with metal cap
Distinguishing Architectural Features: Rafter tails; gable vents; wood lattice skirt			

Staff Analysis: The application is for a structure to be designated as a Historic Site pursuant to the provisions of Section 3.6 of the City's *Land Development Code* for inclusion in the City's Historic Site and Marker Program. The subject property is located on the east side of Clayton Street between 8th Avenue and 9th Avenue (see Vicinity Map).

Pursuant to Land Development Code Section 3.6.3.c, to qualify as a historic site, said property must fulfill one or more of the criteria set forth in the paragraphs below:

1. A building, structure, site or preservation review area will be deemed to have **historical or cultural significance** if it meets the following criteria:
   a. Is associated in a significant way with the life or activities of a major person important in city, state or national history (i.e., the homestead of a local founding family), or
   b. Is the site of a historic event with significant effect upon the city, state or nation, or
   c. Is associated in a significant way with a major historic event whether cultural, economic,

social, military, or political, or
   d. Exemplifies the historical, political, cultural, economic or social trends of the community in history, or
   e. Is associated in a significant way with a past or continuing institution which has contributed substantially to the life of the city.
2. A building, structure, site or preservation review area is deemed to **have architectural or aesthetic significance** if it fulfills one or more of the following criteria:
   a. Portrays the environment in an era of history characterized by one or more distinctive architectural styles, or
   b. Embodies those distinguishing characteristics of an architectural style, period or method of construction, or
   c. Is a historic or outstanding work of a prominent architect, designer, landscape architect, or builder, or
   d. Contains elements of design, detail, material, or craftsmanship of outstanding quality or which represented, in its time, a significant innovation or adaptation to the Central Florida environment.

The subject property is Lot 2 within the Wildwood subdivision which was platted in 1924. Records indicate that the existing, frame vernacular dwelling unit was constructed in 1925. Frame vernacular buildings were widely constructed in Mount Dora from the 1800s to the 1930s and gave the City its distinctive residential character. The development pattern for residential structures showed modest wood frame structures that were primarily used as winter residences. This was likely the case for the original owners, Jerome H. and Frances Bouton, who listed Albany, New York as their address on the deed purchasing the property in 1925. Jerome H. and Cora Bouton listed Albany, New York as their address on the deed selling the property in 1941 as well. The proposed name for the site is the 'Bouton Cottage;' a dedication to the original owners.

The structure is a one-story, frame vernacular residence with a gable roof, wood siding, and asphalt shingles The dwelling featured distinguishing architectural features such as rafter tails; gable vents; and a wood lattice skirt on the 2019 historical structure form (enclosed). Both the 2008 and 2019 historical structure surveys noted that the building is a contributing structure within the Historic Preservation Review Boundary area due to its historic integrity exhibiting its original construction and location within a collection of well-preserved historic buildings.

Based on this information, staff found that the structure is architectural and aesthetically significant because it embodies the distinguishing characteristics of the frame vernacular which were widely constructed in Mount Dora at the time of construction. The gable vent and rafter tails are still observable on the dwelling unit and contribute to the structure's architectural and aesthetic significance. The structure has cultural significance because it exemplifies the development trends of the time period and its intended end user.

Staff Recommendation: Staff finds the application consistent with LDC Section 3.6.3.c, and recommends that the site be designated as a Historic Site and receive a Historic Marker.

Attachments:
Vicinity Map
Photographs
Site Inventory Form (2008)
Site Inventory Form (2019)
Application

ATTACHMENT #1

844 N Clayton Street

CITY OF MOUNT DORA

PHOTOS
April 27, 2022
844 N. Clayton

Location

CITY OF MOUNT DORA

PHOTOS
April 27, 2022
844 N. Clayton

Location

ATTACHMENT #1

Florida Master Site File

HISTORICAL STRUCTURE FORM

Electronic Version 1.1.0

Site #8 LA03774
Recorder # 261
Field Date 3/15/2008
Form Date 3/15/2008
FormNo 200803
FormNo = Field Date (YYYYMM)

First Site Form Recorded for this Site? YES

GENERAL INFORMATION

Site Name (address if none) 844 N Clayton St
Multiple Listing (DHR only)
Other Names >>
Survey or Project Name
Survey#
National Register Category Building(s)

LOCATION & IDENTIFICATION

Address

Street No.	Direction	Street Name	Street Type	Direction Suffix
844	North	Clayton	Street	

Cross Streets (nearest/ between)
City / Town (within 3 miles) Mount Dora
In Current City Limits? YES
County Lake
Tax Parcel #(s)
Subdivision Name
Block
Lot
Ownership
Name of Public Tract (e.g., park)
Route to (especially if no street address)

MAPPING

USGS 7.5' Map Name
Publication Date >> EUSTIS;1980
Township:
Range:
Section:
1/4 section:
>> 19S ;27E ;29;UNSP
Irregular Section Name:
Landgrant
UTM: Zone
Easting
Northing
Plat or Other Map (map's name, location)

DESCRIPTION

Style Frame Vernacular
Other Style
Exterior Plan Rectangular
Other Exterior Plan
Number of Stories 1
Structural System(s) >> Wood frame
Other Structural System(s)
Foundation Type(s) >> Continuous
Other Foundation Types
Foundation Material(s) >> Poured Concrete Footing
Other Foundation Material(s)
Exterior Fabric(s) >> Wood/Plywood
Other Exterior Fabric(s)
Roof Type(s) >> Gable
Other Roof Type(s)
Roof Material(s) >>
Other Roof Material(s)
Roof Secondary Structure(s) (dormers etc) >>
Other Roof Secondary Structure(s)
Number of Chimneys 1
Chimney Material
Other Chimney Material(s)
Chimney Location(s)

HISTORICAL STRUCTURE FORM

8LA03774

DESCRIPTION (continued)

Window Descriptions 1/1

Main Entrance Description (stylistic details)

Porches: #open ____ #closed ____ #incised ____ Location(s)

Porch Roof Types(s)

Exterior Ornament

Interior Plan Other Interior Plan

Condition Fair

Structure Surroundings

Commercial: Residential: MOSTly this category

Institutional: Undeveloped:

Ancillary Features (Number / type of outbuildings, major landscape features)

Archaeological Remains (describe):

If archaeological remains are present, was an Archaeological Site Form completed? ____

Narrative Description (optional)

HISTORY

Construction year 1925

Architect (last name first): Builder (last name first):

Changes in Locations or Conditions

Type of Change	Year of Change	Date Change Noted	Description of Changes
>>			

Structure Use History

Use Year Use Started Year Use Ended >> Private residence;1925;

Other Structure Uses

Ownership History (especially original owner, dates, profession, etc.)

RESEARCH METHODS

Research Methods >> Examine local tax records

Other research methods

SURVEYOR'S EVALUATION OF SITE

Potentially Eligible for a Local Register? YES Name of Local Register if Eligible

Idividually Eligible for National Register? NO

Potential Contributor to NR District? YES

Area(s) of historical significance >>

Other Historical Associations

Explanation of Evaluation (required) Because the resource retains much of its historic integrity and is located in a well-preserved collection of historic buildings, it appears to contribute to a historic district.

ATTACHMENT #1

HISTORICAL STRUCTURE FORM

8LA03774

DOCUMENTATION (Photos, Plans, etc.)

Photographic Negatives or Other Collections Not Filed with FMSF, Including Field Notes, Plans, other Important Documents.

Document type: _____ Maintaining Organization: _____

File or Accession #: _____ Descriptive Information: _____

>>

RECORDER INFORMATION

Recorder Name (Last, First) Bland, Myles

Recorder Address / Phone 4104 St. Augustine Road Jacksonville, FL

Recorder Affiliation Bland & Associates, Inc Other Affiliation _____

Is a Text-Only Supplement File Attached (Surveyor Only)? NO

****** MASTER SITE FILE USE ONLY ******

SHPO's Evaluation of Resource

_____ Date _____

Cultural Resource Type: SS

Electronic Form Used: S110

Form Type Code: NORM

Form Quality Ranking: NEW

Form Status Code: SCAT

Supplement Information Status: NO SUPPLEMENT

Supplement File Status: NO SUPPLEMENT FILE

FMSF Staffer: _____

Computer Entry Date: 5/26/2008

Form Comments: _____

REQUIRED PAPER ATTACHMENTS	(1) USGS 7.5" MAP WITH STRUCTURE PINPOINTED IN RED (2) LARGE SCALE STREET OR PLAT MAP (3) PHOTO OF MAIN FACADE, B&W, AT LEAST 3"X5"

LA03774-200803

Supplementary Printout

> **USGS map name/year of publication or revision:**
EUSTIS;1980

> **Township/Range/Section/Qtr:**
19S ;27E ;29;UNSP

> **Structural system(s):**
Wood frame

> **Foundation types:**
Continuous

> **Foundation materials:**
Poured Concrete Footing

> **Exterior fabrics:**
Wood/Plywood
Drop siding

> **Roof types:**
Gable

> **Roof materials:**

> **Roof secondary structures (dormers etc):**

> **Change status/year changed/date noted/nature:**

> **Original, intermediate, present uses/year started/year ended:**
Private residence;1925;

> **Research methods:**
Examine local tax records
FL Master Site File-Cultural Resources
Pedestrian

> **Area(s) of historical significance:**

> **Repositories: Collection/Housed/Accession#/Describe**

> **[Other name(s)]:**

261

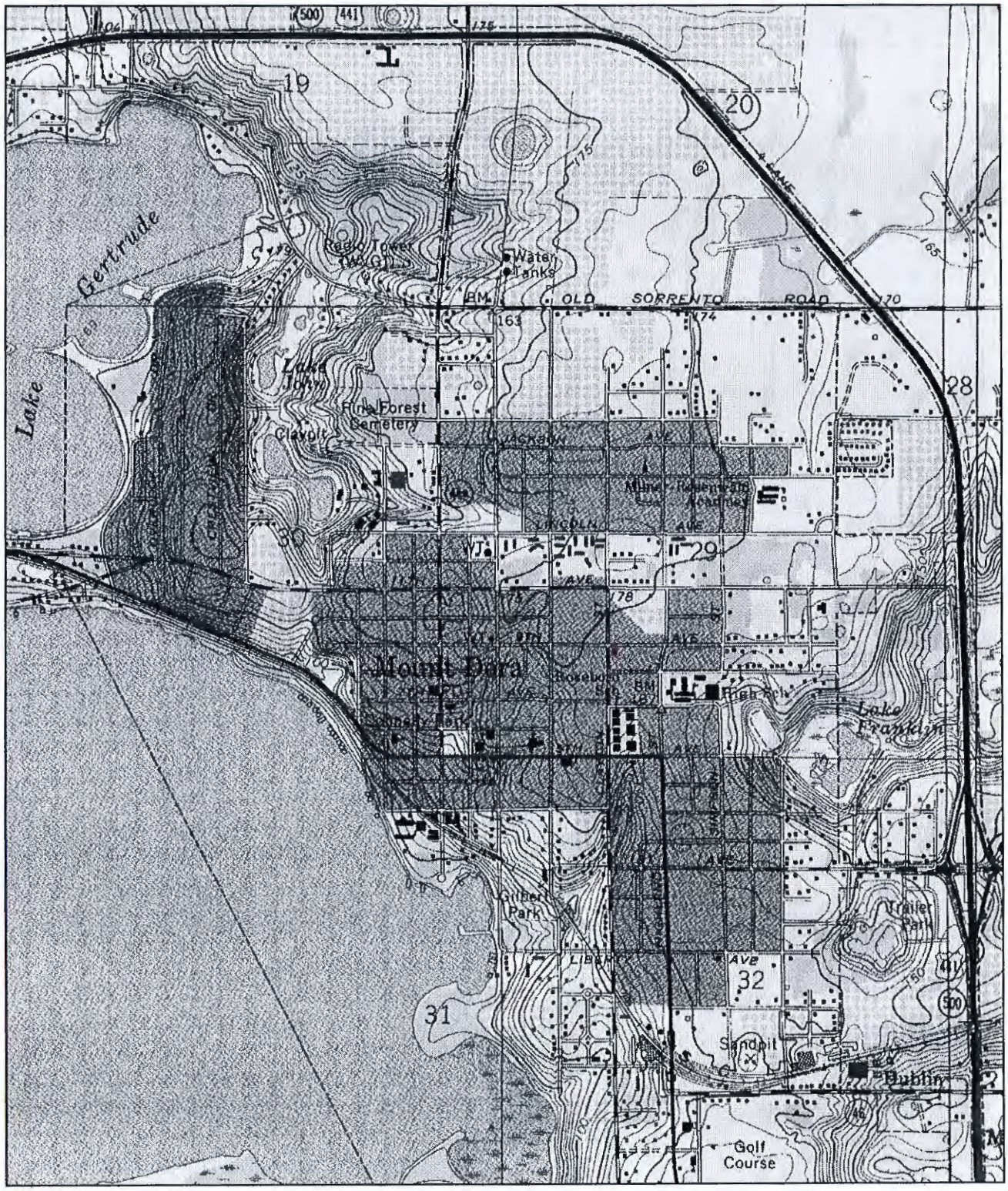

N

0 0.5 Mi

0 2000 Ft

Map provided by MyTopo.com

LA 3774

ATTACHMENT #1

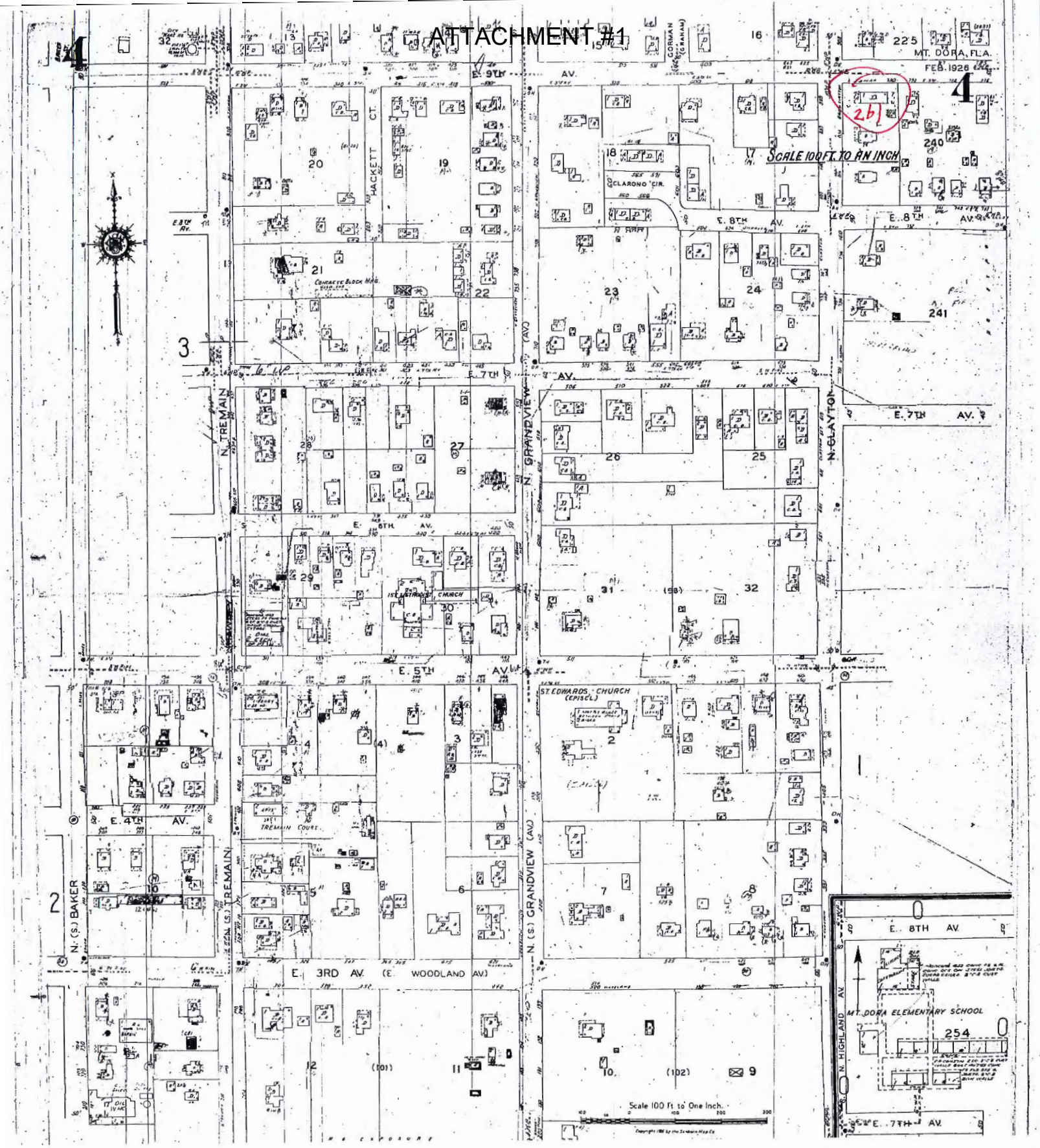

LA3774

LA3774

261

ATTACHMENT #1

Clear Form Values

Page 1

☐ Original
☒ Update

HISTORICAL STRUCTURE FORM
FLORIDA MASTER SITE FILE
Version 5.0 3/19

Site#8 LA03774
Field Date 11-16-2019
Form Date 11-16-2019
Recorder # 29

Shaded Fields represent the minimum acceptable level of documentation.
Consult the *Guide to Historical Structure Forms* for detailed instructions.

Site Name(s) (address if none) 844 North Clayton Street — Multiple Listing (DHR only) _____
Survey Project Name Mount Dora Historic Site Survey — Survey # (DHR only) _____
National Register Category (please check one) ☒building ☐structure ☐district ☐site ☐object
Ownership: ☐private-profit ☐private-nonprofit ☐private-individual ☐private-nonspecific ☐city ☐county ☐state ☐federal ☐Native American ☐foreign ☐unknown

LOCATION & MAPPING

Clear Location Values

	Street Number	Direction	Street Name	Street Type	Suffix Direction
Address:	844	N	Clayton	Street	

Cross Streets (nearest / between) Between E 8th Ave & E 9th Ave
USGS 7.5 Map Name EUSTIS — USGS Date 2018 — Plat or Other Map _____
City / Town (within 3 miles) Mount Dora — In City Limits? ☒yes ☐no ☐unknown — County Lake
Township 19S — Range 27E — Section 29 — ¼ section: ☐NW ☐SW ☐SE ☐NE — Irregular-name: _____
Tax Parcel # 29-19-27-2300-000-00200 — Landgrant _____
Subdivision Name Wildwood — Block _____ — Lot 2
UTM Coordinates: Zone ☐16 ☒17 — Easting 437732 — Northing 3186433
Other Coordinates: X: -81.63810 E — Y: 28.80396 N — Coordinate System & Datum WGS84
Name of Public Tract (e.g., park) _____

HISTORY

Clear History Values

Construction Year: 1925 ☒approximately ☐year listed or earlier ☐year listed or later
Original Use House — From (year): 1925 — To (year): 2019
Current Use House — From (year): 1925 — To (year): 2019
Other Use _____ — From (year): _____ — To (year): _____
Moves: ☐yes ☒no ☐unknown — Date: _____ — Original address N/A
Alterations: ☒yes ☐no ☐unknown — Date: _____ — Nature Metal cap on chimney
Additions: ☒yes ☐no ☐unknown — Date: 1-1-1970 — Nature Utility Building
Architect (last name first): _____ — Builder (last name first): _____
Ownership History (especially original owner, dates, profession, etc.)

Is the Resource Affected by a Local Preservation Ordinance? ☒yes ☐no ☐unknown — Describe Historic District Boundary

DESCRIPTION

Clear Description Values

Style Frame Vernacular — Exterior Plan Rectangular — Number of Stories 1
Exterior Fabric(s) 1. Wood siding — 2. _____ — 3. _____
Roof Type(s) 1. Gable — 2. _____ — 3. _____
Roof Material(s) 1. Asphalt shingles — 2. _____ — 3. _____
Roof secondary strucs. (dormers etc.) 1. _____ — 2. _____
Windows (types, materials, etc.)

metal side window awnings

Distinguishing Architectural Features (exterior or interior ornaments)

Rafter tails; gable vents; wood lattice skirt

Ancillary Features / Outbuildings (record outbuildings, major landscape features; use continuation sheet if needed.)

Utility Building

DHR USE ONLY	OFFICIAL EVALUATION	DHR USE ONLY
NR List Date _____	SHPO – Appears to meet criteria for NR listing: ☐yes ☐no ☐insufficient info — Date _____ — Init. _____	
☐Owner Objection	KEEPER – Determined eligible: ☐yes ☐no — Clear Check Boxes — Date _____	
	NR Criteria for Evaluation: ☐a ☐b ☐c ☐d (see *National Register Bulletin 15*, p. 2)	

HISTORICAL STRUCTURE FORM

Site #8 LA03774

DESCRIPTION (continued)

Clear Description Values

Chimney: No. 1 Chimney Material(s): 1. Brick 2. Metal

Structural System(s): 1. Wood frame 2. 3.

Foundation Type(s): 1. Piers 2.

Foundation Material(s): 1. 2.

Note: you may use the last box in each field to type in an answer that does not appear in the list provided

Main Entrance (stylistic details)

3 wood steps up

Porch Descriptions (types, locations, roof types, etc.)

Enclosed plywood, with two windows

Condition (overall resource condition): ☐excellent ☐good ☐fair ☒deteriorated ☐ruinous

Narrative Description of Resource

Rafter tail, set back very far. Metal side window awnings.

Archaeological Remains ☐Check if Archaeological Form Completed

RESEARCH METHODS (select all that apply)

☐FMSF record search (sites/surveys)	☐library research	☒building permits	☒Sanborn maps
☐FL State Archives/photo collection	☐city directory	☐occupant/owner interview	☒plat maps
☒property appraiser / tax records	☐newspaper files	☐neighbor interview	☐Public Lands Survey (DEP)
☐cultural resource survey (CRAS)	☒historic photos	☐interior inspection	☐HABS/HAER record search

☒other methods (describe) Field visit and documentation

Bibliographic References (give FMSF manuscript # if relevant, use continuation sheet if needed)

OPINION OF RESOURCE SIGNIFICANCE

Clear Significance Values

Appears to meet the criteria for National Register listing individually? ☐yes ☒no ☐insufficient information

Appears to meet the criteria for National Register listing as part of a district? ☒yes ☐no ☐insufficient information

Explanation of Evaluation (**required**, whether significant or not; use separate sheet if needed)

The structure appears to contribute to the Historic District, the architectural styling that has remained from its original construction is consistent with other structures from its time in Mount Dora.

Area(s) of Historical Significance (see *National Register Bulletin 15*, p. 8 for categories: e.g. "architecture", "ethnic heritage", "community planning & development", etc.)

1. Architecture 3. 5.

2. Community planning & developm 4. 6.

DOCUMENTATION

Clear Documentation Values

Accessible Documentation Not Filed with the Site File - including field notes, analysis notes, photos, plans and other important documents

1) Document type Maintaining organization

Document description File or accession #'s

2) Document type Maintaining organization

Document description File or accession #'s

RECORDER INFORMATION

Recorder Name Bradley Benmoshé, CNU-A Affiliation Other

Recorder Contact Information 6500 North Andrews Avenue, Fort Lauderdale, Florida 33309 / 954-776-1616

(address / phone / fax / e-mail)

Required Attachments

❶ **USGS 7.5' MAP WITH STRUCTURE LOCATION CLEARLY INDICATED**

❷ **LARGE SCALE STREET, PLAT OR PARCEL MAP** (available from most property appraiser web sites)

❸ **PHOTO OF MAIN FACADE, DIGITAL IMAGE FILE**

When submitting an image, it must be included in digital AND hard copy format (plain paper grayscale acceptable). Digital image must be at least 1600 x 1200 pixels, 24-bit color, jpeg or tiff.

ATTACHMENT #1

Street Map

N

844 NORTH CLAYTON ST MOUNT DORA FL 32757

0 37.5 75 150 Feet

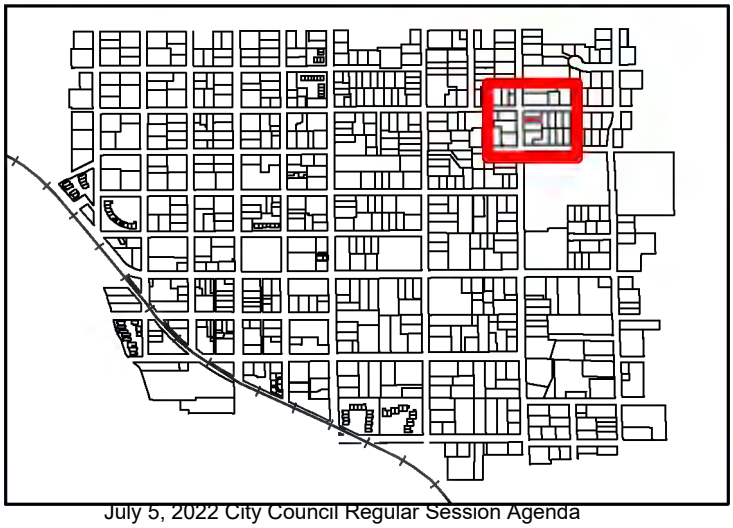

LA03774

KCI TECHNOLOGIES

Data Sources: Lake County, City of Mount Dora

ATTACHMENT #1

USGS Map

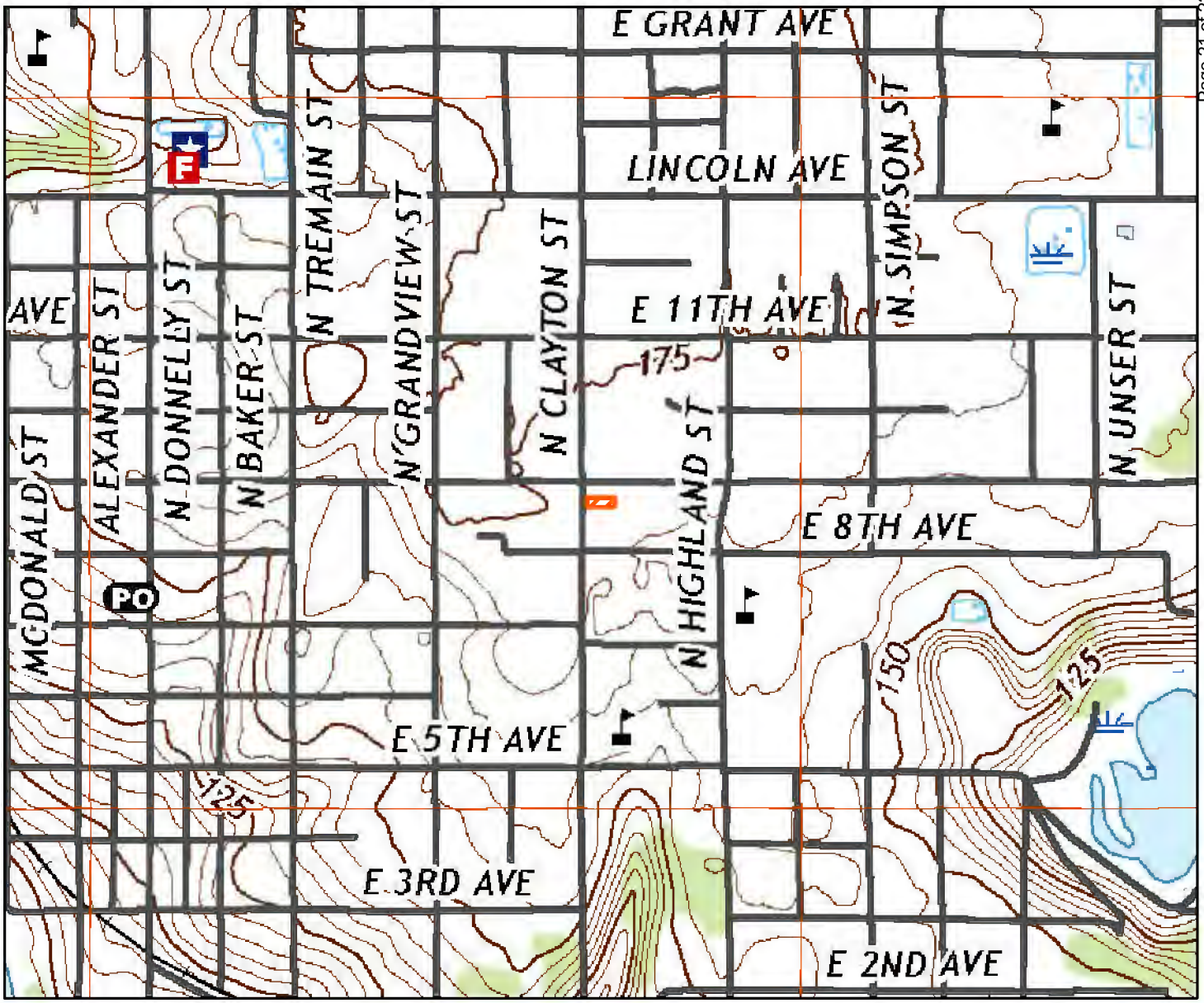

LA03774

844 NORTH CLAYTON ST MOUNT DORA FL 32757

Source: United States Geological Survey Eustis, FL 2018

N

KCI TECHNOLOGIES

CITY OF MOUNT DORA

Planning and Development
510 N. Baker St.
Mount Dora, FL 32757
352-735-7113
Fax: 352-735-7191
E-mail: plandev@cityofmountdora.com

HISTORIC MARKER PROGRAM APPLICATION FORM

1. Lawrence G. Miceli & Mark A. Miceli
NAME OF APPLICANT

834 N. Clayton St | Mount Dora | FL | 32757
MAILING ADDRESS | **CITY** | **STATE** | **ZIP CODE**

	754-367-2495	lgmiceli@comcast.net
BUSINESS PHONE	**HOME PHONE**	**EMAIL**

2. 844 N. Clayton St., Mount Dora, FL 32757
ADDRESS OF HISTORICAL PROPERTY

3. **HISTORICALLY RELEVANT INFORMATION PERTAINING TO THE PROPERTY:**
The property consists of an original "Worker's Cottage" that was significant to the working class Mount Dora citizen of the early 1900's. With increased development of Mount Dora, it remains one of the only "Worker's Cottages" remaining in the City.

4. **BUILDING INFORMATION:**

Year Built: 1925

Architectural Style: Cottage

Building Materials/Siding/Windows: Clapboard siding / Single Hung 1 over 1 windows

Current Use of the Building Residential

5. **NAME REQUEST FOR MARKER:** The Bouton Cottage

LAWRENCE G. MICELI, Esq.

Attorney at Law
834 N. Clayton St.
Mount Dora, Florida 32757
(754) 367-2495

April 7, 2022

City of Mount Dora
Planning and Zoning Department
Historic Preservation
510 Baker Street
Mount Dora, Florida 32757

Re: Application for Historic Marker
Street Address: 844 North Clayton Street, Mount Dora, Florida
Legal: Lot 2, Wildwood Subdivision, Plat Book 4, Page 57
Official Records of Lake County, Florida.
Proposed Name of Cottage: The Bouton Cottage.

Dear Sir or Madam:

Enclosed please find our Application for Historic Marker for the property located at 844 N. Clayton Street, Mount Dora, Florida 32757. The cottage is located in the Wildwood Subdivision contiguous to my own residence located at 834 N. Clayton St. I enclose herewith the Application as well as various photos documenting the restoration of the property as well as additional documents in support of this request.

History of the Property

To provide some history of the property, the Wildwood Subdivision was originally platted by Mr. George Bidwell on December 17, 1923. Mr. Bidwell received the tract of land from various transactions dating back to the United States Land Grant of 1882.

The Wildwood Subdivision was one of the early subdivisions in the City of Mount Dora. This property is platted as Lot 2, Wildwood Subdivision, and was originally sold from the developer, Mr. Bidwell, to Mr. and Mrs. Bouton, hence the requested name for the cottage, *"The Bouton Cottage."*

Thereafter the property was sold to Mr. Albert Whitman, who bequeathed the property to Susan May Fagen on his death. Ms. Fagen sold the cottage to Fred & Lillian Parclany in the mid 1940's who later sold the property to Mr. & Mrs. Sweenburg.

The property continued to pass between subsequent buyers and sellers including Daniel & Albert North who sold to George & Juliana Weed who then sold to Cora Byers. The Byers family also owned my homestead property located next door at 834 N. Clayton St, Mount Dora, Florida.

Several additional names appear in the record including George & Drucilla Kress, Stanley & Ruth Arthurs, Lawrence & Mable Wages, Jerry Rich, Vula Havens and Greg & Christine Hernandez. We acquired the property from Greg & Christine Hernandez.

We purchased the property from Greg & Christine Hernandez in September of 2021. Greg Hernandez was a long-term Mount Dora city employee who retired in 2020 due to health reasons. These same health issues caused the cottage to fall into significant disrepair and it had become in such disrepair that after residing there for 27 years, Greg and Christine could no longer live in the house.

History of the Wildwood Subdivision

The Wildwood Subdivision consists of 26 separate lots of land, with all but three homes being historic homes (i.e., over 50 years old), having been built between 1920 and 1938. All the historic homes would qualify as "Southern Bungalows" and/or "Cottages."

While most of the historic homes in the Wildwood Subdivision are significant to the Mount Dora historic district, I believe that our cottage at 844 N. Clayton St. has the significant architectural characteristics, and historic significance to the City of Mount Dora which would enable it to qualify for the Historic Marker Program under the guidelines set forth in the Mount Dora Historic Preservation Guidelines.

Specifically, the 844 N. Clayton cottage is one of the only remaining "worker's cottages" in the historic district that has not been significantly modified, added onto, or demolished to make way for larger homes.

Unfortunately, a similar "worker's cottage" on McDonald Street is currently being considered for demolition because the cost of repairing it is claimed to be beyond the capital return of the cottage when completed.

Prior Determinations of Historical Significance

The Historic Structure Survey conducted in both 2008 and 2019 indicated that the cottage was built in 1925. Further, the 2019 survey indicates that the structure appears to meet the criteria for National Register Listing as part of a district, with the specific explanation of, "The structure appears to contribute to the Historic District, the architectural styling that has remained from its original construction is consistent with other structures from its time in Mount Dora." Copies of the 2008 and 2019 Historic Structure Surveys are attached hereto.

The Worker's Cottage:

The "Worker's Cottage" is well documented as an architectural vernacular housing style built from the 1870s to the early 1920's and was used as affordable housing for working class homeowners. These small homes usually feature a narrow rectangular footprint to fit on a city lot and a simple gable roof. Most are one story buildings, with limited interior space. (See, Chicago Workers Cottage Initiative web page https://workerscottage.org/) The Worker's Cottage typifies the style of residence that was built for the working-class families that populated the area and supported the many local businesses, groves, or were employed as domestic help for a larger home. (See, section 4.2 of the Broadway-Fillmore, Buffalo, NY Intensive Level Historic Resources Survey https://buffaloah.com/surveys/bf/ReportSects.1,2,3,4,&6.pdf) which provides in part,

> *" The post-Civil War workers' cottage is a significant house type because of its wide popularity in American urban and semi-urban areas during the second half of the nineteenth century and early twentieth century. Additionally, it is important because it should be considered one of the first forms of fully industrialized housing for working-class Americans."*

These small homes were often built by the business owner or family that employed the resident and could be offered for sale to them as part of their compensation or offered on long term financing via an agreement for deed. However, no evidence of an agreement for deed exists in the public record for 844 N. Clayton St.

The Worker's Cottage Significance in Mount Dora

Since buying my homestead property in Mount Dora nearly 15 years ago, the Historic District has changed dramatically. Once filled with dilapidated old homes, the new residents of the Historic District have poured hundreds of thousands of dollars into restoring original bungalows and cottages or building new homes that attempt to meet the architectural guidelines of the area. Many smaller cottages have either been demolished (such as the home on the corner of Clayton and Ninth due to hurricane damage in 2004, and the 2-story farmhouse on Hackett Court being 2 such examples), or "re-muddled" with inappropriate additions and changes that do not meet the architectural style of the home or the neighborhood.

Originally, we bought the property at 844 N. Clayton simply to stop another historic home from being torn down and to prevent another large concrete block "bunker" being built right outside my dining room window. But the more I dug into the cottage, the more I realized that it was built from excellent materials and was still structurally sound. Materials like original 2" thick cypress roof boards, oak flooring, and ½ inch solid beadboard throughout portions of the interior of the cottage. These factors made me believe that restoration of the cottage was the right thing to do.

Certainly, it was in horrible condition needing a new roof, kitchen, bathroom, HVAC, and electrical upgrade, but as the house was termite free and structurally sound, we agreed to restore rather than destroy.

Florida Bungalow Neighborhoods have been specifically recognized for their historic significance by other Florida Cities such as Lake Worth (Palm Beach County), which has a significant number of Worker's Cottages in its historic district, many on 25' wide lots! Hillsboro County has set aside the Seminole Heights Neighborhood and Hyde Park area as historically significant areas of the City of Tampa which feature Florida Bungalows and cottages; and Jacksonville's Springfield Historic District with a mix of Victorian Four Squares, Bungalows and Cottages, several of which have been placed on the National Register of Historic Places (See, www. nationalregisterofhistoricplaces.com/ FL/) Many historic districts have recognized that the small worker's cottage makes up a significant portion of the history of the area and have significance by representing the typical home of the working-class residents.

Specific Architectural Characteristics of 844 North Clayton Street, Mount Dora

Our cottage is unusual for a typical Workers Cottage in that it had several custom features that would not be expected in a Worker's Cottage of the era. While only a one bedroom, it was equipped with indoor plumbing, oak floors, and ½ "thick beadboard on the ceilings and walls.

The property originally had a kerosene stove installed for heat that was plumbed to a chimney, and while the stove was no longer present when we purchased the property, the tall, thin chimney remained. The chimney was inspected to ensure it was still structurally sound, and once determined to be safe, it remains as part of the cottage's history.

While no serviceable original windows remained in the cottage when we purchased it, older photos show them as being 1 over 1 single hung windows, indicative of the period.

Restoration of the Property Since our Purchase in December 2004

We purchased the property knowing that it was in awful condition. We had known the Hernandez's for more than 18 years, and even before his illness, Greg was never one to keep up on maintenance projects.

The Cottage narrowly missed being crushed by a huge oak that fell during Hurricane Francis in 2004. The same tree destroying the home that was previously on the corner of 9th Ave. and Clayton St., and the same tree that damaged my roof at 834 N. Clayton. I thought that if the cottage could survive that storm, it deserved a second chance. I also knew that we had a major project on our hands but felt that the cottage was worth saving. We began the restoration only after proper permits and the certificate of appropriateness were issued.

To give an idea of the condition of the home at the time of purchase, the front roof was leaking and full of black mold, the shower pan was being held in place with an automotive bottle jack from beneath the house, and the floors were covered in "industrial grade" carpet which was laid over ancient linoleum.

The kitchen and bathroom had been the subject of a poorly executed 1970's renovation, and both were barely serviceable. In fact, the entry to the shower was through the bedroom closet, and the entry to the toilet was through the kitchen side, even though they were both contained in a 6x8 room.

The outside clapboard siding was covered in multiple coats of peeling paint, there was open plumbing under the cottage allowing sewer gas to escape into the home, and there was junk everywhere! Before we could start work, and while waiting for the permits to be issued, we took four full dumpster loads of junk out of the cottage as well as piles of debris left around the property to the landfill.

Electric Service

The first issue to be addressed and the biggest safety issue was updating the old and outdated four glass fuse electrical panel. It was located on the back of the home and the panel hooked up to some original knob and tube electric service. While it had survived for almost 80 years, it was a fire hazard. We hired a local electrician and, after proper permits were issued, had a new panel installed and relocated to a safer area of the home, and made sure that all the knob and tube wiring was removed and no longer in service.

Roof Repair and Replacement

While the main roof area didn't appear to be leaking, the front portion was clearly leaking badly resulting in black mold in the roofing boards of the front living room area. Once again, after the proper permits were issued, we removed the damaged sections, replaced the wet and rotting boards, and repaired the roof, replacing the old shingles with a three-dimensional architectural shingles. Unfortunately, due to supply chain interruptions caused by the pandemic, original style green shingles were not available, so we replaced them with a 3-tab architectural black shingle which is also a period color for the home. All repairs were inspected and passed by the City of Mount Dora Building Department.

Floors

The next job we tackled was the removal of the old carpet and linoleum. We stripped the floor to reveal original oak wood flooring in portions of the home, however, water damage and poorly executed prior repairs made restoration of the original oak floors financially impracticable. Rather than have a patchwork of flooring, I elected to use a high-grade vinyl flooring product that mimics the oak flooring, so that it could be removed without damaging the remaining original floors if we later decide to tackle the original floor repairs.

Bathroom

The existing bathroom was completely unserviceable, with the shower and toilet leaking and the drains blocked. We knew that the bathroom had "issues," but we did not expect to find rotten floors and crumbling pipes. The 1970's wall tile was cracked and peeling from the walls, so we began the process by removing all existing tile and repairing the water damaged wall boards. Once all repairs were completed, the bath was tiled in period style white subway tile and one inch hex dot black and white floor tile. The result is a clean, efficient bathroom that re-creates what could have been original to the home.

Kitchen

The kitchen was similarly butchered with a 1970s "renovation." A rusty avocado colored stove and peeling particle board counter and cabinets were removed along with the wall paneling. The new cabinets are simple white wood cabinets with a period style solid birch butcher block countertop, and white subway tile backsplash. A white quartz sink is fitted in the kitchen being as close to soapstone as I could find available due to supply chain interruptions. All new appliances were fitted including stove, refrigerator, and washer/dryer.

Windows

The cottage has a lot of windows for a 600 sq. ft residence. As previously noted, during the history of the house, all the original windows in the cottage had been removed and replaced with a mix of jalousie windows, awning windows, and vinyl windows. Replacing all the windows with wooden frame single hung windows was prohibitively expensive, so (with proper permits and certificate of appropriateness), we replaced all nine windows with period appropriate "one over one" high efficiency single hung design. This gives the cottage a uniformity that it did not have previously and provides an R factor of insulation as well, while maintaining the look of the original windows.

Siding

The original siding was wooden clapboard style siding but was in very bad condition with layers and layers of peeling paint and evidence of prior bug damage. Rather than try and remove and replace, we opted for the more economical choice of using a siding product that is similar to the original clapboard siding but is fully waterproof and which allowed us to line the underlayment with a vapor barrier and insulation before installing the siding. The siding was also approved by the Historic Preservation Board.

Paint & Interior

The cottage exterior had been painted a variety of colors for the entire 15 years I lived next door to it, with white on some areas, yellow in others and light green in yet other areas. We elected to paint the house a true cottage friendly light yellow with white trim and a soft-white interior color. Given that the cottage is only 600 sq. ft. in size, ensuring all rooms are light in color, along with the nine new windows providing plenty of light, makes the home feel much larger than it really is.

We were able to save the original dark stained bead board on the ceiling in the dining room and bedroom, as well as retaining the beadboard wainscotting on one wall in the bedroom. Period reproductions of Hunter Ceiling fans are installed in the dining room and bedroom to augment the air flow of the replacement HVAC system.

Floor Plan

While there are few choices in arranging a floor plan for a 600 sq. ft. home, I was insistent that we retain the original floor plan with the placement of bedroom, bathroom, and kitchen. The washer/dryer stack unit now occupy what was the back door utility room. So, the cottage remains as original in appearance both inside and outside, as possible.

Future Projects

We have made great strides in restoring the cottage to its original condition, yet there are still plans to continue improving the property.

Landscaping

The exterior is improving simply by removing truckloads of junk that was buried on the property and by doing basic lawn maintenance.

I hired a lawn company to bring in a bush-hog to cut down portions of the lawn that hadn't been cut in many years. Trees have been transplanted, and 4 yards of cypress mulch have been delivered and placed into garden beds.

A paver parking pad has been installed along N. Clayton St., and a paver patio is now next to the home to allow us to enjoy the cooler weather when possible.

Fencing

The property was surrounded by an old 4 ft. chain link fence that was in horrible disrepair due to storm damage dating back to 2004. We removed the fencing and simply eliminating the "prison yard" vibe that chain link fencing brings with it, giving the property a significant curb appeal improvement. Future plans include installing a white picket fence as finances permit.

Historic Significance to Mount Dora Historic District

I understand that "Historical Significance" is usually associated with a grand home in scale or a significant prior owner, however, in this case, I believe that the cottage is entitled to historic recognition as one of the last, if not the last remaining, "worker's cottage" in the Mount Dora Historic District. It represents how working-class residents of Mount Dora would have lived at the beginning of the 20th century.

Its heritage deserves to be protected from developers who would simply tear it down and build another concrete block monstrosity where it doesn't belong. There simply aren't any other "worker's cottages" still in their original form left. And to me, that is history worth preserving.

Conclusion

While the cottage located at 844 North Clayton Street may not have the historical significance of the Lakeside Inn or the Donnelly House, it does embody the true nature of the working-class Mount Dora citizen in the 1920's. The history of the cottage has been extensively researched and every effort has been made to restore the cottage in a fashion that would be historically accurate, while providing for the modern conveniences in a fashion that does not conflict with the 1920's style of the cottage.

Granting the cottage Historic Marker designation would help preserve the integrity of the property and preserve a small part of the history of Mount Dora for generations to come. As stated on the Mount Dora

Historic Marker Web page, [Granting the property Historic Recognition] "... *encourages the restoration and maintenance of historical properties located in Mount Dora."*

As a reference, both my home located at 834 N. Clayton St. and my brother's home located at 816 N. Clayton have already been granted Historic Marker recognition. Granting the cottage, which is the subject of this request, Historic Marker recognition would serve to increase the strength of the Mount Dora Historic District as all three homes are contiguous to each other.

I hope that you will consider the cottage at 844 N. Clayton St. as a candidate for a Mount Dora Historic Marker, and I invite members of the Historic Preservation Board to view the property at their convenience.

Thank you for your consideration.

Sincerely,

Lawrence G. Miceli

Enclosures:

- Application for Historic Marker
- Photos
- Historic Structure Survey dated 2008 and 2019
- Ownership Spreadsheet
- Copy of land survey
- Copy of Warranty Deed
- Copy of Tax Authority print out

Research sources cited in this letter include the following:

- City of Mount Dora Historic Preservation Design Guidelines (Mount Dora Historic Preservation Board, 2001)
- National Register of Historic Places, www.nationalregisterofhistoricplaces.com/FL/ Hillsborough/ districts.html and www. nationalregisterofhistoricplaces.com/ FL/)
- Chicago Workers Cottage Initiative https://workerscottage.org/
- Broadway-Fillmore, Buffalo, NY Intensive Level Historic Resources Survey
- Moss Design House, Chicago Building Types: Worker Cottage, http://moss-design.com/worker-cottage/
- Worker Cottages: A Nineteenth-Century Great Lakes Urban House Type https://www.pioneeramerica.org/past2011/past2011artmclennan.html
- The Old House Journal magazine; www.oldhousejournal.com/magazine/bungalows/ohj bungalow3.shtml
- The Story of Mount Dora by R.J. Long Street, (Mount Dora Historical Society, 1960)
- Memories of Mount Dora, from Then Until Now, by David R. Edgerton (David R. Edgerton, 1993)
- Official Records of Lake County, Florida.

Figure 1 Before Picture taken from corner of 9th and Clayton Street

Figure 2 Finished April 2022

Figure 5 Finished with Paver Parking

Figure 4 Original Bathroom

Figure 3 Finished Bathroom

The bathroom fixtures remain in the same location; however, the fiberglass shower enclosure was accessible only from a hole cut in the bedroom wall. The back of the shower enclosure appears directly next to the commode in the picture on the left.

Figure 6 Bedroom Before

Figure 7 Bedroom After

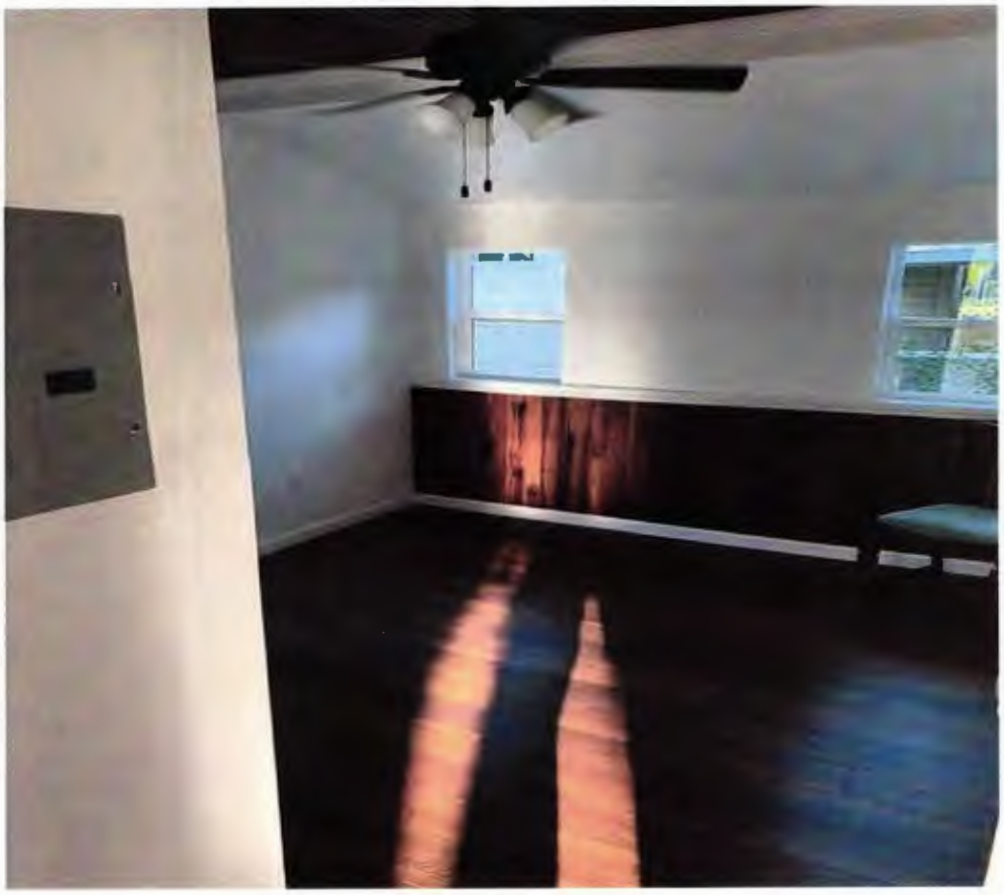

The bedroom remains the original size, but the camera angle makes it appear larger in the finished picture.

Figure 8 Kitchen Before

Figure 9 Kitchen After

Much of this original wall beadboard was used to repair the beadboard ceilings in the bedroom & dining area and the bedroom wainscoting.

Figure 11 Original Beadboard Wall

Figure 10 Linoleum Flooring

Figure 12 Finished Dining Area

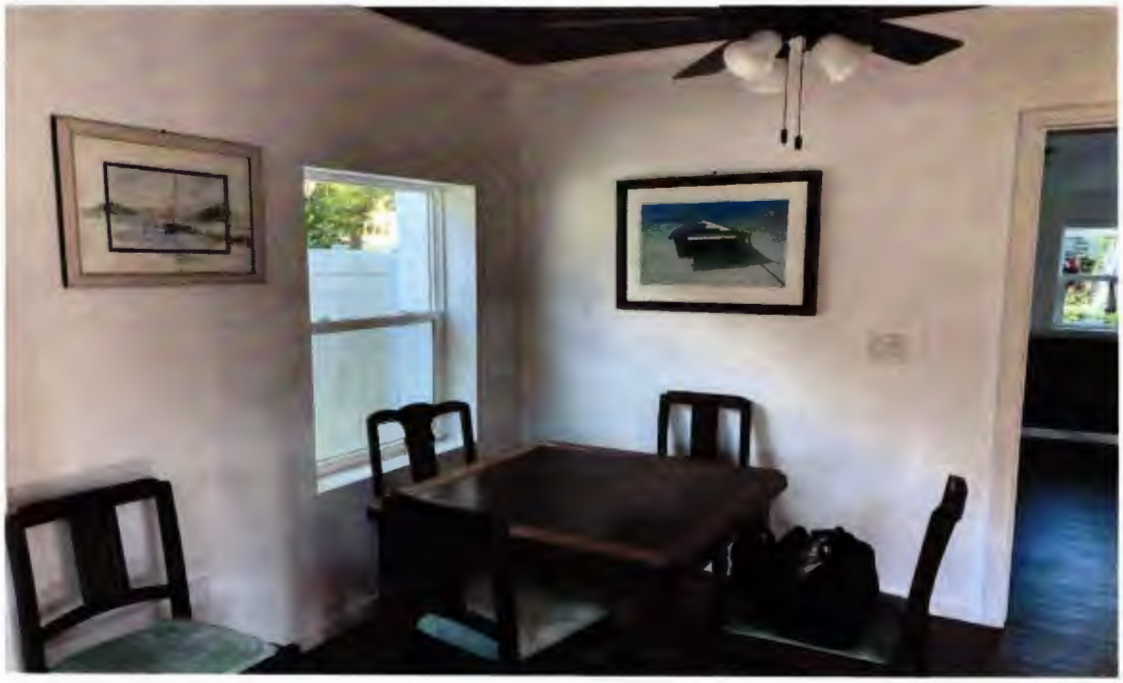

Figure 13 Finished Interior 1

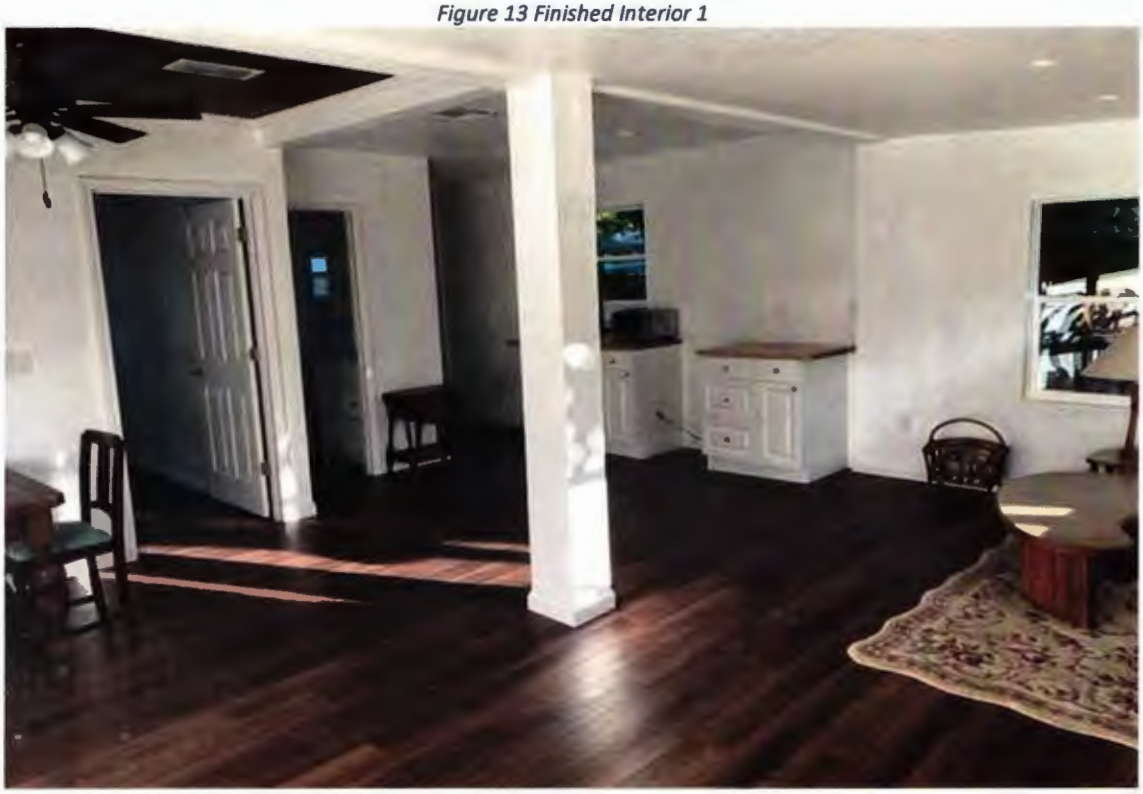

Figure 14 Finished Interior 2

Figure 15 2004 The Tree that Almost Destroyed the Cottage

BOUNDARY SURVEY OF:
Lot 2, WILDWOOD,
according to the plat thereof as recorded in
P[illegible]t Book 4, Page 57, of the
[illegible]ic Records of Lake County, Florida.

THIS SURVEY IS CERTIFIED TO:
LAWRENCE G. MICELI and MARK A. MICELI

FLOOD CERTIFICATION:
This is to certify that I have consulted the National Flood Insurance Flood Hazard Boundary Map and found the subject property is not within a special flood hazard area, according to Map No. 12069D 0367E, dated 12/18/2012. (ZONE X)

PROPERTY ADDRESS:
844 N. CLAYTON ST., MOUNT DORA, FL

BEARINGS BASED ON ASSUMED DATUM--The Southerly line of Lot 2 being N.90°00'00"W.

NOTES:
1) Subject to restrictions, reservations, easements and rights-of-way, if any, appearing of record.
2) Survey performed without the benefit of a title search.
3) Underground utilites and other below ground features, not located, other than shown.

LEGEND:
U.E.=Utility Easement
D.E.=Drainage Easement
U.& D.E.=Utility & Drainage Easement
(P)=Plat data
(D)=Deed data
(M)=Field measured data
(C)=Calculated data
F.=Found
F.C.=Fence corner
P.C.=Point of Curve
P.T.=Point of Tangency
P.C.C.=Point of Compound Curve
P.R.C.=Point of Reverse Curve
R/W=Right of way
LS=Land Surveyor
LB=Licensed Business
PSM=Professional Surveyor & Mapper
C/S=Concrete Slab
WPF=Wood Privacy Fence
WRF=Wood Rail fence
BWF=Barbed Wire Fence
WF=Wire Fence
MRF=Metal Rail Fence
CLF=Chain Link Fence
PF=Privacy Fence
WM=Water Meter
ETP=Electric Transformer Pad
TR=Telephone Riser
TVR=Cable TV Riser
CM=Concrete Monument
CBW=Concrete Block Wall

SCALE 1"=30'
0 30 60

N
W E
S

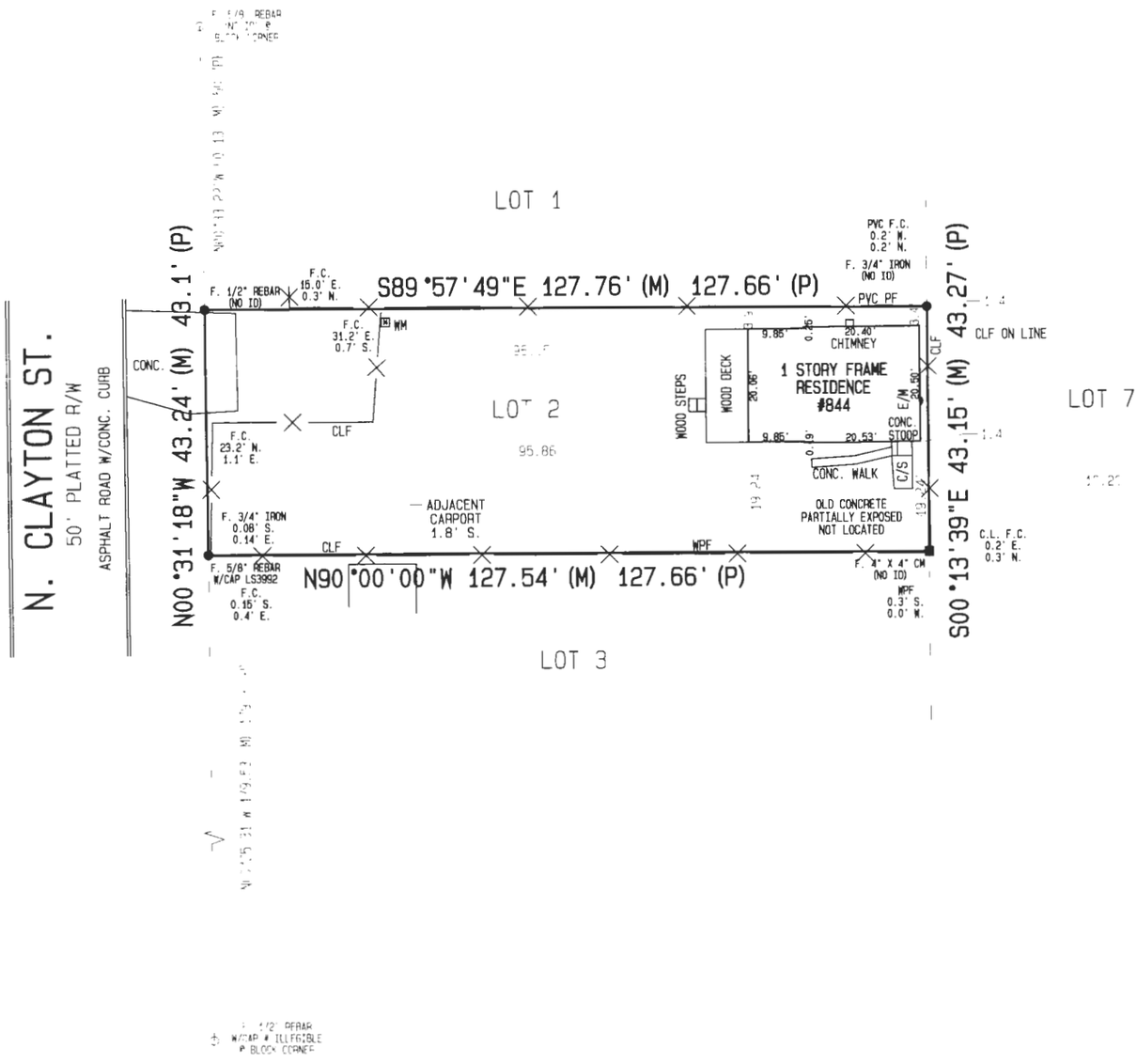

This survey is certified to and prepared for the exclusive benefit of the entities and/or individuals shown hereon, va[illegible] the most current date shown, an[illegible] not be relied upon by any other er[illegible] individual whatsoever.

There may be additional restrictions and/or other matters of record not shown on this Survey that may be found in the Public Records of the County or contained within the Title Commitment.

THIS DRAWING IS THE SOLE PROPERTY OF LANGFORD SURVEYING CFL, INC AND CANNOT BE EDITED IN ANY MANNER WITHOUT THE WRITTEN PERMISSION OF LANGFORD SURVEYING CFL, INC. OTHER THAN THE ORIGINAL CLIENT, REPRODUCTIONS OF THIS SKETCH ARE NOT VALID WITHOUT THE EXPRESSED WRITTEN PERMISSION OF LANGFORD SURVEYING CFL, INC. ©

Langford Surveying CFL, Inc.
931 N. State Road 434 Ste 1201
Altamonte Springs, FL 32714
407-332-7202 386-738-5080
www.langfordsurveying.com
jim@langfordsurveying.com

NOTE:
Date of survey may differ from date of signature. If so, the date of survey is the applicable date.

JAMES P. LANGFORD CERTIFICATE No. 3992 STATE OF FLORIDA REGISTERED SURVEYOR & MAPPER

DATE SIGNED: 7/31/2021
James P. Langford, P.L.S. 3992
VALID ONLY WITH AN AUTHENTICATED ELECTRONIC OR EMBOSSED SURVEYOR'S SEAL & SIGNATURE

Date of Survey:	Drawn by:	Checked by:	Scale:	File name/no.
7/30/2021	JPL	JPL	1"=30'	21-07/

ATTACHMENT #1

Date	Seller	Buyer	Type	Legal	Consideration	Or Book/Page	Notes
12/6/1923	Original Plat					Plat Book A/ pg 29	Attached Plat recorded. Platted by George Bidwell
12/18/1923	George L. & Ethel B. Bidwell	Jerome & Frances Bouton		Lot 2 Wildwood	10.00	101/265	
2/24/1941	Jerome & Cora Bouton	Albert T. Whitman	WD	Lot 2 Wildwood	10.00	188/428	This deed makes reference to a deed to the Grantors (Jerome H. Bouton) dated 12/18/1923 OR book 101 pg 265. Also established that Frances Bouton had died.
5/7/1945	Susan May Fagen	Fred R. & Lillian C. Parciany				257/155	Fagen was also from New York. This deed states that Susan May Fagen received the property by the Last Will of Albert T. Witman.
9/11/1946	Fred R. Parciany & Lillian C. Parciany	John H. Sweenburg & Laura N. Sweenburg	WD	Lot 2 Wildwood	2000.00	257/374	This deed cites the prior deed Fagen to Sweenburg 5/7/45. This deed was notqarized in New York State.
9/28/1948	John H. Sweenburg & Laura N. Sweenburg	Daniel P. North & Albert S. North	WD	Lot 2 Wildwood		280/103	
5/17/1955	Albert S. North & Frances A. North	Juliana Weed & George Weed	WD	Lot 2 Wildwood		370/353	
1/22/1958	Juliana N. Weed & George W. Weed	Cora L. Byers	WD	Lot 2 Wildwood	10.00	37/649	
9/28/1966	1st Natl Bank Mt. Dora as Executor of Estate of Cora Byers	Mary Anna Byers	WD	Lot 2 Wildwood	0	321/351	Mary Ann Byers also owned Lot 3. Her interest in Lot 3 descended by will to the Culvers. SO Lot 2 & 3 were owned together in the late 50's to the mid 60's.
10/13/1966	Mary Anna Byers	George L Kress & Drucilla N. Kress	WD	Lot 2 Wildwood		322/224	Kress also owned Lot 1 purchased on 11/25/1958. Purchased Lot 1 on 11/25/1958 OR88/PG437
4/4/1977	George L. & Drucilla N. Kress	Stanley & Ruth Arthurs	WD	Lots 1 & 2	$ 27,900.00	626/1304	Mt recorded for $27.9K 626/1305
6/1/1983	Stanley & Ruth Arthurs	Lawrence & Mabel Wages	WD	Lot 1 & 2 Wildowood	$ 10.00	778/454	Parcel was owned by corner lot.
3/1/1988	Lawrence & Mabel Wages	Jerry Rich & Vula Havens	WD	Lot 1 & 2 Wildowood	$ 65,000.00	956/986	
3/1/1990	Jerry Rich	Vula Havens	QCD	Lots 1&2 Wildwood	$ 10.00	1051/1933	
6/1/1991	Vula Havens	Vula Havens	WD	Lot 2 Wildwood		1111/283	Here Vula Havens splits the properties into 2 pacrels again. Not necessary, but she did it.
12/1/1994	Vula Havens	Greg Hernandez & Christine Potts	WD	Lot 2 Wildwood		1334/1284	Doc Stamps paid $194.00
4/19/2001	Greg Hernandez & Christine Potts	Greg Hernandez & Christine Hernandez husband and wife	WD	Lot 2 Wildwood	$ 10.00	1952/463	
9/1/2020	Greg Hernandez & Christine Hernandez	Lawrence Miceli & Mark Miceli (TIC)	WD	Lot 2 Wildwood	$ 60,315.81	5537/2158	Our original purchase date
3/29/2021	Lawrence Miceli & Mark Miceli as TIC	Lawrence Miceli and Mark Miceli JTWRS	QCD	Lot 2 Wildwood	$ 10.00	5709/208	change from Tenants in Common to JTWRS

Let it be known that the

Bouton Cottage

844 N. Clayton Street

Owned by Lawrence G. & Mark A. Miceli

Is presented this

Certificate of Historic Significance

For its historical significance to the City.

Awarded this 5th day of July, 2022

By the City of Mount Dora City Council

As recommended by the Historic Preservation Board.

_____	/s/ Det Joks, Chairman
Crissy Stile, Mayor, City of Mt. Dora	*Historic Preservation Board Chairperson*

510 N. Baker St.
Mount Dora, FL 32757
352-735-7126

DATE: **July 5, 2022**

TO: **Honorable Mayor and City Council Members**

FROM: **Patrick C. Comiskey, City Manager** Patrick C. Comiskey

SUBJECT: Request Approval of Amendment to the Interlocal Agreement between Lake County and the City of Mount Dora for Library Services

---

Introduction:
This is a request for the City Council to approve the Amendment to the Lake County Library System Interlocal Agreement.

Discussion:
The W.T. Bland Public Library is a member of the Lake County Library System, which is governed by the Interlocal Agreement between Lake County and the ten city-owned member libraries (Attachment 1). This agreement expires on September 30, 2022. Normally, this agreement is renewed every three years, but Lake County is instead requesting an amendment to the existing agreement providing a one-year extension.

Included in the Interlocal Agreement is the appropriation formula that partially compensates city libraries for the non-resident use of their libraries and collections. This formula includes a base annual payment of $15,000 and then a proportionate share of the allocated County funds distributed based upon the libraries' circulation rates. County staff have long wanted to replace circulation with other metrics but they haven't been successful in convincing city library directors to make this change. Most of the proposed metrics, such as operating expenses and collection budgets, would not have been beneficial for the City of Mount Dora, since its library's operating ratios are among the lowest of all the city libraries in Lake County.

The amendment includes the following changes:

- Extending the existing Interlocal Agreement by 12 months, terminating on September 30, 2023.
- Increasing the annual base amount for each city library from $15,000 to $20,000.

The Lake County Library System Interlocal Agreement has served the libraries and their communities well since 1986, when Mount Dora joined the cooperative. The Lake County Library System provides a coordinated and high quality delivery of library services to all the residents of Lake County and the Interlocal Agreement is critical for maintaining that cohesion.

The Mount Dora Library Advisory Board voted unanimously to recommend City Council to approve this Amendment at its meeting on Monday, June 13, 2022.

Budget Impact:

In addition to the annual appropriation, the Interlocal Agreement results in significant cost savings to the City of Mount Dora. All networked public PCs and printers are supplied, maintained and managed by the cooperative. The Library's Wi-Fi is provided by the cooperative, as are databases and access to volume discount contracts with publishers.

Strategic Impact:

Membership in the Lake County Library System remains of vital importance to the City of Mount Dora, for both reduced operating expenses as well as providing a greatly increased array of materials available to Mount Dora residents.

Recommendation:

City Council to approve the Amendment to the Lake County Library System Interlocal Agreement.

Attachment(s):

1. Attachment 1 - 2019 Signed Interlocal Library Agreement-07182019145725
2. Amendment_Library Services Mount Dora 06082022

Prepared by:	Cathy Lunday, Library Director	
Reviewed by:	Sherry Sutphen, City Attorney	Approved - 6/27/2022
	Jessica Burnham, City Clerk	Approved - 6/27/2022
	Jeanann Hand, Deputy City Clerk	Approved - 6/27/2022
	Patrick Comiskey, City Manager	Final Approval - 6/27/2022

RESOLUTION NO. 2019-93

A RESOLUTION OF THE CITY OF MOUNT DORA, FLORIDA, PERTAINING TO THE INTERLOCAL AGREEMENT WITH LAKE COUNTY FOR THE PROVISION OF LIBRARY SERVICES; PROVIDING FOR LEGISLATIVE FINDINGS AND INTENT; PROVIDING FOR INTERLOCAL AGREEMENT AUTHORIZATION; PROVIDING FOR THE IMPLEMENTATION OF ADMINISTRATIVE ACTIONS; PROVIDING A SAVINGS CLAUSE; PROVIDING FOR SCRIVENER'S ERRORS; PROVIDING FOR CONFLICTS; PROVIDING FOR SEVERABILITY; AND PROVIDING AN EFFECTIVE DATE.

WHEREAS, the Lake County Board of County Commissioners (Lake County) is the governing body which coordinates library services and programs for the public library cooperative in Lake County; and

WHEREAS, the City of Mount Dora (City) operates a public library within the jurisdictional limits of the City that is part of the Lake County public library cooperative; and

WHEREAS, the City and Lake County have agreed that it is in the best interest of the public to have equal access to public library services, without charge, for all residents of the City of Mount Dora and Lake County; and

WHEREAS, the City and Lake County have developed an Interlocal Agreement which best fits their mutual needs and the public interest.

NOW, THEREFORE, BE IT RESOLVED BY THE CITY OF MOUNT DORA, FLORIDA, AS FOLLOWS:

SECTION 1. Legislative Findings and Intent. The City of Mount Dora has complied with all requirements and procedures of Florida law in processing this Resolution. The above recitals are hereby adopted.

SECTION 2. Interlocal Agreement Authorization. The City Council hereby authorizes the Mayor to execute the Interlocal Agreement, related to public library services, attached hereto as **Exhibit "A"**.

SECTION 3. Implementing Administrative Actions. The City Manager is hereby authorized and directed to take such actions and execute said lease agreements as may be deemed necessary and appropriate in order to implement the provisions of this Resolution. The City Manager may, as deemed appropriate, necessary and convenient, delegate the powers of implementation as herein set forth to such City employees as deemed effectual and prudent.

SECTION 4. Savings Clause. All prior actions of the City of Mount Dora pertaining to the Interlocal Agreement with Lake County for the provision of library services, as well as any and all matters relating thereto, are hereby ratified and affirmed consistent with the provisions of this Resolution.

SECTION 5. Scrivener's Errors. Typographical errors and other matters of a similar nature that do not affect the intent of this Resolution, as determined by the City Clerk and City Attorney, may be corrected.

SECTION 6. Conflicts. All Resolutions or parts of Resolutions in conflict with any of the provisions of this Resolution are hereby repealed.

SECTION 7. Severability. If any Section or portion of a Section of this Resolution proves to be invalid, unlawful, or unconstitutional, it shall not be held to invalidate or impair the validity, force, or effect of any other Section or part of this Resolution.

SECTION 8. Effective Date. This Resolution shall become effective immediately upon its passage and adoption.

PASSED AND ADOPTED this 16th day of July, 2019.

NICK GIRONE
MAYOR of the City of Mount Dora, Florida

ATTEST:

GWEN KEOUGH-JOHNS, MMC
CITY CLERK

For the use and reliance of City of Mount Dora only.
Approved as to form and legality.

Sherry G. Sutphen
City Attorney

EXHIBIT "A"
Interlocal Agreement with Lake County related to
Public Library Services

INTERLOCAL AGREEMENT BETWEEN LAKE COUNTY AND THE CITY OF MOUNT DORA RELATING TO PROVISION OF LIBRARY SERVICES

This is an Agreement between LAKE COUNTY, a political subdivision of the State of Florida, hereinafter referred to as "COUNTY", by and through its Board of County Commissioners, and the City of Mount Dora, a municipal corporation pursuant to the laws of Florida, located in Lake County, Florida, hereinafter referred to as "MUNICIPALITY" or "CITY".

WITNESSETH:

WHEREAS, the COUNTY and MUNICIPALITY believe it is mutually beneficial and in the public interest to enter into an agreement which provides equal access to public library services, without charge, for all residents of Lake County; and

WHEREAS, Chapter 163, Florida Statutes, Intergovernmental Programs, Part I, Miscellaneous Programs, Section 163.01, The Florida Interlocal Cooperation Act of 1969, provides that public agencies of the state of Florida may exercise jointly with any other public agency of the state of Florida any power, privilege, or authority which such agencies share in common, and which each might exercise separately, and that a joint exercise of power by such agencies may be made by contract in the form of an interlocal agreement; and

WHEREAS, both the COUNTY and the MUNICIPALITY are public agencies within the meaning of Chapter 163, Florida Statutes, Intergovernmental Programs, Part I, Section 163.01; and

WHEREAS, Chapter 166, Florida Statutes, subsection 166.021(1), authorizes the MUNICIPALITY to render municipal services, and exercise any power for municipal purposes, except when expressly prohibited by law; and

WHEREAS, Chapter 125, Florida Statutes, subsection 125.01(1)(f), authorizes the COUNTY to provide libraries and cultural facilities and programs; and

WHEREAS, the COUNTY is an eligible political subdivision under Chapter 257.17, Florida Statutes, that can participate in the State Aid to Libraries Program and is designated as the single library administrative unit; and

WHEREAS, the Lake County Board of County Commissioners is designated as the governing body that coordinates the library services and programs for the public library cooperative.

NOW, THEREFORE, in consideration of the mutual benefits, covenants and agreements set forth herein, the parties hereto agree as follows:

1. PURPOSE:

The COUNTY and the MUNICIPALITY enter into this Agreement for the purpose of providing unified library services without charge to residents of Lake County by participating in the cooperative operation of the Lake County Library System, a public library cooperative. In support of said purpose the COUNTY and the MUNICIPALITY endorse the overarching goal of the *State Aid to Libraries Program* which is to assist local governments in maintaining and developing vital library services, and specifically to:

A. Provide equal access to free public library services to all residents in the service areas of the participating governments.

B. Coordinate library service throughout the service areas.

C. Provide consistent plans, programs, policies, and procedures in the operation, maintenance, and development of library services throughout the service area.

2. DEFINITIONS:

A. "Annual plan of service", according to *State Aid to Libraries Guidelines,* means a document adopted or approved by the library system's governing body and submitted as part of the application for State Aid to Libraries grants that includes the goals, objectives, and activities that will be supported for the application year.

B. "Governing body" shall mean the Lake County Board of County Commissioners.

C. "Library Advisory Board" shall mean the Lake County Library Advisory Board.

D. "Lake County Library System" shall mean the entire program of free library services and resources provided for the residents of Lake County through the public library cooperative established through this Agreement and Lake County Code, Chapter 12, Article III.

E. "Local funds", according to *State Aid to Libraries Guidelines*, means funds, exclusive of any state and federal funds, that are expended centrally for the operation and maintenance of the Lake County Library System. Local funds may be COUNTY funds or municipality funds and shall be expended by the appropriate local entity. Funds which would otherwise be received by and expended by the municipality except for this agreement shall constitute the municipality's local funds.

F. "Participating Library's governing body" means the municipality that operates and supports a public library and participates in the Lake County Library System through an Interlocal agreement.

G. "Participating Library" or "Member Library" means a library which, through its governing body, has entered into an Interlocal Agreement with Lake County to provide library service, without charge, to the residents of Lake County.

H. "Public library cooperative" shall mean the Lake County Library System and, according to *State Aid to Libraries Guidelines*, means a program of public library services and resources operated or coordinated by a governing body designated by one or more participating local governments. The governing body administers or coordinates, through a single administrative head, the common services for libraries operated by those participating local governments that have agreed through interlocal or other agreements to provide library service across their combined legal service areas. The single administrative head must be employed full- time by either the cooperative's governing body or a local participating government. Interlocal or other agreements identify the authority of the governing body and the participating local governments and the libraries each supports. Residents of the combined legal service area have equal free access to all services provided by the libraries of all the participating local governments.

I. "Reciprocal Borrowing" for purposes of the State Aid to Libraries Grant Program means that all public libraries within a county that receive Operating Grants extend borrowing privileges without charge to residents of each other's service areas. Borrowing privileges must apply to all materials that are available to be borrowed by residents of the library service area receiving an Operating Grant. The reciprocal borrowing requirement only applies to a county and the independent municipal libraries within the same county that are applying for State Aid.

J. "Resident" shall mean any individual who either owns real property or resides in Lake County on a permanent or continual basis. Required evidence of residency is outlined in Lake County Policy number LCC-8, *Lake County Library System Circulation and Registration.*

K. "Service area" shall mean Lake County. Likewise, for each participating municipality, service area means the incorporated boundaries of that municipality; and in the case of the City of Leesburg, service area means the utility district.

L. "Single administrative head", according to *State Aid to Libraries Guidelines*, means the individual who is employed full-time by the Board of County Commissioners who is responsible for managing or coordinating the Lake County Library System.

M. "Single library administrative unit" means Lake County and, according to *State Aid to Libraries Guidelines*, means an eligible political subdivision under Section 257.17, *Florida*

Statutes, designated by a county to be responsible for managing or coordinating free library service to its residents.

N. "State Aid to Libraries Grants Program", according to *State Aid to Libraries Guidelines,* means a continuing state grant authorized by Chapter 257, *Florida Statutes*, for eligible library entities.

O. *"State Aid to Libraries Guidelines",* means the publication which specifies mandatory requirements for eligibility in the State Aid to Libraries Grants Program.

P. "Total Circulation" for the purposes of this Interlocal Agreement shall mean the sum of all items circulated by the MUNICIPALITY to library patrons and all items circulated by the MUNICIPALITY to another Lake County Library System library in a fiscal year, based on circulation reports generated by the library automation system.

3. TERM:

This Agreement shall be in effect for a period beginning October 1, 2019, and ending on September 30, 2022, unless terminated earlier in accordance with the provisions of the Agreement.

4. TERMINATION:

Either party may terminate the Agreement without cause by giving the other party sixty (60) days advance written notice.

5. ADDITION OF NEW MEMBERS:

A library may become a member of the Lake County Library System by meeting the criteria and following the guidelines outlined in Lake County Policy number LCC-7, *Lake County Library System Guidelines and Minimum Standards for Public Libraries Entering the County Library System* and by obtaining approval of the Board of County Commissioners.

6. LAKE COUNTY LIBRARY SYSTEM GOVERNING BODY:

The Board of County Commissioners is designated as the governing body of the Lake County Library System, a public library cooperative, to administer or coordinate the library services and programs of the Lake County Library System. According to *State Aid to Libraries Guidelines,* this involves policy-making, planning, budgeting, and employing the single administrative head of the library system and entering into contracts on behalf of the library system.

7. LIBRARY ADVISORY BOARD:

A. There shall be a Library Advisory Board, whose responsibilities shall be to:

(1) Study and make recommendations to the Board of County Commissioners regarding the coordination and development of the Lake County Library System. This shall include recommending countywide policies, long range plans and annual plans of service and shall be accomplished in cooperation with the participating library directors and the single administrative head; and

(2) Make recommendations regarding the COUNTY's budget for the countywide library system, the proportionate shares of all COUNTY funds to be allocated to the participating libraries, and the method of distribution of those funds.

B. The members of the Lake County Library Advisory Board shall be appointed by the Board of County Commissioners. Five (5) members shall be appointed with one (1) from each commission district. Such appointments shall be based on recommendations by the Lake County Library Advisory Board. However, the Lake County Board of Commissioners shall not be bound by such recommendations. In addition, the City shall have one (1) member on the Lake County Library Advisory Board who shall be designated by its City Council. Upon designation, the City member shall be appointed by the Board of County Commissioners. Each member shall be appointed for a term of four (4) years. The Board of County Commissioners may also appoint an alternate member who shall serve in the case of the appointed member's absence. The terms and manner of appointment of such alternate members shall be the same as that of the member whom he/she is representing as an alternate. Alternate members may attend Library Advisory Board meetings and shall have voting authority only if filling in as an alternate for an absent board member.

An appointment to fill any vacancy on the Library Advisory Board shall be for the remainder of the unexpired term of office. If the City appointment fails to attend three (3) consecutive regular meetings, the Library Advisory Board may recommend that the Board of County Commissioners or the Municipality declare the member's office vacant. The Board of County Commissioners or Municipality shall fill such vacancy as set forth herein.

The subsequent addition of participating libraries shall result in the addition of one seat per additional participating library on the Library Advisory Board and such seat shall be filled as set forth herein.

C. Terms of appointment and composition of the Library Advisory Board are further

described in *Lake County Code, Chapter 12, Article III.*

8. OWNERSHIP AND DISPOSITION OF PROPERTY, MATERIALS AND EQUIPMENT:

A. MUNICIPALITY shall own:

(1) Library materials, equipment, and other goods purchased by the COUNTY for and placed in the participating library using MUNICIPALITY, COUNTY or State Aid Operating grant funds, regardless of value, except for those described in Section 8. B.

(2) Library materials, equipment and other goods purchased from federal Library Services and Construction Act (LSCA) and Library Services and Technology Act (LSTA) grant funds administered by the COUNTY, if purchased for the MUNICIPALITY, with a value less than $1,000.00 at the time of purchase, except for those described in Section 8(B).

(3) All items purchased using the MUNICIPALITY's local funds.

(4) All items purchased by the MUNICIPALITY and reimbursed by Library Impact Fee funds, unless otherwise specified in a separate agreement.

B. COUNTY shall own:

(1) Items purchased by the COUNTY, using COUNTY, state, or federal funds, as a part of the COUNTY's networked library computer and telecommunications systems, regardless of item location or placement. Items shall include, but may not be limited to, hardware, software, and licenses.

(2) Equipment purchased from federal Library Services and Construction Act (LSCA) and Library Services and Technology Act (LSTA) grant funds administered by the COUNTY with a value in excess of $1,000.00 at the time of purchase.

(3) All items purchased for the single administrative unit using the COUNTY's local funds, or State Aid Operating and federal grant funds.

(4) All items purchased by the COUNTY using Library Impact Fee funds, unless otherwise specified in separate agreement.

C. The COUNTY, in consultation with the participating library director, may remove, relocate, or replace COUNTY owned equipment located at the MUNICIPALITY's participating library as deemed necessary or advantageous to the Lake County Library System.

9. LOCAL AUTHORITY:

The MUNICIPALITY and the COUNTY shall remain autonomous and each shall retain control of its facilities, operations, functions, and local funds. For example:

A. Each shall determine the level of library service for its community to be incorporated in the long-range plan of service.

B. All authority with respect to MUNICIPALITY funding of library programs and services or expenditures from the MUNICIPALITY revenues and sources shall lie solely with the MUNICIPALITY. All authority with respect to COUNTY funding of library programs and services or expenditures from the COUNTY revenues and sources shall lie solely with the COUNTY.

C. Trust funds, individual gifts or donations made to a library shall remain the property of the governmental entity to which they were given.

D. The MUNICIPALITY's library facility shall remain the property of the MUNICIPALITY, and the COUNTY's facilities shall remain the property of the COUNTY. Operations, maintenance and repairs shall be affected through operating budgets from appropriations allocated by the owning entity. Maintenance, modification, sale or lease of real property shall be the responsibility of the owning entity.

E. All paid staff, of the MUNICIPALITY's participating library, shall remain employees of the MUNICIPALITY, and all paid COUNTY library staff shall remain employees of the COUNTY. Each shall retain all rights, responsibilities and powers associated with employment of staff.

10. SINGLE ADMINISTRATIVE HEAD:

A. According to established COUNTY policies and procedures, the Board of County Commissioners is responsible for hiring the single administrative head, who shall be employed full-time, and shall be under the supervision of the County Manager or designee. The single administrative head shall be the head of the Lake County Library System, a public library cooperative, and according to *State Aid for Libraries Guidelines* shall have completed a library education program accredited by the American Library Association and shall have had at least two years of successful, full-time paid professional experience, after completing the library education program, in a public library that is open to the public at least forty (40) hours a week. The Board of County Commissioners may establish additional qualifications for the single administrative

head and shall set positions, salary structure and benefits.

B. According to *State Aid for Libraries Guidelines*, the single administrative head shall be responsible for the overall management or coordination of the library system within the framework established by this Interlocal or other agreements, plans, policies, and budgets. Responsibility for managing or coordinating the following activities may not be delegated through Interlocal or other agreements:

(1) Development of a single long-range plan for all library outlets;

(2) Development of a single annual plan of service;

(3) Development of a Lake County Library System budget;

(4) Implementation of the long-range plan, an annual plan of service and the budget;

(5) Preparing reports on behalf of the library system; and

(6) Expending all State Aid to Libraries grants.

11. LONG RANGE PLAN FOR LIBRARY SERVICE, ANNUAL PLAN OF SERVICE AND COMBINED BUDGET:

A. According to *State Aid to Libraries Guidelines*, in order to be eligible to receive a State Aid to Libraries Grant, the Lake County Library System shall have on file with the State Library a current copy of the following:

(1) A long-range plan adopted or approved by the library system's governing body outlining the library system's operation and development over a three to five-year period;

(2) A current annual plan of service adopted by the library system's governing body and submitted as part of the application for State Aid to Libraries grants that includes the goals, objectives, and activities that will be supported for the application year; and

(3) A combined budget for the current year adopted by the library system's governing body.

B. The single administrative head shall develop and implement a long-range plan for the operation and development of county-wide library service. The long-range plan shall be developed in cooperation with the Library Advisory Board, the governing bodies of the participating libraries, the directors of the participating libraries and the Board of County Commissioners. The single administrative head and the participating library directors shall serve

as support staff. The Board of County Commissioners shall adopt the long-range plan at a public hearing. Prior to adopting the long-range plan, the Library Advisory Board shall review and make recommendations to the Board of County Commissioners. The Board of County Commissioners shall consider these recommendations but shall not be bound thereby. The plan shall be reviewed and updated yearly through the development of an annual plan of service.

C. The annual plan of service will be based on the long-range plan of service and the combined budget; and will be developed by the single administrative head in cooperation with participating library directors, and the Library Advisory Board. In adopting the annual plan of service, the Board of County Commissioners shall consider the recommendations of the Library Advisory Board but shall not be bound thereby.

D. There shall be a combined budget for library service to the residents of Lake County. The budget shall be developed along a fiscal year ending on September 30 of each year. Upon adoption by the MUNICIPALITY, the MUNICIPALITY shall present its line item budget for library services to the single administrative head for inclusion in the combined budget. The combined budget shall include and take into account funds allocated by participating governing bodies, aid received from state and federal sources, and all other revenues received to provide library services. The combined budget shall be adopted by the Board of County Commissioners. The combined budget shall not include funds to be expended for the purchase or construction of a library building.

E. In accordance with *State Aid to Libraries Guidelines*, the COUNTY and the MUNICIPALITY agree to spend funds in accordance with the Lake County Library System's long-range plan, annual plan of service, and budget for those funds that the Lake County Library System will report on a State Aid application as having been expended centrally.

12. FISCAL RESPONSIBILITY:

The COUNTY shall procure an independent audit annually of all funds administered by the single administrative head. The audit shall be prepared and presented to the MUNICIPALITY and to the State Library of Florida within thirty (30) days following acceptance of the audit by the COUNTY.

The MUNICIPALITY shall provide a copy of its audit for each fiscal year to the COUNTY and the single administrative head within thirty (30) days following acceptance of the audit by the MUNICIPALITY. By August 1 of each year, the MUNICIPALITY shall submit to the COUNTY

a completed *Certification of Local Operating Expenditures* form, Attachment A, accompanied by a supporting general ledger that details line item expenditures for library operations for the preceding fiscal year, which shall be used to support the Lake County Library System's application for a State Aid Operating grant and the appropriation of COUNTY funds for the MUNICIPALITY.

13. APPROPRIATION OF COUNTY FUNDS FOR MUNICIPALITY:

A. The COUNTY shall allocate a base amount of fifteen thousand dollars ($15,000) per year to the MUNICIPALITY to assist with funding of programs and services at its participating library. In addition to the annual base amount, the COUNTY shall distribute to the MUNICIPALITY its share of the total amount to be appropriated to all member libraries that year, less the total of the base amounts to all of the member libraries, based on the MUNICIPALITY's total circulation for the fiscal year prior to the previous fiscal year. Therefore, the total amount to be appropriated to the MUNICIPALITY for provision of countywide library services shall be the base amount, plus the proportionate share of the net total appropriation. This distribution shall be calculated as follows:

- Total amount appropriated to the MUNICIPALITY
- Base amount
- The MUNICIPALITY's percentage share of all member libraries' total circulation for fiscal year prior to previous fiscal year
- Total Appropriation to all member libraries for current fiscal year
- Number of member libraries $a = b + c * [d - (b * e)]$

B. In consideration of these allocations the MUNICIPALITY:

(1) Shall provide library services to all residents of the COUNTY;

(2) Shall use COUNTY funds to enhance current library services provided by its participating library;

(3) Shall make its best effort to maintain or exceed the current level of its local operating funds for the library budget;

(4) Shall not use COUNTY funds annually allocated to the MUNICIPALITY for the purchase or construction of a library building.

(5) Shall enter and maintain accurate patron records on the Lake County patron database.

C. It is the intent of the parties that the distribution of COUNTY funds to the various

participating libraries be made on a fair and equitable basis. Accordingly, the formula for disbursing COUNTY funds to participating libraries set forth in Section 13(A) above may be changed only upon the approval of all of the participating libraries' governing bodies and the Board of County Commissioners.

D. The COUNTY shall make its best effort to maintain or exceed the current level of its total appropriation to all participating libraries; however, the COUNTY may propose an increase or decrease based on current financial circumstances or changes in library services. The COUNTY shall not decrease the total appropriation to all participating libraries unless it gives four (4) months advance notice to the participating libraries and their governing bodies of its intent to reduce said funding levels.

E. When a MUNICIPALITY requests to join the Lake County Library System, the municipality shall receive a graduated payment for year one and year two, with a full payment in year three, as follows:

- Year One: Base Amount of $15,000.
- Year Two: Base Amount of $15,000 plus an additional $15,000 for intra-library loans to other Lake County Libraries.
- Year Three: Funding formula as identified in Section 13(A) above.

14. CENTRALIZED SERVICES:

The COUNTY shall provide the following centralized services to the MUNICIPALITY's participating library:

A. Courier service to route materials and equipment among libraries;

B. Intra-library loan services;

C. Centralized cataloging of library materials, maintenance and oversight of the bibliographic database;

D. Purchasing from State Aid Operating grant funds and Library Services and Technology Act grant funds for the benefit of the Lake County Library System;

E. Networked telecommunications and computer systems services as described in Section 15;

F. Coordination and/or funding of other centralized services where feasible such as, but not limited to, subscriptions to digital resources and other formats;

G. Coordination of youth and adult programming and literacy services.

15. NETWORKED SYSTEMS:

A. The COUNTY shall provide and maintain networked library automation and telecommunications systems. The COUNTY shall be responsible for providing systems hardware, software, maintenance, technical support, monitoring, installation, and services. The COUNTY shall further enhance or add networked systems in accordance with the goals and objectives of the long-range plan and annual plan of service and based on availability of funds.

B. The COUNTY shall pay maintenance costs for all equipment attached to the COUNTY's networked systems and purchased with COUNTY, state or federal funds, and Library Impact Fees awarded to COUNTY, except as outlined in Section 15(D)(1).

C. The COUNTY shall provide staff to perform networked systems administration which shall include: technology planning, training, preventative maintenance, systems monitoring, trouble-shooting, running of required backups, resolution of systems problems, monitoring of system needs, running and creating statistical reports, insuring systems security, procurement of equipment, development and maintenance of Lake County Library System web pages, development of participating library web pages upon request, maintenance of staff e-mail accounts, acting as a liaison with network vendors, installation of peripheral equipment and devices, and technology grants application and administration. Assigned COUNTY staff shall be available to perform the above during library operating hours in a reasonable amount of time and shall have the authority to prioritize requests for assistance.

D. Networked library systems shall be provided by the COUNTY to the MUNICIPALITY at no cost to the MUNICIPALITY except as specified below:

(1) The MUNICIPALITY reserves the right to expand, at its own expense, the COUNTY's networked systems at its participating library to levels exceeding those provided by the COUNTY in consultation with the single administrative head and provided said expansion meets the COUNTY specifications. At the request of the participating library, such equipment may be paid for with State Aid funds, if available, at the discretion of the COUNTY. The MUNICIPALITY shall be responsible for associated costs including, but not limited to, maintenance, licenses, installation, and software of any non-COUNTY owned equipment. The COUNTY may provide technical support where feasible.

(2) The MUNICIPALITY shall, at its own expense, provide proper electrical

and data wiring of its participating library facility, according to specifications provided by the COUNTY, to insure proper operation of the networked systems. At the request of the participating library, necessary wiring expenses may be paid by the COUNTY with State Aid funds, if available, at the COUNTY's discretion.

(3) The MUNICIPALITY shall, at its own expense, make available at its participating library any telecommunications lines necessary to the operation and maintenance of any networked library computer systems. The MUNICIPALITY shall cover costs of associated installation, maintenance and monthly telecommunications charges.

(4) The MUNICIPALITY shall, at its own expense, provide supplies at its participating library that are pertinent to the operation of the networked systems such as printer paper, printer ink cartridges and drums, item barcodes, etc. Patron cards and patron registration forms shall be provided by the COUNTY to the MUNICIPALITY at no charge. The COUNTY may choose to provide other automation supply items to the MUNICIPALITY at no charge.

E. The MUNICIPALITY shall participate in the centralized cataloging program and adhere to County procedures to ensure the integrity of the combined bibliographic database.

F. Neither the MUNICIPALITY nor its participating library shall attach equipment or software to any COUNTY networked system without prior written approval from the single administrative head or designee; or remove equipment or software purchased by the COUNTY and placed at the participating library as part of any COUNTY networked system without prior written approval from the single administrative head or designee. Any physical attachment to or removal from a COUNTY networked system shall be performed by the COUNTY or a vendor authorized or recommended by the COUNTY.

G. Should the COUNTY cancel this Agreement for any reason other than the MUNICIPALITY's failure to comply with the terms of this Agreement, the COUNTY, at its own expense and at the request of the MUNICIPALITY, shall make provision for the continuation of the COUNTY's library automation network as installed at the MUNICIPALITY's participating library at the operational level existing at the time of the termination of the Agreement for a period not to exceed two (2) years. Should the MUNICIPALITY not request continuation of the COUNTY's networked systems, the COUNTY shall be responsible for all costs associated with

removal of the COUNTY's networked systems from the MUNICIPALITY's library, including obtaining a copy of the MUNICIPALITY's library patron and bibliographic databases from the library automation vendor. Upon separate mutual written agreement between the MUNICIPALITY and the COUNTY, the COUNTY may continue to operate and maintain networked systems for the MUNICIPALITY's participating library beyond the two (2) year period.

H. Should the MUNICIPALITY cancel this Agreement for any reason other than the COUNTY's failure to comply with the terms of this Agreement, the MUNICIPALITY shall be responsible for all costs associated with removal of the COUNTY's networked systems from the MUNICIPALITY's library. The MUNICIPALITY shall also be responsible for all costs associated with obtaining a copy of the MUNICIPALITY's library patron and bibliographic databases from the library automation vendor. The COUNTY shall be obligated, at the MUNICIPALITY's request, to continue operation and maintenance of the COUNTY's networked systems for a period of up to one (1) year and the MUNICIPALITY shall be obligated to pay associated operating and maintenance costs to the COUNTY. Upon mutual written agreement between the MUNICIPALITY and the COUNTY, the COUNTY may continue to operate and maintain networked systems for the MUNICIPALITY's participating library beyond the one (1) year period.

I. Should this Agreement terminate through expiration, the COUNTY, if requested by the MUNICIPALITY, shall make provision for the continuation of the COUNTY's library automation network as installed at the MUNICIPALITY's participating library at the operational level existing at the time of the expiration of the Agreement for a period not to exceed one (1) year during which the MUNICIPALITY will pay associated operating and maintenance costs for the one (1) year period. Should the MUNICIPALITY not request continuation of the COUNTY's networked systems, the MUNICIPALITY shall be responsible for all costs associated with removal of the COUNTY's networked systems from the MUNICIPALITY's library, including the costs of obtaining a copy of the MUNICIPALITY's library patron and bibliographic databases from the library automation vendor. In the event that negotiations are ongoing prior to the expiration of the Agreement, the MUNICIPALITY shall be exempt from obligated costs during a negotiation period not to exceed one hundred twenty (120) days after expiration.

16. REPORTING:

The MUNICIPALITY and its participating library shall submit, by deadlines established through an agreement, policy or procedure, all reports, documentation, and information required for inclusion in any reports, or documents required to maintain State Aid eligibility. The COUNTY shall file, by deadlines established in *State Aid to Libraries Guidelines*, all reports and documents required to maintain State Aid eligibility.

17. SYSTEM WIDE POLICIES:

A. The single administrative head, in consultation with the directors of the participating libraries, shall develop and recommend system wide policies that will provide consistency for library patrons and staff. The policies shall be developed in cooperation with the Library Advisory Board, the governing bodies of the participating libraries, and the Board of County Commissioners.

B. The Library Advisory Board shall recommend system wide library policies to the Board of County Commissioners upon a two thirds majority vote of its members. The MUNICIPALITY's representative shall represent the MUNICIPALITY's direction in recommendation of policies. In adopting policies, the Board of County Commissioners shall consider the recommendations of the Library Advisory Board but shall not be bound thereby. System wide policies shall be transmitted to all member library governing bodies for consideration and/or action at least thirty (30) days before consideration by the Board of County Commissioners.

C. The COUNTY and MUNICIPALITY shall abide by system wide policies to the extent they do not conflict with County and City Ordinances, policies or procedures.

18. RECIPROCAL BORROWING:

The COUNTY has previously existing agreements authorizing reciprocal borrowing with Seminole, Volusia, and Marion counties, and with Lake-Sumter State College. Additional reciprocal borrowing agreements may be entered into by the COUNTY on behalf of the Lake County Library System upon the written approval of the Board of County Commissioners and all participating library governing bodies.

19. ADDITIONAL RESPONSIBILITIES OF COUNTY AND MEMBER LIBRARY GOVERNING BODIES:

A. The COUNTY and the MUNICIPALITY shall abide by all State and Federal laws, and specifically those relating to the provision of library services.

B. The COUNTY shall refrain from using State Aid Operating grant funds, except in

the case of a severe funding shortage and only upon the consent of the COUNTY and all participating MUNICIPALITIES, as a means to replace COUNTY allocations for library services.

20. INDEMNIFICATION:

Subject to the provisions of Section 768.28, *Florida Statutes*, the MUNICIPALITY agrees to indemnify and hold the COUNTY harmless to the extent allowed for by Florida law, and the COUNTY agrees to indemnify and hold the MUNICIPALITY harmless to the extent allowed for by Florida law, from and against any actions at law to recover damages in tort for money damages for injury or loss of property, personal injury, or death arising out of this Agreement and caused by the negligent or wrongful act or omission of any employee under circumstances in which the MUNICIPALITY and the COUNTY, if a private person, would be liable to the claimant, in accordance with the general laws of the state of Florida.

This indemnification shall continue in full force and effect subsequent to and notwithstanding the expiration or termination of this Agreement to the extent allowed for by Florida law. Nothing contained herein shall be construed as an admission of liability on the part of either party.

The full execution of this Agreement shall obligate the COUNTY and the MUNICIPALITY to comply with this indemnification. This indemnification shall not act or be interpreted as a waiver of either party's sovereign immunity pursuant to Section 768.28, Florida Statutes.

21. INSURANCE:

The COUNTY shall provide, pay for, and maintain in force at all times during this Agreement, insurance to cover the COUNTY's buildings, contents, vehicles, networked systems, workers' compensation, general liability, and any other insurance required by law.

The MUNICIPALITY shall provide, pay for, and maintain in force at all times during this Agreement, insurance to cover the MUNICIPALITY's participating library including buildings, contents, equipment owned by the MUNICIPALITY, vehicles, workers' compensation, general liability, and any other insurance required by law.

22. MEDIATION/LEGAL FEES /JURY TRIAL WAIVER:

In the event that any dispute arises between the MUNICIPALITY and the COUNTY with respect to the rights or responsibilities of the MUNICIPALITY or the COUNTY under the Agreement, that dispute shall be mediated by a library professional chosen by the State Librarian

from the State Library consultant staff. The mediation shall not be binding, and if agreement cannot be reached, the aggrieved party(s) may pursue legal recourse as allowed by law.

Should litigation arise under this Interlocal Agreement, each party agrees to waive any right to trial by jury.

23. MODIFICATION:

No modification, amendment or alteration of the terms or conditions contained herein shall be effective unless contained in a written document executed by the parties hereto, with the same formality, and of equal dignity herewith.

24. NOTICES:

A. All notices, demands, or other writings required to be given or made or sent in this Agreement, or which may be given or made or sent, by either party to the other, shall be deemed to have been fully given or made or sent when in writing and addressed as follows:

COUNTY	MUNICIPALITY
County Manager Lake County Administration Building 315 West Main Street, Suite 308 P.O. Box 7800 Tavares, FL 32778-7800	City Manager 510 N. Baker Street Mount Dora, FL 32757

cc: Director of the Office of Library Services
P.O. Box 7800
Tavares, FL 32778-7800

B. All Notices required, or which may be given hereunder, shall be considered properly given if (1) personally delivered, (2) sent by certified United States Mail, return receipt requested, (3) sent by Federal Express or other equivalent overnight letter delivery company.

C. The effective date of such notices shall be the date personally delivered; or if sent by mail, the date of the postmark; or if sent by overnight letter delivery company, the date the notice was picked up by the overnight letter delivery company.

D. Parties may designate other parties or addresses to which notices shall be sent by notifying, in writing, the other party in a manner designated for the filing of notice hereunder.

25. ENTIRE AGREEMENT:

This Agreement embodies the entire agreement between the parties. It may not be modified

IN WITNESS WHEREOF, the parties hereto have made and executed this Agreement on the respective dates under each signature: COUNTY, through its Board of County Commissioners, signing by and through its Chair, and MUNICIPALITY, by its duly authorized representative.

COUNTY

ATTEST:

LAKE COUNTY, through its
BOARD OF COUNTY
COMMISSIONERS

Gary J. Cooney, Clerk of the
Board of County Commissioners of Lake
County, Florida

Leslie Campione, Chairman

This 10th day of September, 2019.

Approved as to form and legality:

Melanie Marsh
County Attorney

ATTEST:

Gwen Johns, City Clerk

MUNICIPALITY

Nick Girone, as Mayor
City of Mount Dora

This 18th day of July, 2019.

Approved as to form and legality:

Sherry Sutphen, City Attorney

ATTACHMENT A

CERTIFICATION OF LOCAL OPERATING EXPENDITURES
FISCAL YEAR 2017-2018

The Lake County Board of County Commissioners,
(name of library governing body)

governing body for the W. T. Bland Public Library,
(name of Lake County Library System Member Library)

hereby certifies that the following total funds from local sources were expended centrally during the fiscal year beginning October 1, 2017, and ending September 30, 2018, for the operation and maintenance of a library under the conditions outlined in Chapter 257, Florida Statutes, Lake County Library System's Long Range Plan and Annual Plan of Services and Budget, and the Interlocal Agreement Relating to Provision of Library Services.

We further certify that the amount listed below does not include any of the following:

- Funds received from the federal government
- Funds received from the state government
- Funds used for purchase or construction of a library building or library quarters

Such funds are not eligible to be used as local match for State Aid applications under Chapter 257, Florida Statutes, and guidelines for the State Aid to Libraries Grant program.

We further certify that the amount listed below:

(check one)

X does include funds received from the Lake County Board of County Commissioners.
____ does not include funds received from the Lake County Board of County Commissioners.

(check one)

____ has been audited by an external auditor.
____ has been reviewed by an independent auditor.
X has been compiled into financial statement format by an independent auditor.

Also, a copy of the report of the independent auditor:

(check one)

____ has been provided to the Lake County Board of County Commissioners.
X is enclosed.

A copy of the supporting general ledger with detail line item expenditures for library operations is required to be submitted to the Lake County Board of County Commissioners for all libraries.

Total local funds expended centrally by the library for the operation and maintenance of a library between October 1, 2017, and September 30, 2018.

$ 868,389

Signature, Chief Financial Officer

7/23/19
Date

Matt Dickey
Print Name

Finance Director
Official Title

This certification is to be completed and mailed by **August 1, 2019** to: Library Services Director, Lake County Library System, P.O. Box 7800, Tavares, FL 32778-7800.

FLORIDA DEPARTMENT OF STATE
DIVISION OF LIBRARY AND INFORMATION SERVICES
EXPENDITURE OR APPROPRIATION REPORT

Library Name: W. T. Bland Public Library

Expenditure Report - *October 1, 2017 - September 30, 2018*

EXPENDITURE/ APPROPRIATION CATEGORY	FUNDING OR REVENUE SOURCES:					TOTAL
	LOCAL	COUNTY	STATE	FEDERAL	OTHER	
10 Personnel Services	$598,858					$598,858
30 Operating Expenses	$162,688					$162,688
60 Capital Outlay (Non-Fixed)	$106,843					$106,843
Other						$0
Total for the operation & maintenance of the library	$868,389	$0	$0	$0	$0	$868,389

60 Capital Outlay (Fixed, including purchase or construction of a library building or quarters)						$0

CITY OF MOUNT DORA, FLORIDA
SCHEDULE OF REVENUES, EXPENDITURES, AND CHANGES IN FUND BALANCE
BUDGET AND ACTUAL
MAJOR FUND - GENERAL FUND
FOR THE YEAR ENDED SEPTEMBER 30, 2018
(Concluded)

	Original Budget	Final Budget	Actual	Variance
Expenditures *(Concluded)*				
Transportation				
Roads and Streets:				
Personal Services	$ 537,361	$ 500,146	$ 513,471	$ (13,325)
Operating Expenses	527,133	1,004,863	1,005,892	(1,029)
Capital Outlay	-	310	310	-
Total Transportation	1,064,494	1,505,319	1,519,673	(14,354)
Culture and Recreation				
Libraries:				
Personal Services	568,050	588,827	598,858	(10,031)
Operating Expenses	152,604	164,760	162,688	2,072
Capital Outlay	35,000	106,851	106,843	8
Total Libraries	755,654	860,438	868,389	(7,951)
Parks and Recreation:				
Personal Services	677,441	751,852	758,054	(6,202)
Operating Expenses	637,959	598,064	593,623	4,441
Capital Outlay	1,200	47,319	47,318	1
Total Parks and Recreation	1,316,600	1,397,235	1,398,995	(1,760)
Total Culture and Recreation	2,072,254	2,257,673	2,267,384	(9,711)
(Total Expenditures)	(17,554,913)	(17,554,817)	(17,299,861)	254,956
(Deficiency) of Revenue (Under) Expenditures	(4,987,853)	(2,934,160)	(2,452,069)	482,091
Other Financing Sources				
Transfers in:				
Public Services Tax	1,919,000	761,938	761,938	-
Electric	1,184,350	1,184,350	1,309,300	124,950
Water and Wastewater	1,768,200	1,768,200	1,385,600	(382,600)
Stormwater	141,150	141,150	144,350	3,200
Transfers (out):				
Cemetery Fund	(117,000)	(117,000)	(57,000)	60,000
Special Event Fund	(376,700)	(376,700)	(273,793)	102,907
CRA Fund	(544,475)	(544,475)	(525,066)	19,409
NECRA Fund	(220,812)	(220,812)	(212,415)	8,397
Self-Insurance Fund	-	-	(20,461)	(20,461)
Total Other Financing Sources (Uses)	3,753,713	2,596,651	2,512,453	(84,198)
Net Change in Fund Balances	(1,234,140)	(337,509)	60,384	397,893
Fund Balance, Beginning of Year	1,234,140	337,605	3,659,165	3,321,560
Fund Balance, End of Year	$ -	$ 96	$ 3,719,549	$ 3,719,453

REVENUE AND EXPENDITURE REPORT FOR MOUNT DORA

PERIOD ENDING 09/30/2018

ACCOUNT DESCRIPTION	2017-18 ORIGINAL BUDGET	2017-18 AMENDED BUDGET	PERIOD BALANCE DR (CR)
Expenditures			
Function: Unclassified			
Dept 5710 - LIBRARY			
Account Type: Expenditure			
PERSONAL SERVICES			
512.00-00 SALARIES & WAGES	428,339.00	467,524.00	467,523.30
514.00-00 OVERTIME WAGES	2,980.00	7,191.00	7,190.67
521.00-00 FICA TAXES	32,996.00	35,524.00	35,523.65
522.00-00 RETIREMENT EXP	51,252.00	26,651.00	36,683.99
523.00-00 HEALTH & LIFE INSURANCE	52,483.00	51,937.00	51,936.16
524.00-00 W/C INSURANCE EXP	661.00	680.00	881.86
PERSONAL SERVICES	568,711.00	589,507.00	599,739.63
OPERATING EXPENDITURES			
534.00-00 OTHER CONTRACTUAL SERVICE	3,800.00	557.00	556.25
534.02-00 MERCHANT CARD	700.00	339.00	338.24
540.00-00 TRAVEL & PER DIEM	2,000.00	205.00	204.86
541.00-00 COMMUNICATION SERVICES	30,800.00	33,096.00	33,095.18
542.00-00 MAIL & FREIGHT	1,200.00	146.00	145.17
543.00-00 UTILITY SERVICES	20,000.00	23,312.00	23,311.37
544.00-00 RENT	7,850.00	7,108.00	7,107.13
545.00-00 INSURANCE	28,193.00	28,193.00	25,929.44
546.00-00 REPAIR & MAINT SERVICES	18,100.00	8,586.00	8,585.01
547.00-00 PRINTING & BINDING	1,000.00	130.00	129.55
549.00-00 OTHER CURRENT CHGS & OBLG	800.00	1,842.00	1,841.15
551.00-00 OFFICE SUPPLIES	4,500.00	5,896.00	5,895.56
552.00-00 OPERATING SUPPLIES	15,200.00	21,079.00	21,078.25
552.05-00 TECHNICAL SUPPLIES	15,800.00	19,011.00	19,010.86
552.70-00 Adult Programs	0.00	436.00	435.71
552.71-00 JUVENILE PROGRAMS	0.00	489.00	488.32
552.72-00 ADULT PROGRAM SUPPLIES	0.00	1,914.00	1,913.51
552.73-00 JUVENILE PROGRAM SUPPLIES	0.00	1,903.00	1,902.92
552.74-00	0.00	60.00	59.44
554.00-00 DUES AND MEMBERSHIPS	1,200.00	8,372.00	8,371.84
555.00-00 TRAINING	800.00	1,406.00	1,406.00
OPERATING EXPENDITURES	151,943.00	164,080.00	161,805.76
CAPITAL OUTLAY			
566.00-00 LIBRARY COLLECTION	35,000.00	106,851.00	106,842.96
CAPITAL OUTLAY	35,000.00	106,851.00	106,842.96
Total Expenditure:	755,654.00	860,438.00	868,388.35
Total Dept 5710 - LIBRARY	755,654.00	860,438.00	868,388.35
Total - Function Unclassified	755,654.00	860,438.00	868,388.35
TOTAL EXPENDITURES	755,654.00	860,438.00	868,388.35
TOTAL REVENUES - FUND 001	0.00	0.00	0.00
TOTAL EXPENDITURES - FUND 001	755,654.00	860,438.00	868,388.35
NET OF REVENUES & EXPENDITURES	(755,654.00)	(860,438.00)	(868,388.35)

AMENDMENT TO AGREEMENT
RELATING TO
PROVISION OF LIBRARY SERVICES

This is an Amendment to the Interlocal Agreement between Lake County, Florida, a political subdivision of the State of Florida, hereinafter referred to as "COUNTY", by and through its Board of County Commissioners, and the City of Mount Dora, a municipal corporation pursuant to the Laws of Florida, hereinafter referred to as 'MUNICIPALITY" or "CITY", by and through its City Commission.

WITNESSETH:

WHEREAS, on September 10, 2019, the COUNTY entered into a Interlocal Agreement with the MUNICIPALITY for the provision of public library services (the Agreement); and

WHEREAS, the parties now want to extend the Agreement for an additional 12-month period expiring on September 30, 2023; and

WHEREAS, executing this Amendment is in the best interests of the parties and the residents of Lake County.

NOW, THEREFORE, the parties agree as follows:

1. **Recitals.** The above recitals are true and correct and incorporated in this Agreement.

2. **Amendment.** The Agreement is hereby amended as follows:

A. Section 3, *Term,* is hereby amended to allow for an additional 12-month period and terminating on September 30, 2023.

B. Section 13 (E), *Appropriation of County Funds for Municipality,* is hereby amended to add Year Four: The COUNTY shall allocate a base amount of twenty thousand dollars ($20,000) to assist with funding of programs and services at its participating library.

3. **Effect of Amendment.** All other provisions of the Agreement will remain in full force and effect unless otherwise formally amended by the parties. To the extent this Amendment conflicts with the Agreement, this Amendment will govern.

{Remainder of page intentionally left blank.}

IN WITNESS WHEREOF, the parties have signed this amendment through their authorized representatives on the dates under each signature.

COUNTY

LAKE COUNTY, FLORIDA, through its
BOARD OF COUNTY COMMISSIONERS

ATTEST:

_____
Gary J. Cooney, Clerk
Board of County Commissioners
of Lake County, Florida

_____
Sean M. Parks, Chairman

This _____ day of _____, 2022.

Approved as to form and legality:

_____
Melanie Marsh
County Attorney

MUNCIPALITY

ATTEST:

CITY OF MOUNT DORA

_____
Jessica Burnham, City Clerk

_____
Crissy Stile, Mayor

This _____ day of _____, 2022.

Approved as to form and legality:

_____
Sherry G. Sutphen, City Attorney

510 N. Baker St.
Mount Dora, FL 32757
352-735-7126

DATE: **July 5, 2022**

TO: **Honorable Mayor and City Council Members**

FROM: **Patrick C. Comiskey, City Manager** Patrick C. Comiskey

SUBJECT: Request Approval of Resolution No. 2022-43, Duke Energy Foundation Economic Development Grant Application

---

Introduction:
This is a request for City Council to approve Resolution No. 2022-43, authorizing the City to submit an application for the 2022 Duke Energy Foundation Economic Development Grant.

Discussion:
Through the Duke Energy Foundation, the economic development team provides the opportunity for local and regional economic development organizations to apply for grants up to $25,000 to fund strategic and marketing initiatives resulting in new jobs and investment in the communities they serve.

Because the Wolf Branch Innovation District falls within Duke Energy's electric utility service territory, the City would like to submit a grant application under this program. The City will benefit from this funding by the creation of promotional materials that will better showcase this area for development. The deadline to apply for this grant is July 8, 2022.

Budget Impact:
The maximum amount awarded is $25,000.There is no requirement for the City to provide a match, so there would be no impact to the budget as a result of this grant application.

Strategic Impact:
GOAL 1 - Economic Development
Objective 1.1. Develop Wolf Branch Innovation District
Objective 1.3. Attract new commercial businesses/residential development

GOAL 3: Fiscal Resources / Human Resources
Objective 3.1. Identify and seek funding sources

Recommendation:

City Council approve Resolution No. 2022-43.

Attachment(s):

1. Attachment 1 - 2022 Duke Energy Foundation Economic Development Grant Announcement (ADA)
2. Resolution 2022-43.Duke Energy Foundation Grant Application.SGS

Prepared by:	Misty Sommer, Economic Development Manager	
Reviewed by:	Aneta Barton, Budget Officer	Approved - 6/27/2022
	Sherry Sutphen, City Attorney	Approved - 6/29/2022
	Jeanann Hand, Deputy City Clerk	Approved - 6/29/2022
	Jessica Burnham, City Clerk	Approved - 6/29/2022
	Patrick Comiskey, City Manager	Final Approval - 6/29/2022

Foundation Economic Development Grants

Duke Energy Foundation Economic Development Grant Program

Duke Energy is committed to strengthening our partnerships to grow our communities. Through the Duke Energy Foundation, the economic development team provides the opportunity for local and regional economic development organizations to apply for grants up to $25,000 to fund strategic and marketing initiatives resulting in new jobs and investment in the communities we serve.

A limited number of proposals will be selected and sent the formal grant application. Funding is contingent upon available funds and programs may be funded partially. Examples may include, but are not limited to:

- Marketing campaigns and materials
- Website development and updates
- FAM tours and special events to promote sites/communities
- Sales trips
- Conference/tradeshow registrations
- Sales trip coordination fees
- Other opportunities to increase awareness of a community or region's economic development strategies and product availability

Please note: *Funding will not include travel, lodging, food/beverage and entertainment expenses.*

Recipient Obligations and Program Timeline

Applicants must be a **government entity** or **501c3** that represents communities served by Duke Energy. If selected, the economic development organization must:

- Have already completed and reported on the previous year's grant funding (if applicable).
- Be willing to coordinate efforts and partner with Duke Energy where both organizations are involved in the program or event being funded.
- Be willing to work with Duke Energy to promote the grant.

To be considered, this proposal form must be returned to Peveeta Samuel at Peveeta.Samuel@duke-energy.com by **July 8, 2022.** Applicants that are selected will be sent the formal Foundation application link in August 2022**.**

Foundation Economic Development Grants

Duke Energy Foundation Economic Development Grant Program 2022 Request Form

- **Name of Organization:**
- **Contact Name:**
- **Contact Phone Number:**
- **Contact Email:**
- **Is your organization:** Select one ☐ 501c3 ☐ Government entity
- **Program Title:**
- **Total Grant Program Budget Amount:**
- **Requested Funding Amount:**
- **Grant Program Summary:**
  Please provide a succinct summary and overview of the program. (500 characters)
- **Grant Program Detail:**
  Please describe the program you're requesting funds for in detail and how it aligns with community needs. (2000 characters)
- **Grant Program Start Date:** Please select date
- **Grant Program End Date:** Please select date
- **Fund Use:** Please describe how the funds will be used.
- **Impact:** Please describe the impact the grant will have in your community.
- **Outcomes:** Please describe the outcomes you will achieve with this program.
- **Please indicate how Duke Energy will be recognized as a funder of this grant program:** Select all that apply.

  ☐ Distribute Duke Energy news release
  ☐ Distribute organizational press release
  ☐ Tag Duke Energy in social media post about the grant program
  ☐ Host media event (check presentation, ribbon cutting, student showcase etc.)
  ☐ Distribute information via an organizational publication
  ☐ Duke Energy logo used on grant program materials
  ☐ Event recognition (recognition from podium, signage, speaking opportunities, etc.)
  ☐ Programmatic naming rights
  ☐ Other: Please describe.

- **Which metrics you will use to measure this grant program's success?** Please describe how will you determine success?

RESOLUTION NO. 2022-43

A RESOLUTION OF THE CITY OF MOUNT DORA, FLORIDA, PERTAINING TO THE DUKE ENERGY FOUNDATION ECONOMIC DEVELOPMENT GRANT APPLICATION; PROVIDING FOR LEGISLATIVE FINDINGS AND INTENT; PROVIDING AUTHORIZATION TO SUBMIT GRANT APPLICATION; PROVIDING FOR THE IMPLEMENTATION OF ADMINISTRATIVE ACTIONS; PROVIDING A SAVINGS CLAUSE; PROVIDING FOR SCRIVENER'S ERRORS; PROVIDING FOR CONFLICTS; PROVIDING FOR SEVERABILITY; AND PROVIDING AN EFFECTIVE DATE.

WHEREAS, the City of Mount Dora's Wolf Branch Innovation District falls within the Duke Energy electric utility service territory; and

WHEREAS, the Duke Energy Foundation offers an Economic Development Grant to Economic Development organizations, in the communities served by Duke Energy, which provides funding up to $25,000 for strategic and marketing initiatives related to new jobs and investments in the community; and

WHEREAS, the City is interested in seeking funding to create promotional materials for showcasing the Wolf Branch Innovation District for development; and

WHEREAS, the City has determined that it is in the best interest of its citizens of Mount Dora to submit a grant application for the Duke Energy Foundation Economic Development Grant.

NOW, THEREFORE, BE IT RESOLVED BY THE CITY OF MOUNT DORA, FLORIDA, AS FOLLOWS:

SECTION 1. Legislative Findings and Intent. The City of Mount Dora has complied with all requirements and procedures of Florida law in processing this Resolution. The above recitals are hereby adopted.

SECTION 2. Authorization to Submit Grant Application.

A. The City Manager is hereby authorized to prepare and submit a grant application, and proposal for the Duke Energy Foundation Economic Development Grant, related to the desired funding to assist with the creation of promotional materials for showcasing the Wolf Branch Innovation District for development.

B. The Mayor is hereby authorized to execute the application or associated documentation necessary or required to apply for the grant as set forth herein.

SECTION 3. Implementing Administrative Actions. The City Manager is hereby authorized and directed to take such action as may be deemed necessary and appropriate in order to implement the provisions of this Resolution. The City Manager may, as deemed appropriate, necessary and convenient, delegate the powers of implementation as herein set forth to such City employees as deemed effectual and prudent.

SECTION 4. Savings Clause. All prior actions of the City of Mount Dora pertaining to the Duke Energy Foundation Economic Development Grant application, as well as any and all matters relating thereto, are hereby ratified and affirmed consistent with the provisions of this Resolution.

SECTION 5. Scrivener's Errors. Typographical errors and other matters of a similar nature that do not affect the intent of this Resolution, as determined by the City Clerk and City Attorney, may be corrected.

SECTION 6. Conflicts. All Resolutions or parts of Resolutions in conflict with any of the provisions of this Resolution are hereby repealed.

SECTION 7. Severability. If any Section or portion of a Section of this Resolution proves to be invalid, unlawful, or unconstitutional, it shall not be held to invalidate or impair the validity, force, or effect of any other Section or part of this Resolution.

SECTION 8. Effective Date. This Resolution shall become effective immediately upon its passage and adoption.

PASSED AND ADOPTED this ____ day of July, 2022.

_____
CRISSY STILE
MAYOR of the City of Mount Dora, Florida

ATTEST:

_____
Jessica Burnham
City Clerk

For the use and reliance of City of Mount Dora only. Approved as to form and legal sufficiency.

_____
Sherry G. Sutphen, City Attorney

510 N. Baker St.
Mount Dora, FL 32757
352-735-7126

DATE: **July 5, 2022**

TO: **Honorable Mayor and City Council Members**

FROM: **Patrick C. Comiskey, City Manager** Patrick C. Comiskey

SUBJECT: Request Approval of Resolution No. 2022-44, Authorizing a Credit to the Accounts of Residential Reclaimed Water Customers for Certain Sewer Fees

---

Introduction:
This is a request for City Council to authorize a credit to the accounts of residential reclaimed water customers for certain sewer fees.

Discussion:
The City of Mount Dora utilizes an augmentation well to supplement its reclaimed water supply for customers on the reclaimed water system. In April 2022, the City's augmentation well experienced mechanical issues and was out of service for diagnostics and repair through June 2022, thereby causing a shortage of reclaimed water. Certain reclaimed water customers utilized potable water for landscape irrigation during the reclaimed water shortage and subsequently incurred excessive sewer charges for water that was not returned through the City's sewer system. Accordingly, the City desires to credit the accounts of residential reclaimed water customers for those sewer fees charged over and above 15,000 gallons per month for the April, May and June 2022 billing cycles.

Budget Impact:
The cumulative credit amount for all identified residential reclaimed water customers is $3,081.41.

Strategic Impact:
N/A

Recommendation:
City Council authorize a credit to the accounts of residential reclaimed water customers for certain sewer fees.

Attachment(s):

1. Resolution 2022-44 Sewer Credit for Reclaim Water Users.SGS

Prepared by:	Merry Lovern , Executive Assistant	
Reviewed by:	Sherry Sutphen, City Attorney	Approved - 6/29/2022
	Jessica Burnham, City Clerk	Approved - 6/29/2022
	Jeanann Hand, Deputy City Clerk	Approved - 6/29/2022
	Patrick Comiskey, City Manager	Final Approval - 6/29/2022

RESOLUTION NO. 2022-44

A RESOLUTION OF THE CITY OF MOUNT DORA, FLORIDA, PERTAINING TO THE 2021-22 FEE SCHEDULE; PROVIDING FOR LEGISLATIVE FINDINGS AND INTENT; PROVIDING FOR THE CREDIT OF CERTAIN FEES; PROVIDING FOR THE IMPLEMENTATION OF ADMINISTRATIVE ACTIONS; PROVIDING A SAVINGS CLAUSE; PROVIDING FOR SCRIVENER'S ERRORS; PROVIDING FOR CONFLICTS; PROVIDING FOR SEVERABILITY; AND PROVIDING AN EFFECTIVE DATE.

WHEREAS, the City adopted its current Master Fee Schedule ("2021-22 Fee Schedule") on January 18, 2022 under Resolution No. 2022-03; and

WHEREAS, the 2021-22 Fee Schedule contains certain residential sewer fees related to operations performed by the Water Utilities Department; and

WHEREAS, the City utilizes an augmentation well to supplement its reclaimed water supply for customers on the reclaimed water system; and

WHEREAS, in April 2022, the City's augmentation well experienced mechanical issues and was out of service for diagnostics and repair through June 1, 2022, thereby causing a shortage of reclaimed water; and

WHEREAS, certain reclaimed water customers utilized potable water for landscape irrigation during the reclaimed water shortage and subsequently incurred excessive charges for water that was not returned through the City's sewer system; and

WHEREAS, the City desires to credit the accounts of residential reclaimed water customers for those sewer fees charged over and above 15,000 gallons per month for the April, May and June, 2022 billing cycles.

NOW, THEREFORE, BE IT RESOLVED BY THE CITY OF MOUNT DORA, FLORIDA, AS FOLLOWS:

SECTION 1. Legislative Findings and Intent. The City of Mount Dora has complied with all requirements and procedures of Florida law in processing this Resolution. The above findings are hereby adopted.

SECTION 2. Credit of Certain Fees. The City hereby authorizes a credit to the accounts of residential reclaimed water customers for sewer usage fees over and above 15,000 gallons per month for the April, May and June 2022 billing cycles.

SECTION 3. Implementing Administrative Actions. The City Manager is hereby authorized and directed to take such actions as may be deemed necessary and appropriate in order to implement the provisions of this Resolution. The City Manager may, as deemed appropriate, necessary and convenient, delegate the powers of implementation as herein set forth to such City employees as deemed effectual and prudent.

SECTION 4. Savings Clause. All prior actions of the City of Mount Dora pertaining to the 2021-22 Fee Schedule and the credit of certain fees, as well as any and all matters relating thereto, are hereby ratified and affirmed consistent with the provisions of this Resolution.

SECTION 5. Scrivener's Errors. Typographical errors and other matters of a similar nature that do not affect the intent of this Resolution, as determined by the City Clerk and City Attorney, may be corrected.

SECTION 6. Conflicts. All Resolutions or parts of Resolutions in conflict with any of the provisions of this Resolution are hereby repealed.

SECTION 7. Severability. If any Section or portion of a Section of this Resolution proves to be invalid, unlawful, or unconstitutional, it shall not be held to invalidate or impair the validity, force, or effect of any other Section or part of this Resolution.

SECTION 8. Effective Date. This Resolution shall become effective immediately upon its passage and adoption.

PASSED AND ADOPTED this 25th day of July, 2022.

_____
CRISSY STILE, MAYOR
City of Mount Dora, Florida

ATTEST:

_____
Jessica Burnham
City Clerk

For the use and reliance of City of Mount Dora only.
Approved as to form and legal sufficiency.

_____
Sherry G. Sutphen, City Attorney

510 N. Baker St.
Mount Dora, FL 32757
352-735-7126

DATE: **July 5, 2022**

TO: **Honorable Mayor and City Council Members**

FROM: **Patrick C. Comiskey, City Manager** Patrick C. Comiskey

SUBJECT: Request Approval of Meeting Minutes

- June 7, 2022 City Council Regular Session Minutes
- June 7, 2022 CRA Governing Board Minutes
- June 7, 2022 Northeast CRA Governing Board Minutes
- June 21, 2022 City Council Regular Session Minutes
- June 21, 2022 CRA Governing Board Minutes

Introduction:
This is a request for City Council to approve meeting minutes.

Discussion:
The City Clerk prepares minutes and presents them to City Council as an opportunity to make suggestions or corrections prior to final approval.

Budget Impact:
N/A

Strategic Impact:
N/A

Recommendation:
City Council to approve Meeting Minutes.

Attachment(s):
1. June 7, 2022 Regular City Council Minutes_DRAFT
2. June 7, 2022 CRA Governing Board Minutes_DRAFT

3. June 7, 2022 Northeast CRA Governing Board Minutes_DRAFT
4. June 21, 2022 Regular City Council Minutes_DRAFT
5. June 21, 2022 CRA Governing Board Minutes_DRAFT

Prepared by: Jeanann Hand, Deputy City Clerk
Reviewed by: Jessica Burnham, City Clerk Final Approval - 6/28/2022

CITY OF
MOUNT DORA, FLORIDA
CITY COUNCIL
MINUTES

June 7, 2022 City Hall
510 N. Baker St.
Mount Dora, FL 32757

CALL TO ORDER

Having been duly advertised as required by law, Mayor Crissy Stile called the Regular Session of City Council to order at 6:00 PM in the Mount Dora Council Chambers.

MOMENT OF SILENCE & PLEDGE OF ALLEGIANCE

Mayor Stile led a Moment of Silence and Pledge of Allegiance to the Flag.

ROLL CALL

Members Present	Also Present
Crissy Stile, Mayor	Patrick C. Comiskey, City Manager
Marc Crail, Vice-Mayor	Sherry G. Sutphen, City Attorney
John Cataldo, District 1	Jessica Burnham, City Clerk
Cal Rolfson, District 2	
Austin Guenther, District 3	
Nate Walker, District 5	
Doug Bryant, At-Large	

PRESENTATIONS

1. Lake-Sumter Metropolitan Planning Organization Unified Planning Work Program
   Michael Woods, Executive Director Lake-Sumter MPO, provided the council with an update on the Infrastructure Investment and Jobs Act, Transportation improvement program and the 2022 list of Priority Projects.

2. Juneteenth Proclamation
   Mayor Stile read the Juneteenth Proclamation into the record.

3. LGBTQIA+ Pride Month Proclamation
   Mayor Stile read the LGBTQIA+ Proclamation into the record.

PUBLIC COMMENTS

Mayor Stile opened public comment.

Steve Savage, no permanent address, spoke on being denied handicapped parking during an event unless payment was made.

DRAFT

Joe Lewis, 148 Charles Avenue, spoke about waterfront development and emphasized its importance for the City's future.

Rozann Abato, 541 East First Avenue, spoke on the recent resignation of Brett Meade.

Mike Garcia, 1912 Hilltop Drive, mentioned his views on the reasons why Brett Meade should come back.

Sheila Ramos, 825 Grand Avenue, spoke about her views of Brett Meade and how his resignation was a loss for the community.

Bobby Rowe, 1155 North Clayton Street, mentioned that progress has been made with relationships between police and residents within the Northeast Community.

Lillie Taylor, 704 Pine Avenue, spoke about her views in regards to Brett Meade and stated how he has helped the Northeast Community.

Michael J. Sachs, 6279 Southeast Eighth Lane, Ocala, Florida 34472 spoke on the importance of consistency and leadership in police departments.

John Prentice, 631 High Point Drive, provided his views in regards to Brett Meade's character and his presence in the community.

Brian Young, 1024 North Rossiter Street, spoke about Brett Meade and how he made running events much easier.

Lorrine Bowman, 760 Fearon Avenue, stated she highly respects Brett Meade.

Deina Brignoni, 1912 Hilltop Drive, spoke about the support that Brett Meade provided to the Police Department.

City Manager Patrick Comiskey noted that former Chief Meade left his position entirely of his own accord. Former Chief Meade was not asked to resign, was not asked to leave his position, and was not asked to not work a two-week notice. City Manager Comiskey invited community members to meet with him if they had questions about how the City is governed.

Mayor Stile closed public comment.

APPROVAL OF AGENDA

MOTION BY COUNCILMEMBER ROLFSON TO APPROVE THE AGENDA; COUNCILMEMBER GUENTHER SECONDED THE MOTION. MOTION WAS APPROVED BY A UNANIMOUS VOICE VOTE.

DRAFT

CONSENT AGENDA

1. Request Approval of Amendment 1 to the Agreement Between the City of Mount Dora and The Davey Tree Expert Company Related to Tree Trimming Services of Electrical Lines

2. Request Approval of the Piggyback Contract for On-call Building Inspection Services between the City of Mount Dora and Joe Payne, Inc.

3. Request Approval of Meeting Minutes

   - May 17, 2022 City Council Regular Session Minutes
   - May 17, 2022 CRA Governing Board Minutes
   - May 17, 2022 Northeast CRA Governing Board Minutes

MOTION BY VICE MAYOR CRAIL TO APPROVE THE CONSENT AGENDA; COUNCILMEMBER WALKER SECONDED THE MOTION. MOTION WAS APPROVED BY A UNANIMOUS VOICE VOTE.

DISCUSSION ITEMS

1. Correspondence with City Attorney

   Discussion ensued on the process for committee members and staff members reaching out to the city attorney.

ACTION ITEMS

1. Request Approval of Resolution No. 2022-34, Requesting City support for modifications to the Lake-Sumter MPO's 2022 List of Priority Projects (LOPP)

   City Attorney Sutphen read Resolution No. 2022-34, Requesting City Support for Modifications to the Lake-Sumter MPO's 2022 List of Priority Projects (LOPP), by title only.

RESOLUTION NO. 2022-34

A RESOLUTION OF THE CITY OF MOUNT DORA, FLORIDA, PERTAINING TO THE LAKE-SUMTER METROPOLITAN PLANNING ORGANIZATION LIST OF PRIORITY PROJECTS; PROVIDING FOR LEGISLATIVE FINDINGS AND

DRAFT

PROVIDING FOR PROJECT SUPPORT; PROVIDING FOR THE IMPLEMENTATION OF ADMINISTRATIVE ACTIONS; PROVIDING A SAVINGS CLAUSE; PROVIDING FOR SCRIVENER'S ERRORS, PROVIDING FOR CONFLICTS; PROVIDING FOR SEVERABILITY; AND PROVIDING AN EFFECTIVE DATE.

Councilmember Rolfson spoke about the presentation that was given earlier in the meeting and mentioned the priority projects. He stated that we should reach out to the county and the city of Eustis for their support as ell.

Council provided their views on the Resolution.

M OTION BY COUNCILMEMBER ROLFSON TO APROVE RESOLUTION 2022-34, REQUESTING CITY SUPPORT FOR MODIFICATIONS TO THE LAKE-SUMTER MPO'S LIST OF PRIORITY PROJECT; COUNCILMEMBER CATALDO SECONDED THE MOTION. MOTION WAS APPROVED BY A ROLL CALL VOTE.

YES Councilmember Walker
Coucilmember Rolfson
Councilmember Cataldo
Councilmember Guenther
Councilmember Bryant
Vice-mayor Crail
Mayor Stile

NO None

PUBLIC HEARINGS - RESOLUTIONS/ORDINANCES

1. **Request Approval of Resolution No. 2022-19**, Preliminary Plat for Villages of Loch Leven Parcel 1

City Attorney Sutphen read Resolution No. 2022-19, Preliminary Plat for Villages of Loch Leven Parcel 1 by name only.

RESOLUTION NO. 2022-19

A RESOLUTION OF THE CITY OF MOUNT DORA, FLORIDA RELATED TO THE PRELIMINARY PLAT ENTITLED "VILLAGES OF LOCH LEVEN PARCEL 1"; PROVIDING FOR LEGISLATIVE FINDINGS AND INTENT;

DRAFT

PROVIDING FOR PRELIMINARY PLAT APPROVAL WITH CONDITIONS; PROVIDING FOR THE IMPLEMENTATION OF ADMINISTRATIVE ACTIONS; PROVIDING A SAVINGS CLAUSE; PROVIDING FOR SCRIVENER'S ERRORS; PROVIDING FOR CONFLICTS; PROVIDING FOR SEVERABILITY; AND PROVIDING AN EFFECTIVE DATE.

Vince Sanderfeld, Planning and Zoning Director, provided the council with an overview of the agenda item. Discussion ensued about the lots, trees, and the widening of State Road 44.

A representative from engineering firm Poulos and Bennett , LLC spoke on the 40-foot minimum setback that will exist after the widening of 44. Discussion took place regarding the park land that would be donated to the city.

Mayor Stile opened public comment.

No one spoke.

Mayor Stile closed public comment.

MOTION BY COUNCILMEMBER ROLFSON TO APPROVE RESOLUTION NO. 2022-19, PRELIMINARY PLAT FOR VILLAGES OF LOCH LEVEN; COUNCILMEMBER GUENTHER SECONDED THE MOTION. MOTION WAS APPROVED BY A ROLL CALL VOTE.

YES Councilmember Rolfson
Councilmember Guenther
Councilmember Cataldo
Councilmember Walker
Councilmember Bryant
Vice-mayor Crail
Mayor Stile

NO None

Mayor Stile called the meeting to recess at 7:40 PM.

Mayor Stile called the meeting back to order at 7:50 PM.

DRAFT

2. **Final Reading of Ordinance No. 2022-08**, Pertaining to Charter Amendment for Building Height Limitation

City Attorney Sutphen read Ordinance No. 2022-08, Pertaining to Charter Amendment for Building Height Limitation by title only.

ORDINANCE NO. 2022-08

AN ORDINANCE OF THE CITY OF MOUNT DORA, FLORIDA PERTAINING TO A CHARTER AMENDMENT FOR THE 2022 BALLOT; PROVIDING FOR LEGISLATIVE FINDINGS AND INTENT; PROVIDING FOR THE IMPLEMENTATION OF ADMISTRATIVE ACTIONS; PROVIDING PROPOSED CHARTER AMENDMENT WITH TITLE AND BALLOT QUESTION; PROVIDING FOR SCRIVENER'S ERRORS; PROVIDING A SA VINGS CLAUSE; PROVIDING FOR CONFLICTS; PROVIDING FOR SEVERABILITY; AND PROVIDING AN EFFECTIVE DATE AND CODIFICATION.

Councilmember Rolfson stated for the record that he misspoke at the last meeting.

City Attorney Sutphen stated there had been no change from the first reading. She also mentioned an email that the council received. Ms. Sutphen referred to the multiple readings of the Ordinance and opportunities that had been available for members of the public to speak about the matter.

Mayor Stile opened public comment.

Joe Lewis, 148 Charles Avenue, stated he is opposed to the issue being placed in the City charter and provided the council with his reasons.

Mike Masterson, 7887 Crosswinds Way, stated his support for this issue appearing on the ballot.

Michell Middleton, 112 East Fifth Avenue, stated the current Ordinance has been in effect for twenty years and not one time has a variance been requested.

Lynn Tacher, 8031 St. James Way, stated the City is seeing an increasing number of buildings coming in and getting approved.

Mayor Stile closed public comment.

Discussion ensued on possibility of Bert Harris and other legal claims, petitions, due process and variance capability. The Ordinance demonstrates the City is following due process.

MOTION BY COUNCILMEMBER BRYANT TO APPROVE THE FINAL READING OF ORDINANCE NO. 2022-08, PERTAINING TO CHARTER

DRAFT

AMENDMENT FOR BUILDING HEIGHT LIMITATION; COUNCILMEMBER CATALDO SECONDED THE MOTION. MOTION APPROVED BY A 5-2 ROLL CALL VOTE.

YES Councilmember Bryant
Councilmember Cataldo
Councilmember Walker
Vice-mayor Crail
Mayor Stile

NO Councilmember Rolfson
Councilmember Guenther

3. **Request Approval of First Reading of Ordinance No. 2022-39**, Annexation for Lake County Water Authority (153.79 Acres)

Ms. Sutphen read Ordinance No. 2022-39, Annexation for Lake County Water Authority (153.79 Acres) by title only.

ORDINANCE NO: 2022-39

AN ORDINANCE OF THE CITY OF MOUNT DORA, FLORIDA, PERTAINING TO THE VOLUNTARY ANNEXATION OF PROPERTY GENERALLY LOCATED SOUTH OF SR 46, TERMINUS OF ROBIE AVENUE, AND ON THE WEST SIDE OF ROUND LAKE ROAD; PROVIDING FOR LEGISLATIVE FINDINGS AND INTENT; PROVIDING FOR VOLUNTARY ANNEXATION; PROVIDING FOR EFFECT OF ANNEXATION; PROVIDING AN AMENDMENT TO CHAPTER 2, CODE OF ORDINANCES; PROVIDING FOR FILING REQUIREMENTS; PROVIDING FOR IMPLEMENTATION OF ADMINISTRATIVE ACTIONS; PROVIDING A SAVINGS CLAUSE; PROVIDING FOR LIMITED CODIFICATION AND SCRIVENER'S ERRORS; PROVIDING FOR CONFLICTS; PROVIDING FOR SEVERABILITY; AND PROVIDING AN EFFECTIVE DATE.

Mr. Sandersfeld spoke on the agenda item and provided the council with an overview of its subject matter.

Councilmember Bryant spoke about he and Councilmember Crail being present at the Lake County Water Authority meeting when the annexation and was approved 6-1, and the benefits of the annexation.

Councilmember Walker and Mayor Stile disclosed individual relevant discussions with Commission Campione.

DRAFT

Mayor Stile opened public comment.

Christine King-Harris, 402 Jackson Avenue, spoke about her views on the item.

Mayor Stile closed public comment.

MOTION BY VICE-MAYOR CRAIL TO APPROVE THE FIRST READING OF ORDINANCE NO. 2022-39, ANNEXATION FOR LAKE COUNTY WATER AUTHORITY (153.79 ACRES); COUNCILMEMBER CATALDO SECONDED THE MOTION. MOTION APPROVED BY A ROLL CALL VOTE.

YES Vice-mayor Crail
Councilmember Cataldo
Councilmember Rolfson
Councilmember Guenther
Councilmember Walker
Councilmember Bryant
Mayor Stile

NO None

CITY MANAGER'S REPORT

Steve Langley, Electric Utility Director, informed about the EOC and annual Hurricane exercise that will be held on Thursday of that week.

Jim Faulkner, IT Director, informed about the City's internet security, a visit from a cyber security division of the Department of Homeland Security, and cyber attack mitigation efforts in place by the City.

City Manager Comiskey stated the reclaimed water pump has been re-established and should now be keeping up with the community's demand. The City continues to move forward with additional options to further bolster the City's reclaimed water supply capabilities.

City Manager Comiskey spoke on the proposed traffic light at the Lakes of Mount Dora. The DOT has put the project under design and is expecting to have funding. This project may be completed sooner than expected. An additional meeting will take place at the Lakes on June 21st.

CITY ATTORNEY'S REPORT

City Attorney Sutphen spoke about the next steps for the Charter Amendment. She mentioned that the survey in regarding boards and committees will be placed on the next agenda.

DRAFT

COMMUNICATIONS AND REPORTS

1. Council Member Austin Guenther
   No report

2. Council Member Cal Rolfson
   Councilmember Rolfson spoke about the expansion of the children's library.

3. Council Member Nate Walker
   Councilmember Walker applauded those who came out to speak tonight, and mentioned upcoming events.

4. Council Member Doug Bryant
   Councilmember Bryant spoke on the banners that were placed downtown, the recent planting of flowers, and the resignation of the police chief.

5. Council Member John Cataldo
   Councilmember Cataldo thanked several constituents from District 5 for the planting of a tree.

6. Vice-mayor Marc Crail
   Vice-Mayor Crail mentioned on June 21st at 3:00 p.m., there would be a meeting at the Lakes of Mount Dora for an update on the traffic light. He encouraged the City to write a letter in support of reducing the speed limit at the intersecting routes 44. All council members agreed upon sending the letter.

7. Mayor Crissy Stile
   Mayor Stile spoke on the children's library expansion and Juneteenth.

FUTURE MEETING DATES

1. June 13, 2022, 10:00 AM, Budget Workshop

2. June 21, 2022, 6:00 PM, Regular Session

3. June 27, 2022, 10:00 AM, Budget Workshop

4. July 5, 2022, 6:00 PM, Regular Session

DRAFT

ADJOURNMENT

MOTION BY COUNCILMEMBER ROLFSON TO ADJOURN; COUNCILMEMBER GUENTHER SECONDED THE MOTION. MOTION APPROVED BY A UNANIMOUS VOICE VOTE.

There being no further business for discussion, the meeting adjourned at approximately 8:53 P.M.

_____

CRISSY STILE, MAYOR
City of Mount Dora

_____

JESSICA BURNHAM, CITY CLERK
City of Mount Dora

DRAFT

CITY OF
MOUNT DORA, FLORIDA
CRA BOARD
MINUTES

June 7, 2022

CALL TO ORDER

Having been duly advertised as required by law, Chairperson Crissy Stile called the CRA Governing Board Session of City Council to order at 8:53 P.M. in the Mount Dora Council Chamber.

ACTION ITEMS

1. Request Approval of the Commercial Visual Improvement (CVIP) Program Agreement Between the City of Mount Dora Community Redevelopment Agency and Benjamin and Eve Passmore and Jeffery P. and Peggy L. Herbst Related to 405 S. Highland Street

   Planning Director Vince Sandersfeld, spoke on the item and provided Council with the history of the project.

   MOTION BY BOARD MEMBER GUENTHER TO APPROVE THE COMMERCIAL VISUAL IMPROVEMENT PROGRAM (CVIP) AGREEMENT BETWEEN THE CITY OF MOUNT DORA COMMUNITY REDEVELOPMENT AGENCY AND BENJAMIN AND EVE PASSMORE AND JEFFREY P. AND PEGGY L. HERBST RELATED TO 405 S. HIGHLAND STREET; BOARD MEMBER ROLFSON SECONDED THE MOTION. MOTION APPROVED BY A ROLL CALL VOTE.

YES	Boardmember Guenther
	Boardmember Rolfson
	Boardmember Cataldo
	Boardmember Walker
	Boardmember Bryant
	Vice-chairperson Crail
	Chairperson Stile
NO	None

DRAFT

ADJOURNMENT

MOTION BY BOARDMEMBER ROLFSON TO ADJOURN; BOARDMEMBER WALKER SECONDED THE MOTION. MOTION APPROVED BY A UNANIMOUS VOICE VOTE.

There being no further business for discussion, the meeting adjourned at approximately 8:55 P.M.

CRISSY STILE
Chairperson

JESSICA BURNHAM
City Clerk

DRAFT

CITY OF
MOUNT DORA, FLORIDA
NORTHEAST CRA BOARD
MINUTES

June 7, 2022

CALL TO ORDER

Having been duly advertised as required by law, Chairperson Crissy Stile called the CRA Governing Board Session of City Council to order at 8:56 P.M. in the Mount Dora Council Chamber.

ACTION ITEMS

1. Request Approval of the Community Event & Program Sponsorship Application for the 2022 Juneteenth Festival Grant Agreement

   Planning Director Vince Sandersfeld spoke about the application and the event.

   MOTION BY BOARDMEMBER WALKER TO APPROVE THE COMMUNITY EVENT & PROGRAM SPONSORSHIP APPLICATION FOR THE 2022 JUNETEENTH FESTIVAL GRANT AGREEMENT; BOARDMEMBER ROLFSON SECONDED THE MOTION. MOTION APPROVED BY A ROLL CALL VOTE.

   YES Boardmember Walker
   Boardmember Rolfson
   Boardmember Cataldo
   Boardmember Guenther
   Boardmember Bryant
   Vice-chairperson Crail
   Chairperson Stile
   NO None

   Christine King-Harris, 402, Jackson Avenue, spoke about budgeting.

   Brian Young, 1024 North Rossiter Street, corrected the announced hours of the event and encouraged attendance.

DRAFT

ADJOURNMENT

MOTION BY BOARDMEMBER ROLFSON TO ADJOURN; BOARDMEMBER GUENTHER SECONDED THE MOTION. MOTION APPROVED BY A UNANIMOUS VOICE VOTE.

There being no further business for discussion, the meeting adjourned at approximately 9:01 P.M.

CRISSY STILE
Chairperson

JESSICA BURNHAM
City Clerk

DRAFT

CITY OF
MOUNT DORA, FLORIDA
CITY COUNCIL
MINUTES

June 21, 2022 City Hall
510 N. Baker St.
Mount Dora, FL 32757

CALL TO ORDER

Having been duly advertised as required by law, Mayor Crissy Stile called the Regular Session of City Council to order at 6:00 p.m. in the Mount Dora Council Chambers.

MOMENT OF SILENCE & PLEDGE OF ALLEGIANCE

Councilmember Cataldo led a Moment of Silence and Pledge of Allegiance to the Flag.

ROLL CALL

Members Present
Crissy Stile, Mayor
Marc Crail, Vice-Mayor
John Cataldo, District 1
Cal Rolfson, District 2
Austin Guenther, District 3
Nate Walker, District 5
Doug Bryant, At-Large

Also Present
Patrick Comiskey, City Manager
Sherry G. Sutphen, City Attorney
Jessica Burnham, City Clerk

PRESENTATIONS

1. Olde Mount Dora Carriage Company

   Misty Sommer, Economic Development Manager, introduced the Olde Mount Dora Carriage Company, who provided the Council with a presentation which is attached as Exhibit "A".

   Discussion ensued about the routes that the carriages could possibly take, the operation of the carriages, and possible ordinances for the carriages.

   Council provided the City Attorney with direction to draft an ordinance related to this item.

PUBLIC COMMENTS

Mayor Stile opened public comment

Sue Parent, 1515 Sunset Circle, Spoke on the possibility of proclaiming July as American Pride Month.

Mayor Stile closed public comment

DRAFT

APPROVAL OF AGENDA

MOTION BY COUNCILMEMBER WALKER TO APPROVE THE AGENDA; COUNCILMEMBER GUENTHER SECONDED THE MOTION. MOTION APPROVED BY A UNANIMOUS VOICE VOTE.

BOARD APPOINTMENTS

1. Lake-Sumter Metropolitan Planning Organization (MPO) Technical Advisory Committee Member Appointment

   MOTION BY COUNCILMEMBER WALKER TO APPOINT GEORGE MAREK, CITY ENGINEER, TO THE LAKE-SUMTER METROPOLITAN PLANNING ORGANIZATION (MPO) TECHNICAL ADVISORY COMMITTEE MEMBER APPOINTMENT AND VINCE SANDERSFELD, PLANNING DIRECTOR, AS THE ALTERNATE; COUNCILMEMBER GUENTHER SECONDED THE MOTION. MOTION APPROVED BY A UNANIMOUS VOICE VOTE.

CONSENT AGENDA

1. Request Approval of Amendment 1 to the Utility Upsizing Impact Fee Credit Agreement between the City of Mount Dora and Forestar (USA) Real Estate Group, Inc. (formerly with D.R. Horton, Inc.), Related to the Timberwalk PUD

2. Request Adoption of Resolution 2022-42, Rankings for Architectural and Engineering Services for the Community Resource and Recreation Center

3. Request Approval of the Agreement Between the City of Mount Dora and Round Lake Charter, Inc., Related to Before/After Care

4. Request Approval of the Agreement between the City of Mount Dora and Round Lake Charter, Inc., Related to Summer Camp

5. Request Approval of the Agreement between the City of Mount Dora and Round Lake Charter, Inc., Related to Transportation

   MOTION BY COUNCILMEMBER GUENTHER TO APPROVE THE CONSENT AGENDA; COUNCILMEMBER ROLFSON SECONDED THE MOTION. MOTION APPROVED BY A UNANIMOUS VOICE VOTE.

ACTION ITEMS

DRAFT

1. Request Approval of the Amended and Restated Parking Agreement between the City of Mount Dora Florida, the City of Mount Dora Community Redevelopment Agency (CRA), and The First United Methodist Church, Inc.

   Adam Sumner, Deputy Planning Director, provided the council with an overview of the agenda item and stated the agreement is to extend the partnership for ten years.

   Mayor Stile opened public comment

   No one spoke

   Mayor Stile closed public comment

   Discussion took place on the possibility of, in the future, speaking with the church about having a parking garage on this property.

   MOTION BY COUNCILMEMBER ROLFSON TO APPROVE THE AMENDED AND RESTATED PARKING AGREEMENT BETWEEN THE CITY OF MOUNT DORA FLORIDA, THE CITY OF MOUNT DORA COMMUNITY REDEVELOPMENT AGENCY (CRA), AND THE FIRST UNITED METHODIST CHURCH, INC.; COUNCILMEMBER GUENTHER SECONDED THE MOTION. MOTION APPROVED BY A ROLL CALL VOTE.

   YES Councilmember Rolfson
   Councilmember Guenther
   Councilmember Walker
   Councilmember Bryant
   Councilmember Cataldo
   Vice-Mayor Crail
   Mayor Stile

   NO None

2. Request Adoption of Resolution No. 2022-40, Reimposition of Fire Services Special Assessment

   City Attorney Sherry Sutphen read Resolution No. 2022-40 , Reimposition of Fire Services Special Assessment, by title only.

   RESOLUTION NO. 2022-40

   A RESOLUTION OF THE CITY OF MOUNT DORA, FLORIDA, PERTAINING TO THE RE-IMPOSITION OF THE FIRE SERVICES SPECIAL ASSESSMENT AND ESTABLISHMENT OF PRELIMINARY ASSESSMENT FOR FISCAL YEAR 202-23; PROVIDING FOR AUTHORITY; PROVIDING A PURPOSE AND DEFINITIONS; PROVIDING FOR THE DELIVERY OF FIRE PROTECTION

DRAFT

SERVICES, FACILITIES AND PROGRAMS; PROVIDING FOR THE IMPOSITION AND COMPUTATION OF FIRE SERVICES SPECIAL ASSESSMENTS; PROVIDING A LEGISLATIVE DETERMINATION OF SPECIAL BENEFIT AND FAIR APPORTIONMENT; PROVIDING FOR COST APPORTIONMENT METHODOLOGY; PROVIDING FOR PARCEL APPORTIONMENT METHODOLOGY; PROVIDING A DETERMINATION OF FIRE SERVICES ASSESSED COSTS AND THE ESTABLISHMENT OF ANNUAL FIRE SERVICES SPECIAL ASSESSMENTS FOR FISCAL YEAR 2022-23; PROVIDNG FOR AN ASSESSMENT ROLL; PROVIDING FOR AUTHORIZATION OF PUBLIC HEARING; PROVIDING FOR NOTICE BY PUBLICATION; PROVIDING FOR NOTICE BY MAIL; PROVIDING A METHOD OF COLLECTION; PROVIDNG FOR APPLICATION OF ASSESSMENT PROCEEDS; PROVIDING FOR SCRIVENER'S ERRORS; PROVIDING FOR CONFLICTS; PROVIDING FOR SEVERABILITY; AND PROVIDING AN EFFECTIVE DATE.

Patrick Comiskey, City Manager, spoke on the agenda item and stated it is being proposed to put the rate back to two nineteen.

Mayor Stile opened public comment

No one spoke

Mayor Stile closed public comment

MOTION BY VICE-MAYOR CRAIL TO APPROVE RESOLUTION NO. 2022-40, REIMPOSITION OF FIRE SERVICES SPECIAL ASSESSMENT; COUNCILMEMBER ROLFSON SECONDED THE MOTION. MOTION APPROVED BY A ROLL CALL VOTE.

YES Vice-Mayor Crail
Councilmember Rolfson
Councilmember Walker
Councilmember Bryant
Mayor Stile

NO Councilmember Cataldo
Councilmember Guenther

3. Request Approval of the Emergency Purchase of Water Meters for Utility Inventory from Ferguson Waterworks, Inc.

Christopher Gaw, Interim Utility Director, spoke on the high demand for water meters at the current time.

Mayor Stile opened public comment

DRAFT

No one spoke

Mayor Stile closed public comment

Discussion ensued on whether four hundred meters would be enough.

City Manager Comiskey inquired about the possibility of the council increasing the number of meters from four hundred to six hundred if needed.

MOTION BY VICE-MAYOR CRAIL TO APPROVE THE EMERGENCY PURCHASE OF UP TO SIX HUNDRED WATER METERS FOR UTILITY INVENTORY FROM FERGUSON WATERWORKS, INC.; COUNCILMEMBER BRYANT SECONDED THE MOTION. MOTION APPROVED BY A ROLL CALL VOTE.

YES	Vice-Mayor Crail Councilmember Byant Councilmember Cataldo Councilmember Rolfson Councilmember Guenther Councilmember Walker Mayor Stile
NO	None

PUBLIC HEARINGS - RESOLUTIONS/ORDINANCES

1. Request Approval of the Final Reading of Ordinance No. 2022-39, Annexation for Lake County Water Authority (153.79 Acres)

City Attorney Sutphen read Ordinance No. 2022-39, Annexation for Lake County Water Authority (153.79 Acres), by title only.

Ordinance No. 2022-39

AN ORDINANCE OF THE CITY OF MOUNT DORA, FLORIDA, PERTAINING THE VOLUNTARY ANNEXATION OF PROPERTY GENERALLY LOCATED SOUTH OF SR 46, TERMINUS OF ROBIE AVENUE, AND ON THE WEST SIDE OF ROUND LAKE ROAD; PROVIDING FOR LEGISLATIVE FINDINGS AND INTENT; PROVIDING FOR VOLUNTARY ANNEXATION; PROVIDING FOR EFFECT OF ANNEXATION; PROVIDING AN AMENDMENT TO CHAPTER 2, CODE OF ORDINANCES; PROVIDING FOR FILING REQUIREMENTS; PROVIDING FOR IMPLEMENTATION OF ADMINISTRATIVE ACTIONS; PROVIDING A SAVINGS CLAUSE; PROVIDING FOR LIMITED CODIFICATION AND SCRIVENER'S ERRORS; PROVIDING FOR CONFLICTS; PROVIDING FOR SEVERABILITY; AND PROVIDING AN EFFECTIVE DATE.

DRAFT

Councilmember Bryant inquired about protecting the aquifer recharge at Wolf Branch and stated that bringing it into the city would help.

Ben Garcia, Interim Executive Director for the Lake County Water Authority, stated the goal of the board is to be able to protect the property and thanked the city staff for helping with the project.

Mayor Stile opened public comment

Christine Harris, 402 Jackson, spoke on the agenda item.

Mayor Stile closed public comment

MOTION BY COUNCILMEMBER BRYANT TO APPROVE THE FINAL READING OF ORDINANCE NO. 2022-39, ANNEXATION FOR LAKE COUNTY WATER AUTHORITY (153.79 ACRES); VICE-MAYOR CRAIL SECONDED THE MOTION. MOTION APPROVED BY A ROLL CALL VOTE.

YES	Councilmember Bryant Vice-Mayor Crail Councilmember Cataldo Councilmember Rolfson Councilmember Guenther Councilmember Walker Mayor Stile
NO	None

2. Request Approval of Final Reading of Ordinance No. 2022-07, Amending Prohibited Parking in Specified Places

City Attorney Sutphen read Ordinance No. 2022-07, Amending Prohibited Parking in Specified Places, by title only.

Ordinance No. 2022-07

AN ORDINANCE OF THE CITY OF MOUNT DORA, FLORIDA, AMENDING THE CITY OF MOUNT DORA CODE OF ORDINANCES, CHAPTER 42, TRAFFIC AND VEHICLES; PROVIDING FOR LEGISLATIVE FINDINGS AND INTENT; PROVIDING FOR AMENDMENTS TO CHAPTER 42, TRAFFIC AND VEHICLES, ARTICLE II, STOPPING, STANDING AND PARKING, SECTION 42-31, PROHIBITED PARKING IN SPECIFIED PLACES; PROVIDING FOR THE IMPLEMENTATION OF ADMINISTRATIVE ACTIONS; PROVIDING FOR CODIFICATION AND SCRIVENER'S ERRORS; PROVIDING A SAVINGS CLAUSE; PROVIDING FOR CONFLICTS; PROVIDING FOR SEVERABILITY; AND PROVIDING AN EFFECTIVE DATE.

DRAFT

Mayor Stile opened public comment

Steve Rocca, Co-Owner of Walk in the Woods, mentioned that we do not want these vehicles to stop on the main street and that we should keep the alleys accessible.

Michelle Middleton, Project manager for Mount Dora Market Place, stated she believes that if this is to pass, it would create more issues.

Mayor Stile closed public comment

Discussion took place about enforcing the loading zoning being kept cleared, the possibility of re-striping the loading zoning areas and the signage.

Vice-Mayor Crail suggested delaying the final vote to see if the extra enforcement would help with the issue.

MOTION BY VICE-MAYOR CRAIL TO DENY THE FINAL READING OF ORDINANCE NO. 2022-07, AMENDING PROHIBITED PARKING IN SPECIFIED PLACES ; COUNCILMEMBER WALKER SECONDED THE MOTION. MOTION APPROVED BY A ROLL CALL VOTE.

The council discussed the motion.

YES	Vice-Mayor Crail Councilmember Walker Councilmember Bryant Councilmember Cataldo Councilmember Rolfson Mayor Stile
NO	Councilmember Guenther

CITY MANAGER'S REPORT

1. Lobbyist Update

City Manager Comiskey, provided the council with an update from the lobbyist.

City Manager Comiskey gave an update to the traffic lights at the entrance to the Lakes of Mount Dora and also mentioned that Interim Chief Gibson has been conducting training sessions with the police officers in regards to use of force.

CITY ATTORNEY'S REPORT

City Attorney Sutphen reported on the survey for the board and committees that will be placed on the next meeting's agenda, recent legislation changes for charter amendments, the proposed

DRAFT

Urban Forest Committee, and the letter that was received from Florida Carry in regards to one of our Ordinances that has a provision in it that relates to discharging a fire arm in our parks.

Discussion took place about the Urban Forest Committee and the possibility of having any appeals go to a magistrate's hearing.

COMMUNICATIONS AND REPORTS

1. Council Member Cal Rolfson

   Councilmember Rolfson mentioned his reasons for zooming into the meeting this evening and that there would be an MPO board meeting being held tomorrow.

2. Council Member Nate Walker

   Councilmember Walker spoke on the Juneteenth event that was held this past weekend.

3. Council Member Doug Bryant

   Councilmember Bryant thanked all the individuals involved at the Juneteenth event, thanked all involved at the Lakes of Mount Dora meeting, and spoke about a workshop that was held at the library in regards to the forest preservation area.

4. Council Member John Cataldo

   No report

5. Council Member Austin Guenther

   Councilmember Guenther stated he would not be at the next meeting.

6. Vice-Mayor Marc Crail

   Vice-Mayor Crail spoke about the Juneteenth event and stated it was a traffic event and thanked the City staff who have worked so hard on the traffic light for the Lakes of Mount Dora.

7. Mayor Crissy Stile

   Mayor Stile spoke about the Juneteenth event and stated it was a great event and mentioned that seven hundred and sixty-four pounds had been recycled by herself and volunteers.

FUTURE MEETING DATES

1. June 27, 2022, 10:00 AM, Work Session

DRAFT

2. July 5, 2022, 6:00 PM, Regular Session

3. July 11, 2022, 10:00 AM, Work Session

4. July 19, 2022, 6:00 PM, Regular Session

ADJOURNMENT

MOTION BY COUNCILMEMBER GUENTHER TO ADJOURN ; COUNCILMEMBER WALKER SECONDED THE MOTION. MOTION APPROVED BY A UNANIMOUS VOICE VOTE.

There being no further business for discussion, the meeting adjourned at approximately 7:55 p.m.

CRISSY STILE, MAYOR
City of Mount Dora

JESSICA BURNHAM
City Clerk

DRAFT

CITY OF
MOUNT DORA, FLORIDA
CRA BOARD
MINUTES

June 21, 2022

CALL TO ORDER

Having been duly advertised as required by law, Chairperson Crissy Stile called the Regular Session of City Council to order at 7:56 p.m. in the Mount Dora Council Chambers.

ROLL CALL

PUBLIC COMMENTS

Chairperson Stile opened public comment.

No one spoke.

Chairperson Stile closed public comment.

CONSENT AGENDA

ACTION ITEMS

1. Request approval of the Amended and Restated Parking Agreement Between the City of Mount Dora Florida, the City of Mount Dora Community Redevelopment Agency (CRA), and The First United Methodist Church, Inc.

   Adam Sumner, Deputy Planning Director, introduced the agenda item and mentioned this item was in relation to the item that was just approved by the City Council.

   MOTION BY BOARD MEMBER WALKER TO APPROVE THE AMENDED AND RESTATED PARKING AGREEMENT BETWEEN THE CITY OF MOUNT DORA, FLORIDA, THE CITY OF MOUNT DORA COMMUNITY REDEVELOPMENT AGENCY (CRA), AND THE FIRST UNITED METHODIST CHURCH, INC.; BOARD MEMBER GUENTHER SECONDED THE MOTION. MOTION APPROVED BY A ROLL CALL VOTE.

   YES Board Member Walker
   Board Member Guenther
   Board Member Bryant
   Board Member Cataldo
   Board Member Rolfson
   Vice-Chair Crail
   Chairperson Stile

DRAFT

NO None

DISCUSSION ITEMS

OTHER BUSINESS

ADJOURNMENT

MOTION BY BOARD MEMBER GUENTHER TO ADJOURN; BOARD MEMBER WALKER SECONDED THE MOTION. MOTION APPROVED BY A UNANIMOUS VOICE VOTE.

There being no further business for discussion, the meeting adjourned at approximately 7:58 p.m.

CRISSY STILE, CHAIRPERSON
City of Mount Dora

JESSICA BURNHAM
City Clerk

DRAFT

510 N. Baker St.
Mount Dora, FL 32757
352-735-7126

DATE: **July 5, 2022**

TO: **Honorable Mayor and City Council Members**

FROM: **Patrick C. Comiskey, City Manager** Patrick C. Comiskey

SUBJECT: Request Approval to Waive Fees for Use of the Martin Luther King Center by ALCO

Introduction:
This is a request for City Council to waive rental fees for use of the Martin Luther King Center by ALCO for two (2) community engagement sessions.

Discussion:
ALCO (Acceptance * Love * Compassion * Open Mindedness) has requested to utilize the Martin Luther King Center ("MLK Center") to host two (2) community engagement sessions on Saturday, August 6, 2022 and Saturday, November 19, 2022. The group's representatives, Terri McConnell and Juan Perez, have requested a waiver of rental fees for use of the MLK Center for these sessions. Total estimated cost for the rental is $240.

Pursuant to the City's Master Fee Schedule adopted under Resolution No. 2022-03, "only City Council may reduce said fees below the cost and expenses incurred by the City."

Budget Impact:
The total estimated rental fees are $240.

Strategic Impact:
N/A

Recommendation:
City Council receive input and determine whether to provide a waiver of fees for use of the Martin Luther King Center for two (2) community engagement sessions.

Attachment(s):

Prepared by:	Merry Lovern , Executive Assistant	
Reviewed by:	Sherry Sutphen, City Attorney	Approved - 6/29/2022
	Jessica Burnham, City Clerk	Approved - 6/29/2022
	Jeanann Hand, Deputy City Clerk	Approved - 6/29/2022
	Patrick Comiskey, City Manager	Final Approval - 6/29/2022

510 N. Baker St.
Mount Dora, FL 32757
352-735-7126

DATE: **July 5, 2022**

TO: **Honorable Mayor and City Council Members**

FROM: **Patrick C. Comiskey, City Manager** Patrick C. Comiskey

SUBJECT: Request Approval of Agreement between the School Board of Lake County and the City of Mount Dora for School Resource Officer Program 2022-2023

Introduction:
This is a request for City Council to approve a renewal of a yearly agreement between the School Board of Lake County and the City of Mount Dora for School Resource Officer (SRO) Program 2022-2023 (Round Lake Charter School is a separate agreement).

Discussion:
This is an agreement to provide SROs to Mount Dora High School, Mount Dora Middle School, and Triangle Elementary School to interact with students during the regular class schedule and at extra-curricular school activities so as to provide additional security to students, school personnel, the school community, and school property.

Budget Impact:
Reimbursement of $193,962 for Mount Dora Police Department officers' salaries and benefits dedicated to each of the three schools during the school year.

Strategic Impact:
Goal 2: Public Safety
Partnership between the City of Mount Dora and the School Board of Lake County provides a safe environment for students, faculty, and staff and allows for positive relationship building between the SROs and students.

Recommendation:
City Council approve the agreement between the School Board of Lake County and the City of Mount Dora for School Resource Officer Program 2022-2023.

Attachment(s):

1. Agreement between the School Board of Lake County and The City of Mount Dora School Resource Officer Program 2022-2023 (ADA)

Prepared by:	Jeanann Hand, Deputy City Clerk	
Reviewed by:	Michael GIbson, Interim Chief of Police	Approved - 6/13/2022
	Rita Meade, Deputy Finance Director	Approved - 6/14/2022
	Sherry Sutphen, City Attorney	Approved - 6/27/2022
	Jeanann Hand, Deputy City Clerk	Approved - 6/27/2022
	Jessica Burnham, City Clerk	Approved - 6/27/2022
	Patrick Comiskey, City Manager	Final Approval - 6/27/2022

AGREEMENT BETWEEN THE SCHOOL BOARD OF LAKE COUNTY, FLORIDA, AND THE CITY OF MOUNT DORA, FOR SCHOOL RESOURCE OFFICER PROGRAM [2022-2023]

This **AGREEMENT** is entered into by and between the **City of Mount Dora**, a Florida municipal corporation, hereinafter referred to as "LAW ENFORCEMENT AGENCY" and the **School Board of Lake County, Florida**, a political subdivision of the State of Florida, hereinafter referred to as "SCHOOL BOARD".

WITNESSETH:

WHEREAS, the SCHOOL BOARD is seeking three (3) School Resource Officers (SROs) to interact with students during the regular class schedule and at extra-curricular school activities so as to provide additional security to students, school personnel, the school community and school property; and

WHEREAS, the LAW ENFORCEMENT AGENCY is willing to place three (3) **City of Mount Dora** Police Officers at **Triangle Elementary (1), Mount Dora Middle (1), Mount Dora High (1)** for the purpose of carrying out this school program.

NOW, THEREFORE, in and for consideration of the mutual covenants contained herein and other good and valuable consideration, the receipt and sufficiency of which is hereby acknowledged, the parties hereby agree that the LAW ENFORCEMENT AGENCY will provide three (3) sworn Police Officers who are certified pursuant to Section 943.10(1) *Florida Statutes* to the SCHOOL BOARD to act as SROs at the three (3) designated schools under the terms and conditions of this Agreement.

1. Term of Agreement. The term of this Agreement shall be for the next school year, beginning the 10th day of August 2022 through the last day of school for students in May 2023.

2. Compensation. The SCHOOL BOARD will pay the **City of Mount Dora** the sum of One hundred ninety-three thousand nine hundred sixty-two ($193,962.00) Dollars for services of the three (3) SROs provided pursuant to the terms of this Agreement. Such compensation shall be invoiced to the SCHOOL BOARD by the LAW ENFORCEMENT AGENCY in equal quarterly installments (September, November, February and May) commencing on the 1st day of September 2022. Invoices shall be paid by the SCHOOL BOARD within fifteen (15) days of receipt. In the

event that The Board of County Commissioners of Lake County, Florida, agrees to pay for any or all of the police officers assigned to the schools pursuant to this Agreement, then the LAW ENFORCEMENT AGENCY agrees that the SCHOOL BOARD may assign its obligation to pay under this section to The Board of County Commissioners of Lake County, Florida.

3. Scope. The LAW ENFORCEMENT AGENCY shall assign an SRO for three (3) designated schools. The SROs shall interact with students and provide security at the three (3) designated schools. In addition, the SROs shall have the duties and responsibilities listed in Exhibit "A" attached hereto.

4. Background Investigations. The LAW ENFORCEMENT AGENCY represents and warrants to the SCHOOL BOARD that the LAW ENFORCEMENT AGENCY has read and is familiar with Sections 1012.32, 1012.465, 1012.467 and 1012.468, *Florida Statutes* regarding background investigations. The LAW ENFORCEMENT AGENCY covenants to comply with all requirements of the above-cited statutes and shall provide SCHOOL BOARD with proof of compliance upon request. The LAW ENFORCEMENT AGENCY agrees, to the extent permitted by law and only to the extent permitted by 768.28, *Florida Statutes*, to indemnify and hold harmless the SCHOOL BOARD, it's officers, agents and employees from any liability in the form of physical injury, death, or property damage resulting from the LAW ENFORCEMENT AGENCY's failure to comply with the requirements of this paragraph or Florida Statute Sections, 1012.32, 1012.465, 1012.467 and 1012.468, *Florida Statutes*. Any claim against the LAW ENFORCEMENT AGENCY by the SCHOOL BOARD under the preceding sentence shall not include punitive damages or any interest for the period before judgment. Additionally, the LAW ENFORCEMENT AGENCY shall not be liable pursuant to this indemnity to pay a claim or judgment by any one person which exceeds the sum of $200,000 or any claim or judgment, or portions thereof, which, when totaled with all other claims or judgments paid by the LAW ENFORCEMENT AGENCY arising out of the incident or occurrence, exceeds the sum of $300,000. Further, nothing in this paragraph shall be construed as an admission of liability on behalf of the LAW ENFORCEMENT AGENCY.

5. Assignment of Officers. The LAW ENFORCEMENT AGENCY shall determine which SROs will be assigned under this Agreement and will also determine the particular school

to which the SRO will be assigned to. The LAW ENFORCEMENT AGENCY shall provide a notice of the assigned SROs to the school principals of the three (3) designated schools. In the event that the principal of the school where the SRO is assigned believes that the particular SRO is not effectively performing his/her duties and responsibilities, the principal shall notify the SRO in writing. If the situation is not corrected within three (3) working days, the principal shall contact the SRO's immediate supervisor and the Superintendent's designee in writing and provide a copy of said notice to each of them. If the situation is not resolved to the mutual satisfaction of both the SRO's immediate supervisor and the Superintendent's designee within ten (10) days, or if, during the same contract period, the principal determines for a second time that the SRO is not effectively performing his/her duties and responsibilities, then the Principal shall recommend to the Superintendent that the SRO be removed from the program at his/her school, and shall state the reasons as well as the efforts to resolve the problems in writing. The Superintendent, or his/her designee, shall review the request and, if approved, shall provide written notification to the LAW ENFORCEMENT AGENCY who shall transfer the SRO or take other appropriate action within ten (10) business days. In the event the principal considers the SRO's conduct to present a threat to the safety or well-being of the students or staff, the principal will immediately notify the Superintendent and the LAW ENFORCEMENT AGENCY. Upon receipt of such notification, the LAW ENFORCEMENT AGENCY shall take appropriate action.

6. Dismissal/Replacement/Absence.

The LAW ENFORCEMENT AGENCY may dismiss or reassign SROs with or without cause. In the event of the resignation, dismissal, or reassignment of an SRO, or in the case of long-term absences by an SRO, the LAW ENFORCEMENT AGENCY shall provide a temporary replacement for the SRO as soon as practical.

7. Leaves/Coverage.

The Chief of Police or another designated scheduling officer will approve vacations, sick leaves, and other leaves of absence for the SRO. The SRO will communicate approved vacation, sick leaves, trainings or any other leave that impacts SRO presence in schools with the SCHOOL BOARD'S Safety and Security Specialist.

LAW ENFORCEMENT AGENCY shall provide coverage of an SRO during any time in which the SRO will be off campus of the school to include, but not be limited to vacations, sick leaves, other leaves of absence or due to other related assignments.

8. Hours of Assignment. The SROs will be stationed at the three (3) designated schools for eighty (80) hours per two-week period, Monday through Friday, as assigned and scheduled by the respective school principal and as approved by the LAW ENFORCEMENT AGENCY.

9. Additional Hours of Assignment. Additional hours of assignment during a two-week period may be made with prior approval of the LAW ENFORCEMENT AGENCY, if requested by the respective school principal. If the additional hours worked require that overtime be paid to the SROs, the SCHOOL BOARD will reimburse the LAW ENFORCEMENT AGENCY for overtime paid at the SRO's existing pay rate.

10. Off Campus Assignments. Upon the request of the respective school principal and with the prior approval of the LAW ENFORCEMENT AGENCY, an SRO's duties may occasionally include his/her assignment at school functions and activities that are held off campus.

11. Reassignment in Emergency Situations. Nothing in this Agreement shall prevent or interfere with the ability of the LAW ENFORCEMENT AGENCY to temporarily withdraw an assigned SRO from his/her post at the three (3) designated schools to respond to emergency situations as determined in the sole judgment and discretion of the LAW ENFORCEMENT AGENCY.

12. Supervising Authority. During the term of this Agreement, the SROs assigned shall remain employees of the LAW ENFORCEMENT, under the authority of the chain of command of the LAW ENFORCEMENT AGENCY and subject to all other rules and regulations of the LAW ENFORCEMENT AGENCY. The SROs will report to their respective school principal for assignment of duties and work schedules, including the extracurricular activities during the regular school day for up to eighty (80) hours for each officer per two-week period. Each SRO shall remain, at all times, an employee of the LAW ENFORCEMENT AGENCY. Workers

Compensation coverage, as required by law, will be provided for the officer by the LAW ENFORCEMENT AGENCY.

13. Salary and Benefits. The LAW ENFORCEMENT AGENCY will provide the salary and benefits to each SRO assigned, including uniforms and equipment and any applicable overtime pay as agreed to above.

14. Vehicle. The LAW ENFORCEMENT AGENCY will provide vehicles for SROs if or when determined necessary by the LAW ENFORCEMENT AGENCY.

15. Threats to School Safety.

A. Pursuant to Section 1006.13(4), *Florida Statutes*, any acts that pose a threat to school safety, whether committed by a student or adult, shall be reported to the School Principal, or his or her designee, who shall report the acts to the SRO and the School Board's School Safety Specialist.

B. If requested by the School Principal, or his or her designee, the SRO, or other appropriate law enforcement officers, shall assist in the investigation of the acts that pose a threat to school safety; upon conclusion of the investigation, the SRO shall report the findings of the investigation to the School Board's School Safety Specialist to properly document the disposition of the incident. Additionally, the School Principal, or his or her designee, shall consult with SRO concerning appropriate delinquent acts and crimes.

16. Termination of Agreement. This Agreement may be terminated by either party upon thirty (30) days written notice. Notice shall be deemed given as of the date of deposit of such written NOTICE in the course of transmission in the United States Postal Service and addressed as follows:

SCHOOL BOARD:

Superintendent of Schools
School Board of Lake County
201 West Burleigh Boulevard
Tavares, FL 32778

LAW ENFORCEMENT AGENCY:	City Manager City of Mount Dora 510 N. Baker Street Mount Dora, FL 32757

Upon termination pursuant to this subsection, payment will be made by the SCHOOL BOARD or reimbursement made by the LAW ENFORCEMENT AGENCY based on a pro rata charge for services for that portion of the school year covered by this Agreement prior to termination.

17. Entire Agreement. This Agreement embodies the entire agreement and understanding between the parties with respect to the subject matter hereto and supersedes all prior Agreements, representations and understandings either oral, written or otherwise relating thereto.

IN WITNESS WHEREOF, the parties hereto have executed this Agreement on the respective dates under each signature.

"SCHOOL BOARD"

THE SCHOOL BOARD OF LAKE COUNTY, FLORIDA

By:_____
Stephanie Luke, Chairperson

Date: _____

Approved as to form:

Attest: _____
Diane S. Kornegay, Superintendent

_____
School Board Attorney

"LAW ENFORCEMENT AGENCY"
CITY OF MOUNT DORA

By:_____
Crissy Stile, Mayor

Date: _____

Attest: _____
Jessica Burnham, City Clerk

Approved as to form:

_____

Sherry Sutphen, City Attorney

EXHIBIT "A"

In addition to the routine duties and responsibilities of the SROs, the SROs shall have the following specific duties and responsibilities:

1. Each SRO shall at all times perform his/her duties in accordance with City of Mount Dora Police Department's standard operating procedures.

2. The SROs shall serve as resource instructors providing programs in crime prevention that encourage students to become responsible citizens.

3. The SROs shall also assist the orderly flow of traffic on school grounds.

4. Each SRO shall maintain all law enforcement powers, duties, and responsibilities inclusive of his/her position as City of Mount Dora Police Officers while assigned to the SRO program.

5. Each SRO shall be responsible to his/her agency in all matters relating to employment, however, activities conducted by the SROs which are part of the regular school instruction program shall be under the direction of the principal or his/her designee.

6. Each SRO shall be at his/her school during normal school hours of operation and shall utilize the school's computer-based management system to sign in and out to verify attendance. During times that the SROs are unable to be on campus or need to leave campus, those times will be coordinated with the principal or his/her designee and each SRO's supervisor. The SRO supervisor will assure that the School has a replacement SRO on campus.

7. The SROs shall perform such duties as directed by his/her agency when school is not in session. The principal or his/her designee shall advise the Officers' supervisor of the school's calendar.

8. The SROs may contact students during school hours in conjunction with a criminal investigation so long as such contact does not interfere with or impede the orderly operation of the school or the rights of the individual students.

9. All student record information will be maintained in accordance with the provisions of Florida Statutes.

10. The SROs shall interface with students between class breaks, during lunch periods, before and after school and at school activities at which the SROs are in attendance. The SROs will not be assigned to a permanent school related duty post so as not to establish predictable patterns.

11. In the interest of maintaining a safe and orderly school environment, student and campus supervision is of critical importance. The SROs shall take a prominent role in supervision responsibilities, which shall be coordinated with and agreed to by the SROs and the designated

school principal. While school is in session, the SROs shall be present on and around the school campus except as permitted in paragraph 6 of this Exhibit A.

12. The SROs will serve as a referral resource for students, faculty and parents to community agencies.

13. The SROs will serve as a Law Enforcement resource to school administration and the district manager of security services.

14. The SROs shall be familiar and offer support with the plans and strategies for the prevention and control of dangerous situations at the school.

15. The SROs will coordinate activities with the school administration and the school guidance department in an effort to identify those students who exhibit indications of early delinquent behavior.

16. The SROs shall attend meetings of school faculty and requested administrative meetings during school hours on a regular basis.

17. The SROs shall not act as a school disciplinarian, as disciplining students is a school responsibility. However, the principal shall contact the SROs for any violations of the law, and the SROs shall determine whether law enforcement action is appropriate.

18. The SROs shall take law enforcement action as necessary and as permitted under Florida law and shall inform the school principal of such action unless it would impede a criminal investigation, under such circumstances as practical. The SROs shall take appropriate law enforcement action against intruders and unwanted guests who may appear at the school and related school functions, to the extent that the SROs may do so under the authority of law. Whenever practical, the SROs shall advise the principal before requesting additional law enforcement assistance on campus.

19. The SROs shall be informed by school personnel of any situation occurring on school grounds that would appear to be a violation of the law of criminal nature.

20. The SROs shall maintain detailed accurate records of his/her activities, and provide a written monthly report to the LAW ENFORCEMENT AGENCY who shall provide such information to the Safe Schools Department of the SCHOOL BOARD.

21. The SROs and school administration shall work together to keep each other informed during the course of all criminal investigations as permitted by law and as practical. This provision shall not be interpreted so as to interfere with or impede the SROs' law enforcement duties, obligations and/or powers.

22. The SROs shall work with school administration when determining whether an arrest should be made, or if there is an alternative solution to the incident which would still be in compliance with Florida law. The final decision on whether arrest is appropriate will lie with the

attending SRO or other law enforcement officer on scene at the incident. This provision shall not be interpreted so as to interfere with or impede the SROs' law enforcement duties, obligations or powers.

23. The SROs shall affect a physical arrest for felonies committed on school grounds, particularly those that are "Zero Tolerance", as permitted by law.

24. The SROs shall give assistance to other law enforcement officers and government agencies in matters regarding his/her school assignment, whenever necessary.

25. The parties shall comply with the provisions of the Family Educational Rights and Privacy Act ("FERPA").

510 N. Baker St.
Mount Dora, FL 32757
352-735-7126

DATE: **July 5, 2022**

TO: **Honorable Mayor and City Council Members**

FROM: **Patrick C. Comiskey, City Manager** Patrick C. Comiskey

SUBJECT: Request Establishment of City Boards and Committees Membership Standards Based on Council Survey Results

---

Introduction:
This is an opportunity for councilmembers to review the results of the recent survey regarding City board and committee membership.

Discussion:
Councilmembers responded to a survey created in May of 2022 regarding requirements and recommendations for membership on the City of Mount Dora boards and committees. Seven councilmembers responded and the results are attached.

Budget Impact:
None.

Strategic Impact:
N/A

Recommendation:
Councilmembers make recommendations based upon survey results.

Attachment(s):
1. Survey Results

Prepared by:	Jeanann Hand, Deputy City Clerk	
Reviewed by:	Sherry Sutphen, City Attorney	Approved - 6/29/2022
	Jessica Burnham, City Clerk	Approved - 6/29/2022
	Patrick Comiskey, City Manager	Final Approval - 6/29/2022

ATTACHMENT #1

City of Mount Dora
Boards and Committees Survey City Council Responses
July 5, 2022

Length of appointed term	Number of consecutive terms allowed	Break required before a second term is served consecutively on the same board	Break required before another term is served consecutively on a different board	Max number of terms on a single board	May serve on multiple boards at the same time	May attend via Zoom	May vote via Zoom	Max number of Zoom attendances	Training requirements	Membership requirements
Two years	One	No	No	One term	Yes	Yes	Yes	Three per term	Yes	City resident
Two year terms, maximum 8 years consecutively	Two	No	No	Two terms	No	Yes	Yes	Three per term	Yes	City resident
Four years	Two	No	No	Two consecutively, no max	No	Yes	Yes	Three per year	Yes	City resident
Four years	Two	Yes, after 1 term	No	Four terms	No	Yes	Yes	Three per year or 12 per 4-year term	Yes	City resident
Four years or congruent with Councilmember appointment	Three	Yes, after 2 terms	No	Four terms	No	Yes	Yes	Four per term	Yes	City resident
Commensurate with the appointing member's term	Three	Yes, after 3 terms	Yes, after 1 term	Eight years	No	Yes	Yes	Four per term	Yes	City resident/city business owner required, professionalexpertise preferred for some boards (e.g. HistoricPreservation, Public Arts, Tree Committee)
Commensurate with the appointing member's term	No response	Yes, after 4 2-year te	Yes, after 2 terms	No limit, but break after 2 consecutive terms	No	Yes	No	Depending on health, no limit	Yes, only for CRA, Historic Preservation, and P&Z	Resident, Business Owner, or Professional. Ibelieve that we leave it open to the most qualifiedcandidates.

510 N. Baker St.
Mount Dora, FL 32757
352-735-7126

DATE: **July 5, 2022**

TO: **Honorable Mayor and City Council Members**

FROM: **Patrick C. Comiskey, City Manager** Patrick C. Comiskey

SUBJECT: Request Adoption of Resolution No. 2022-22, Sandy Ridge Village Replat

---

Introduction:
This is a request for City Council to approve Resolution No. 2022-22.

Call Up Item
Mayor Asks Attorney to Read Resolution
City Manager Background
Applicant Comments
Public Hearing
Discussion
Council Action

Discussion:
Further project descriptions are contained in Attachment #1 (*Summary Report*).The applicant is requesting to Replat the existing Sandy Ridge Village. The purpose of this replat is to create two (2) commercial lots. The new lot fronting US Highway 441 is being processed under a separate site plan application for a drive-thru Culver's restaurant. The second commercial lot will have right-of-way frontages along the southern lot line fronting Fiddler Drive right-of-way and J.W. Simpson along the eastern lot line. The applicant has indicated to staff the intended use of the second commercial lot is for a hotel user.

All lots have been configured for consistency with the underlying C-3 (Highway Commercial) zoning district, and the City's Land Development Code platting requirements.

The sequence of events leading to the presentation to the City Council are as follows:

The Planning and Zoning Commission (PZC) at their regularly scheduled meeting held on June 15, 2022, recommended approval (Vote 5-0. Two members were absent) Sandy Ridge Village Replat. Staff Note: The applicant was agreeable to the PZC members' discussions pertaining to

the proposed eastern utility/electric easement width being changed from 15 feet to 20 feet.

The Development Review Committee (DRC) on March 30, 2022 and again on May 17, 2022, recommended approval with conditions of the request for Sandy Ridge Village Replat.

Budget Impact:
There are no budgetary impacts to the City relative to the processing of the replat action.

Strategic Impact:
Development plans which address density and/or intensity changes are consistent with Growth Management and Economic Development Goals to foster development and growth opportunities.

Recommendation:
The City Council approve Resolution No. 2022-22.

Attachment(s):
1. Attachment 1 - Summary Report(ADA)
2. Resolution 2022-22 Sandy Ridge Village Replat.SGS
3. Exhibit A Replat

Prepared by:	Vince Sandersfeld, Planning and Development Director	
Reviewed by:	Sherry Sutphen, City Attorney	Approved - 6/27/2022
	Jessica Burnham, City Clerk	Approved - 6/27/2022
	Jeanann Hand, Deputy City Clerk	Approved - 6/27/2022
	Patrick Comiskey, City Manager	Final Approval - 6/27/2022

CITY OF MOUNT DORA

Planning and Development
510 N. Baker St.
Mount Dora, FL 32757
352-735-7113
Fax: 352-735-7191
E-mail: plandev@cityofmountdora.com

SUMMARY REPORT FOR SANDY RIDGE VILLAGE REPLAT

Report Date:
July 5, 2022

Reference/Support:
Section 4.1.2.4 of the City's Land Development Code
Section 3.4.7 of the City's Land Development Code
Chapter 6 of the City's Land Development Code

Background:
Site Summary:

Owners:	Simpson Family Partnership, Inc.
Applicant:	One Oak Development, LLC – Andy Hawkins
Engineer:	Kimley-Horn and Associates, Inc. – Thomas Inman, P.E
Surveyor:	Extreme Surveying of Florida, Inc. – Alex B. Thompson, Jr., PLS
Existing Use:	Vacant Land, Mater Stormwater Pond, and Orange Groves
Proposed Use:	Two Commercial Lots
	New Lot 1: 270'x257' = 1.60 acres
	New Lot 2: 250'x470' = 2.70 acres
Future Land Use:	Commercial
Current Zoning:	C-3
Site Area:	4.32 acres

Discussion:

The applicant is requesting to Replat the existing Sandy Ridge Village Lot 2. The purpose of this replat is to create two (2) commercial lots. The new lot fronting US Highway 441 is being processed under a separate site plan application for a drive-thru Culver's restaurant. The second commercial lot will have right-of-way frontages along the southern lot line fronting Fiddler Drive right-of-way and J.W. Simpson Wat along the eastern lot line. The applicant has indicated to staff the intended use of the second commercial lot is for a hotel user. All lots have been configured for consistency with the underlying C-3 (Highway Commercial) zoning district, and the City's Land Development Code platting requirements.

ATTACHMENT #1

VICINITY MAP

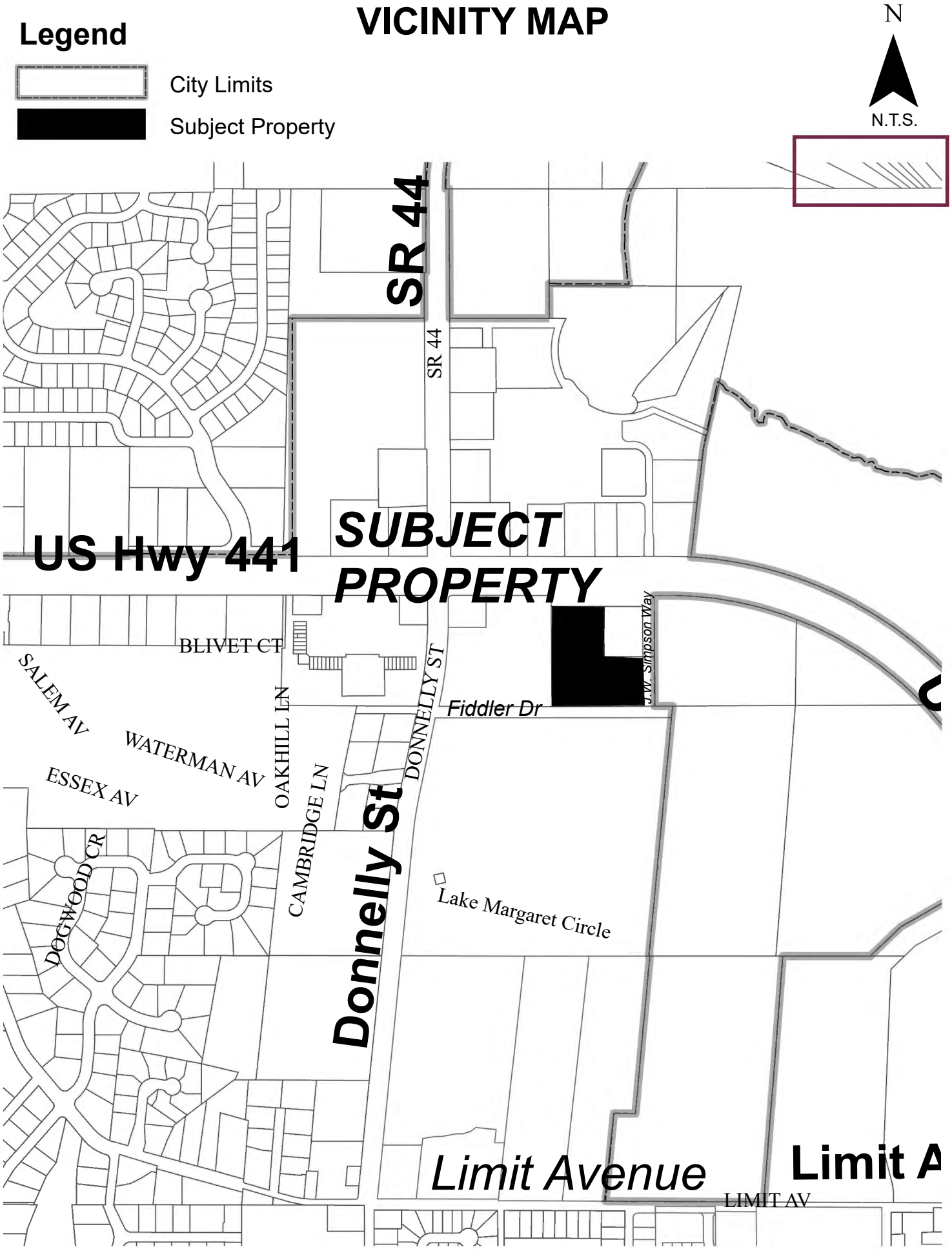

Prepared by: Mount Dora Planning and Development Dept * 510 N. Baker Street, Mount Dora, FL 32757 * 352-735-7112

Informational

2003100125

SANDY RIDGE VILLAGE

SECTION 20, TOWNSHIP 19 SOUTH, RANGE 27 EAST

IN THE CITY OF MOUNT DORA, LAKE COUNTY, FLORIDA

NORTH

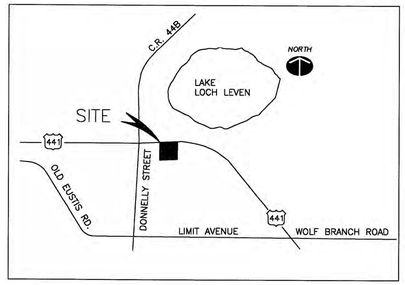

NOT TO SCALE

GRAPHIC SCALE

100 0 50 100 200 300

(IN FEET)
1 inch = 100 ft.

Description:

A tract of land lying in Section 20, Township 19 South, Range 27 East in Lake County, Florida, Said tract of land being more particularly described as follows, Begin at the West 1/4 corner of said section 20, same point being the Southeast corner of lot 2 of Sandy Ridge Crossing as recorded in Plat Book 33, Page 49 of the Public Records of Lake County, Florida; Thence run N02°55'30"W along the East line of said Sandy Ridge Crossing 567.89' to a point on the South Right of Way line of U.S Hwy. 441; Thence run N87°22'00"E along said South Right of Way line of U.S. Hwy 441 530.00'; Thence run S02°55'30"E 312.84'; Thence run S87°22'00"W 60.00'; Thence run S02°55'30"E 255.80' Thence run S87°27'30"W 470.00' to the Point of Beginning containing 6.562 acres more or less.

NOTE:

1. TRACT A IS AN EXISTING INGRESS, EGRESS, UTILITIES AND DRAINAGE EASEMENT AS RECORDED IN BOOK 1183, PAGE 1550 OF THE PUBLIC RECORDS OF LAKE COUNTY, FLORIDA AND AMENDED IN BOOK 2033, PAGE 1336 OF THE PUBLIC RECORDS OF LAKE COUNTY, FLORIDA.

2. LOTS 1 AND 2 ARE SUBJECT TO ACCESS EASEMENT DESCRIBED IN BOOK 2033, PAGE 1362 OF THE PUBLIC RECORDS OF LAKE COUNTY, FLORIDA.

3. ALL UTILITY EASEMENTS SHOWN ON THIS PLAT SHALL ALSO BE EASEMENTS FOR THE CONSTRUCTION, INSTALLATION, MAINTENANCE, AN OPERATION OF CABLE TELEVISION SERVICES; PROVIDED HOWEVER, NO SUCH CONSTRUCTION, INSTALLATION, MAINTENANCE AND OPERATION OF CABLE TELEVISION SERVICES SHALL INTERFERE WITH THE FACILITIES AND SERVICES OF AN ELECTRIC , TELEPHONE , GAS, OR OTHER PUBLIC UTILITY. IN THE EVENT A CABLE TELEVISION COMPANY DAMAGE THE FACILITIES OF A PUBLIC UTILITY, IT SHALL BE SOLELY RESPONSIBLE FOR THE DAMAGES. THIS SECTION SHALL NOT APPLY TO THOSE PRIVATE EASEMENTS GRANTED TO OR OBTAINED BY A PARTICULAR ELECTRIC, TELEPHONE, GAS OR OTHER PUBLIC UTILITY. SUCH CONSTRUCTION, INSTALLATION, MAINTENANCE AND OPERATION SHALL COMPLY WITH THE NATIONAL ELECTRICAL SAFETY CODE AS ADOPTED BY THE FLORIDA PUBLIC SERVICE COMMISSION.

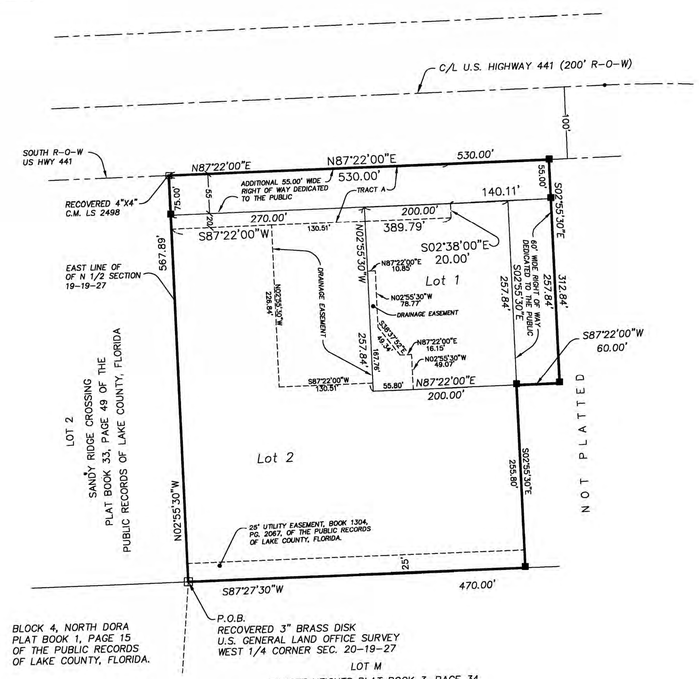

Legend:

•	Permanent Control Point, Nail & Disk, marked PCP, L.S. #5820
—+—	PC, PT, PRC, or Bearing Break
C.M.	Concrete Monument
■	Set C.M. Permanent Reference Monument, P.R.M. LS#5820 .
POC	Point Of Commencement
POB	Point Of Beginning
PC	Point of Curve
PT	Point of Tangent
PI	Point of Intersection
RP	Radius Point
PCC	Point of Compound Curve
PRC	Point of Reverse Curve
(N.R.)	Non Radial
O.R.	Official Record
PG	Page
R	Radius
D	Delta Angle
A	ARC
CB	Chord Bearing
P.S.M.	Professional Surveyor and Mapper
HWY	Highway
R-O-W	Right of Way Line

Bearing based on the East line of the N 1/2 of Section 19-19-27 being N02°55'30"W assumed.

PLAT NOTES: Chapter 177.091 Florida Statutes

1) This plat, as recorded in its graphic form, is the official depiction of the subdivided lands described herein and will in no circumstances be supplanted in authority by any other graphic or digital form of the plat.

2) There may additional restrictions that are not recorded on this plat that may be found in the Public Records of this County.

Land Surveying and Technical Services, Inc.
8237 Scarborough Ct.
Orlando, Florida 32829
Tel. (407) 282-1206 Fax (407) 737-7835

REVIEWER CERTIFICATION

Pursuant to Section 177.081, Florida Statutes, I have reviewed this Plat for conformity to Chapter 177, Florida Statutes and find that said Plat complies wit the technical requirements of that chapter. Provided however that my review does NOT include field verification of any of the coordinates points or measurements shown on this plat.

Michael R. Brunelle, P.S.M.
Farner Barnes and Associates
Florida Certification No.3669 .

12/19/02
Dated

PLAT BOOK 49 PAGE 98

SANDY RIDGE VILLAGE DEDICATION

This is to certify that the undersigned Simpson Family Partnership, Ltd., a Florida Limited Partnership and United Southern Bank, refer to as the "Owners" are the lawful owners of the lands described in the caption hereon, and that has caused the same to be surveyed, and this plat made in accordance with said survey, is hereby adopted as the true and correct plat of said lands. No part of said lands is dedicated to the City of Mount Dora or the public, except as noted on the face of this plat.

IN WITNESS WHEREOF, said owners have caused these presents to be signed by the officer and the individuals named below and its corporate seal to be affixed hereto on 01/02/03 (date)

SIMPSON FAMILY PARTNERSHIP, LTD. seal

Robert L. Simpson
General Partner

witness (print name) Grace C Lindsey

SIGNED AND SEALED IN PRESENCE OF:
By:

witness (print name) Mary Stone

United Southern Bank seal

Allan H. Seabrook Jr.
Vicepresident and Branch Manager

witness (print name) Mary Stone

SIGNED AND SEALED IN PRESENCE OF:
By:

witness (print name) Robert F. Vason Jr.

STATE OF FLORIDA COUNTY OF LAKE

The foregoing instrument was acknowledged before me this 9th day of April, 2002 by Robert L. Simpson. , as General Partner of Simpson Family Partnership,Ltd., and Allan H. Seabrook, Jr., Vicepresident and and Branch Manager of United Southern Bank

They are personally known to me or has produced ( ) as identification and did (did not) take an oath.

MARY STONE
MY COMMISSION # DD 231206
EXPIRES July 10, 2007
Bonded Thru Notary Public Underwriters

NOTARY PUBLIC
(Print Name) Mary Stone
My Commission Expires

PLAT CERTIFICATION FOR PREPARING SURVEYOR

KNOW ALL MEN BY THESE PRESENTS, That the undersigned , being a registered Surveyor and Mapper fully licensed to practice in the State of Florida, does hereby certify that this plat was prepared under his supervision, and that this plat complies with all of the provisions of Chapter 177, Florida Statutes.

Surveyor's Signature — Date: 12/4/02

Miguel A. Cortes — Surveyor's Name (printed)

5820 — Surveyor's Registration Number

Land Surveying and Technical Services, Inc. — Legal Entity's Name

LB 0007007 — Legal Entity's Certificate of Authorization Number

8237 Scarborough Court
Orlando, Florida 32829
Legal Entity's Address

CERTIFICATE OF APPROVAL OF MUNICIPALITY

THIS IS TO CERTIFY, that this plat was presented to City of Mount Dora for record, and the dedication of UTILITY EASEMENT, is accepted for municipal purposes of said city on this 23 day of April 2003 provided that this plat is recorded in the office of the clerk of the circuit court of Lake County, Florida, within 90 days from the approval by said city commission, City of Mount Dora, Florida.

Bernice Thomas — *Attest: Clerk*

By — *Mayor/Commissioner*

CERTIFICATE OF CLERK

I HEREBY CERTIFY, That I have examined the foregoing plat and find that it complies in form with all the requirements of chapter 177, Florida Statutes and was filed for record.

on 3-12-03 *at* 10:51 AM *File No.* 2003100125

Beverly McKinley / D.C.

Clerk of the Circuit Court
in and for Lake County, Florida.

CLERK OF CIRCUIT & COUNTY COURT LAKE COUNTY, FLORIDA

PR22-03Replat

CITY OF MOUNT DORA

City of Mount Dora
Planning and Development
510 N. Baker St.
Mount Dora, FL 32757
352-735-7112
E-mail: plandev@cityofmountdora.com

REPLAT

APPLICATION

Date: 2/3/2022 Project Name Culver's

1. Applicant's Name: Andy Hawkins
   Company's Name: One Oak Development, LLC
   Address: 907 S. Ft. Harrison Ave. Ste. 102
   City, State & Zip: Clearwater, FL 33756
   Phone: 727-210-1900 E-mail: ssucevic@oneoakdev.com; ahawkins@oneoakdev.com

2. Property Owner's Name(s): Simpson Family Partnership, LTD
   Company's Name: Simpson Family Partnership, LTD
   Address: 445 Limit Avenue
   City, State & Zip: Mount Dora, FL 32757
   Phone: 352-383-3224 E-mail: bob@rsimpson.co

3. Engineer's Name: Thomas Inman
   Company's Name: Kimley-Horn and Associates, Inc.
   Address: 12740 Gran Bay Parkway West, Suite 2350
   City, State & Zip: Jacksonville, FL 32258
   Phone: 904-828-3900 E-mail: thomas.inman@kimley-horn.com

4. Surveyor's Name: Alex B. Thompson Jr.
   Company's Name: Extreme Surveying of Florida, inc.
   Address: 29340 Rhodin Place
   City, State & Zip: Wesley Chapel, FL 33545
   Phone: 813-973-2092 E-mail: alex@extreme-surveying.com

5. Zoning District:	C-3 (Highway Commercial)
6. Future Land Use:	Commercial
7. Total Units/Lots:	1
8. Size of Property (Acres):	1.598 acres
9. Name of Existing platted Subdivision:	Sandy Ridge Village, Plat Book 49, Page 98
10. General Location:	600' east of Donnelly Av & US Hwy 441

CERTIFICATION AND SIGNATURE

I CERTIFY THAT, to the best of my knowledge and belief, all information supplied with this application is accurate and I have examined and am familiar with the Land Development Code of the City of Mount Dora, Florida and Chapter 177 of the Florida Statutes and have complied with the requirements of said regulations and statute. I further understand that an incomplete application submittal may cause my application to be deferred to the next posted deadline date.

Owner/Applicant Signature 2-21-22 **Date**

ATTACHMENT #1

Owner's Authorization Letter

I, Robert L. Simpson, General Partner, Simpson Family Partnership, Ltd., a Florida limited partnership, hereby certify that I am the owner of the property described in Exhibit "A" (the "Property"). I hereby authorize Andy Hawkins, One Oak Development, LLC, a Florida limited liability company, to act on my behalf during the processing and presentation of the Site Plan Application and/or Application for Re-plat associated with the Property.

February 17, 2022

Simpson Family Partnership, Ltd., a Florida limited partnership

By: Robert L. Simpson, General Partner
Robert L. Simpson, General Partner

STATE OF FLORIDA
COUNTY OF LAKE

Sworn to and subscribed before me by means of ✓ physical presence or _____ online notarization, this 17th day of February, 2022, by Robert L. Simpson as General Partner, Simpson Family Partnership, Ltd. He is personally known to me or has produced _____ as identification.

Notary Seal MARY A. LUDWIG Commission # GG 203941 Expires April 16, 2022 Bonded Thru Troy Fain Insurance 800-385-7019

Mary Ludwig
Notary Signature
Mary A. Ludwig

ATTACHMENT #1

February 3, 2022

One Oak Development, LLC
ATTN: Andy Hawkins
907 South Ft. Harrison Ave., Ste. 102
Clearwater, Florida 33756

Re: Owner's Authorization for Utility Line Connection

Dear Mr. Hawkins:

As you are aware, Cornerstone Corporation ("Cornerstone") and Simpson Family Partnership, Ltd. ("Simpson") own and operate certain water, sewer, and other utility lines installed in or on properties owned by Cornerstone and Simpson in the Sandy Ridge Crossing and Sandy Ridge Village developments in Mount Dora, Florida. This letter shall confirm that One Oak Development, LLC ("One Oak"), is hereby authorized, to establish a connection to any such utility lines, provided that One Oak pays for all costs and expenses associated with the connection, including any necessary alterations or modifications to the lines.

Please do not hesitate to contact me if you have any questions or need further assistance or information.

Sincerely,

Robert L. Simpson,
President of Cornerstone Corporation
General Partner of Simpson Family Partnership, Ltd.

ATTACHMENT #1

STONE & GERKEN, P.A.
ATTORNEYS AT LAW

4850 N. Highway 19A
Mount Dora, Florida 32757
(352) 357-0330
Main Office Fax (352) 357-2474
Lakeside Office Fax (352) 357-5445

LEWIS W. STONE
SCOTT A. GERKEN
KATRINA THOMAS STONE

KEVIN M. STONE
W. GRANT WATSON
FRANCHESKA SABATINI

March 2, 2022

Planning and Development Department
City of Mount Dora
Attn: Vince Sandersfeld
510 North Baker Road
Mount Dora, FL 32757

Re: Andy Hawkins, One Oak Development, LLC
Culvers – Mount Dora
Site Plan No. SP 22-01
Title Opinion

Dear Mr. Sandersfeld:

I am an attorney licensed to practice in the State of Florida and I have examined title to the following property:

A portion of Lot 2, Sandy Ridge Village, according to the map or plat thereof as recorded in Plat Book 49, Page 98, Public Records of Lake County, Florida, being more particularly described as follows:

Commence at the Northwest corner of said Lot 2; Thence along the North line of said Lot 2, South 89°57'29" East, 270.00 feet; Thence departing the North line of said Lot 2, along the West line of said Lot 1 of said Sandy Ridge Village, South 00°14'59" East, 257.84 feet to the Southwest corner of said Lot 1; Thence departing said West line, North 89°57'29" West, 270.00 feet to a point on the West line of aforesaid Lot 2; Thence along the West line of said Lot 2, 257.84 feet to the Point of Beginning.

Parcel No. 20-19-27-1900-000-00200

evidenced by a title search report from Attorney's Title Fund Services, LLC which covers all public records on file in Lake County up to and including February 8, 2022, at 11:00 p.m.

Based solely upon my examination of the foregoing, and assuming the accuracy of the information contained therein, it is our opinion that:

ATTACHMENT #1

The record title to the above-described property is vested in Simpson Family Partnership, Ltd., a Florida limited partnership, by Special Warranty Deed from Howard James Simpson, Sr., Robert L. Simpson, and Howard J. Simpson, Jr. to Simpson Family Partnership, Ltd., dated December 30th, 1992, and recorded January 12, 1993 in Official Records Book 1205, Page 0651, Public Records of Lake County, Florida (copy of which is attached hereto).

Said record titleholder has a fee simple title thereto, however, subject to the following encumbrances or qualifications:

1. Taxes: For the year 2022 and subsequent years.

2. All matters contained on the Plat of Sandy Ridge Village, as recorded in Plat Book 49, Page 98, Public Records of Lake County, Florida.

3. Easement recorded in O.R. Book 1183, Page 1550, as modified in O.R. Book 2033, Page 1336, Public Records of Lake County, Florida.

4. Easement recorded in O.R. Book 1304, Page 2067, Public Records of Lake County, Florida.

5. Declaration and Grant of Easements recorded in O.R. Book 2033, Page 1351, Public Records of Lake County, Florida.

6. Lease recorded in O.R. Book 4940, Page 2240, Public Records of Lake County, Florida.

7. Boundary Line Agreement recorded in O.R. Book 4988, Page 2322, Public Records of Lake County, Florida.

THIS TITLE INFORMATION IS FURNISHED WITH THE UNDERSTANDING THAT OUR LIABILITY IS LIMITED TO THE AMOUNT PAID FOR THE SERVICE, AND THAT THE INFORMATION CONTAINED HEREIN DOES NOT CONSTITUTE TITLE INSURANCE IN ANY FORM.

Respectfully submitted,

Scott A. Gerken

SAG/mal
Enclosures

ATTACHMENT #1

This Instrument Prepared By:
STANLEY A. GRAVENMIER, ESQ.
DEAN, MEAD, EGERTON, BLOODWORTH,
CAPOUANO & BOZARTH, P.A.
Post Office Box 2346
Orlando, Florida 32802-2346
(407) 841-1200

REC 25.00 RECEIVED FOR
TF 3.50 EXCISE TAXES
DOC 2800.00 JAMES C. WATKINS
INT CLERK LAKE CO FL
BY D.C.

93 1704

TAX PARCEL IDENTIFICATION NO.

20-19-27-0002-000-007	20-19-27-0002-000-010
20-19-27-0002-000-006	20-19-27-0004-000-016
20-19-27-0001-000-005	19-19-27-0600-00J-000
20-19-27-0001-000-004	19-19-27-0600-00I-000
20-19-27-0001-000-003	29-19-27-0002-000-084
20-19-27-0003-000-014	29-19-27-0002-000-078
20-19-27-0004-000-015	29-17-27-0002-000-080

SPECIAL WARRANTY DEED

BOOK 1205 PAGE 0651

THIS SPECIAL WARRANTY DEED is made the 30th day of December, 1992, by HOWARD JAMES SIMPSON, SR., ROBERT L. SIMPSON, and HOWARD J. SIMPSON, JR. whose collective post office address is 445 Limit Avenue, Mount Dora, Florida 32757 (hereinafter collectively referred to as the "Grantors"), to SIMPSON FAMILY PARTNERSHIP LTD., a Florida limited partnership, whose post office address is 445 Limit Avenue, Mount Dora, Florida 32757 (hereinafter referred to as the "Grantee").

JAN 12 12 53 PM '93

(wherever used herein the terms "Grantors" and "Grantee" include all the parties to this instrument and the heirs, legal representatives and assigns of individuals, and the successors and assigns of trustees, partnerships and corporations)

WITNESSETH:

That Grantors, for and in consideration of the sum of Ten Dollars ($10.00) and other valuable considerations, the receipt and sufficiency of which is hereby acknowledged, hereby grant, bargain, sell, alien, remise, release, convey and confirm unto Grantee, all of Grantors' right, title and interest in and to that certain real property situate, lying and being in Lake County, Florida (hereinafter referred to as the "Property"), and being more particularly described in Exhibit "A", attached hereto and made a part hereof.

TOGETHER with all of the tenements, hereditaments and appurtenances thereto belonging or in anywise appertaining.

TO HAVE AND TO HOLD the same in fee simple forever.

AND Grantors hereby covenant with Grantee that Grantors are lawfully seized of the Property in fee simple; that the Grantors have good right and lawful authority to sell and convey the Property, and hereby warrant the title to the Property and will defend the same against the lawful claims of all persons claiming by, through or under the Grantors, but against no others. This conveyance is subject to taxes accruing subsequent to December 31, 1992, and to easements, restrictions, agreements, conditions, limitations, reservations and matters of record, if any, but this reference to the foregoing shall not operate to reimpose the same.

Grantors certify that on the date of execution, delivery and recordation of this instrument, neither Grantors nor any member of Grantors' families resided upon any portion of the Property, or any property contiguous thereto. The Property is not the constitutional homestead of the Grantors.

The scrivener of this instrument has not examined title to the Property, has utilized legal descriptions provided by Grantors, and has relied upon the representations of the Grantors that they are the holders of title to the Property. Accordingly, the scrivener disclaims any liability or responsibility which may result from the failure of the Grantors to hold such title in the manner represented.

IN WITNESS WHEREOF, the persons named herein as "Grantors" have executed and delivered this instrument and have intended the same to be and become effective as of the day and year first above written.

BOOK 1205 PAGE 0652

Signed, sealed and delivered in the presence of:

Print Name: Charles H. Egerton
Print Name: Barbara L. Hutchins

HOWARD JAMES SIMPSON, SR.

Print Name: Charles H. Egerton
Print Name: Barbara L. Hutchins

ROBERT L. SIMPSON

Print Name: Charles H. Egerton
Print Name: Barbara L. Hutchins

HOWARD J. SIMPSON, JR.

STATE OF FLORIDA

COUNTY OF Orange

The foregoing instrument was acknowledged before me this 30 day of December, 1992, by HOWARD JAMES SIMPSON, SR., who (check one) ☐ is personally known to me, ☒ produced a driver's license (issued by a state of the United States within the last five (5) years) as identification, or ☐ produced other identification, to wit: _____, and did not take an oath.

Print Name: _____
Notary Public, State of Florida
Commission No.: _____
My Commission Expires: _____

BARBARA L. HUTCHINS
Notary Public, State of Florida
My Comm. expires June 2, 1993
Comm. No. AA672524

ATTACHMENT #1

STATE OF FLORIDA

COUNTY OF Orange

The foregoing instrument was acknowledged before me this 30 day of December, 1992, by ROBERT L. SIMPSON, who (check one) ☐ is personally known to me, ☑ produced a driver's license (issued by a state of the United States within the last five (5) years) as identification, or ☐ produced other identification, to wit: _____, and did not take an oath.

Barbara L. Hutchins
Print Name: _____
Notary Public, State of Florida
Commission No.: _____
My Commission Expires: _____

BARBARA L. HUTCHINS
Notary Public, State of Florida
My Comm. expires June 2, 1993
Comm. No. AA672524

BOOK 1205 PAGE 0653

STATE OF FLORIDA

COUNTY OF Orange

The foregoing instrument was acknowledged before me this 30 day of December, 1992, by HOWARD J. SIMPSON, JR., who (check one) ☐ is personally known to me, ☑ produced a driver's license (issued by a state of the United States within the last five (5) years) as identification, or ☐ produced other identification, to wit: _____, and did not take an oath.

Barbara L. Hutchins
Print Name: _____
Notary Public, State of Florida
Commission No.: _____
My Commission Expires: _____

BARBARA L. HUTCHINS
Notary Public, State of Florida
My Comm. expires June 2, 1993
Comm. No. AA672524

F:\RE\SAG\SIMPSON.10B

ATTACHMENT #1

EXHIBIT A

BOOK 1205 PAGE 0654

PARCEL #1

Parcel #1 is that portion of Section 20, Township 19 South, Range 27 East described as follows:
From the intersection of the West line of the East ½ of the Southwest ¼ of the Northwest ¼ of Section 20, Township 19 South, Range 27 East, and the Northerly right of way line of Highway 441, run Easterly along the Northerly right of way of said Highway 87 feet to the Point of Beginning (P.O.B.); thence run North 6°29' East 568.5 feet; thence run North 12°19' East 860 feet; thence run West parallel with the North line of Section 20 to a point on the West line of the East ½ of the Northwest ¼ of the Northwest ¼ of Section 20; thence run North along said West line 495 feet, more or less, to the North line of Section 20; thence run Easterly along the North line of Section 20 to a point on the East line of the West ½ of the Northwest ¼ of the Northeast ¼ of Section 20; thence run Southerly along said East line of the West ½ of the Northwest ¼ of the Northeast ¼ of Section 20 to the point where said East line intersects with the Westerly extention of the Southerly line of Lot 93 of The Country Club of Mount Dora Unit II recorded in Lake County in Plat Book 32, pages 42 to 44; thence South 42° 36'45" East along the Westerly extention of and the Southerly line of said Lot 93, 336.37 feet; thence South 3°21' West 1319.06 feet to the South line of the Northeast ¼ of Section 20, thence run Westerly along said South line 202 feet, more or less, to the Southwest corner of the East ½ of the Southwest ¼ of the Northeast ¼ of Section 20, thence run Southerly along the West line of the East ½ of the Northwest ¼ of the Southeast ¼ of Section 20 to the Northeasterly right of way line of Highway 441; thence run Northwesterly along said Northeasterly right of way to the P.O.B.

PARCEL #2

"Begin at the intersection of the West line of the Northwest ¼ of Section 20, Township 19 South, Range 27 East and the Southerly right of way line of Highway 441, thence run Southerly along said West line of the Northwest ¼ of Section 20 to the Southwest corner of the Northwest ¼ of Section 20, thence run Easterly along the South line of the Northwest ¼ of Section 20 to the Southeast corner of the West ½ of the Northwest ¼ of Section 20; thence run Southerly along the West line of the Northeast ¼ of the Southwest ¼ to the Southwest corner of the Northeast ¼ of the Southwest ¼ of Section 20; thence run Easterly along the South line of the Northeast ¼ of the Southwest ¼ of Section 20 to a point on said South line that is 178.61 feet West of the East line of the Southwest ¼ of Section 20; thence run Southerly parallel with said East line of the Southwest ¼ of Section 20 to a point that is 850 feet North of the South line of Section 20 and 178.61 feet West of the East line of the Southwest ¼ of Section 20; thence run North 89°54' East a distance of 268.59 feet; thence run North 49°37' East 658.44 feet, more or less, to the Southwesterly right of way line of Highway 441; thence run Northwesterly and Westerly along said Southerly right of way to the Point of Beginning (P.O.B.).

Subject to cross easement for ingress and egress, utilities and drainage purposes recorded in ORB 1183 page 1550, Public Records of Lake County, Florida, described as follows:
"Commence at the Southeast corner of the Northeast ¼ of Section 19, Township 19 South, Range 27 East, run North 02°55'30" West along the East line of the Northeast ¼ of Section 19 a distance of 492.89 feet to the P.O.B.; thence run North 02°55'30" West along said East line 75 feet to a point on the Southerly right of way of Highway 441; thence run North 87°22'00" East along said Southerly right of way a distance of 389.87 feet; thence departing said Southerly right of way for Highway 441, run South 02°38'00" East 75 feet; thence run South 87°22'00" West 389.49 feet to the P.O.B."

MEMO: Legibility of writing, typing or printing unsatisfactory in this document when microfilmed.

PARCEL #3
"Commence at the Southwest corner of the Southeast ¼ of Section 20, Township 19 South, Range 27 East, thence run South 89°55'15" West along the South line of said Southwest ¼ of Section 20 a distance of 178.61 feet; thence run North 01°56'15" East along the West line of the East 178.61 feet of the Southeast ¼ of the Southwest ¼ a distance of 850 feet; thence run North 89°54' East a distance of 268.59 feet; thence run North 49°37' East 658.44 feet to the Southerly right of way of Highway 441; thence run South 40°23' East a distance of 150 feet to the Point of Beginning (P.O.B.). From the P.O.B., run South 49°37' West a distance of 300 feet; thence run South 40°23' East a distance of 821.24 feet; thence run South 0°6'East 340.36 feet to the South line of the Southeast ¼ of Section 20, a point herein being designated as Point "A". Return to the P.O.B., thence run Southerly along the Southwesterly right of way line of Highway 441 to the South line of the Southeast ¼ of Section 20; thence run Westerly along the South line of the Southeast ¼ of Section 20 to Point "A". Less portion in right of way for Limit Street.

PARCEL #4
Known as Tract J of Sunset Heights Subdivision, Mount Dora, Florida recorded in Plat Book 3, page 34 in the Public Records of Lake County, Florida and further described as follows:
"From the East ¼ corner of Section 19, Township 19 South, Range 27 East, thence run South 06°08'45" West along the East line of the Northeast ¼ of the Northeast ¼ of the Southeast ¼ of Section 19, a distance of 642.33 feet to the Southeast corner of the Northeast ¼ of the Northeast ¼ of the Southeast ¼ of said Section 19 to the Point of Beginning (P.O.B.) of this description; thence run North 89°52'46" West 640.86 feet to a point on the Easterly right of way line of Donnelly Street; thence run Southerly along said Easterly right of way to the North line of the Southeast ¼ of the Southeast ¼ of Section 19; thence run Easterly along said North line of the Southeast ¼ of the Southeast ¼ of Section 19 to the Southeast corner of the Northeast ¼ of the Southeast ¼ of Section 19; thence run Northerly along the East line of the Northeast ¼ of the Southeast ¼ of Section 19 to the P.O.B.; subject to all legal highways or platted rights of way not previously vacated."

PARCEL #5
"Being a parcel of land lying in the Southeast ¼ of Section 19, Township 19 South, Range 27 East, Lake County, Florida and being further bounded and described as follows:

"Commence at the Northeast corner of the Southeast ¼ of Section 19; thence run North 89°51'15" West along the North line of said Southeast ¼, a distance of 688.31 feet to a concrete monument lying on the Westerly right of way line of Donnelly Street; thence South 11°40'13" West along said Westerly right of way line, a distance of 453.03 feet to a Point of Curvature, said curve being concave to the East, having a radius of 1960.08 feet, a central angle of 5°47'00", a chord of 197.76 and a chord bearing of South 8°46'43" West; thence along said curve an arc distance of 197.85 feet to the Point of Beginning (P.O.B.); thence continuing along said curve, said curve having a central angle of 00°21'00", a chord of 11.97 feet, a chord bearing of South 05°41'16" West, thence along said curve an arc distance of 11.97 feet to the Point of Tangency; thence continuing along said right of way line South 05°30'46" West a distance of 630.08 feet; thence North 89°59'50" West along the Southerly boundary line of the Southwest ¼, Northeast ¼, Southeast ¼ of said Section 19 a distance of 620.09 feet. Thence run North 04°21'56" East a distance of 642.22 feet to a Point on the North line of the Southwest ¼ of the Northeast ¼ of the Southeast ¼; thence run South 89°53'01" East 632.92 feet to the P.O.B."

MEMO: Legibility of writing, typing or printing unsatisfactory in this document when microfilmed.

PARCEL #6
Commence at the Northwest corner of Section 29, Township 19 South, Range 27 East, run Southerly along the West line of Section 29 a distance of 330 feet to the Point of Beginning (P.O.B.); thence continue Southerly along the West section line of Section 29 a distance of 965 feet, more or less, to the Northerly right of way line of Pine Avenue; thence run Easterly along the Northerly right of way line a distance of 635 feet, more or less, to the Westerly right of way of Grandview Street; thence run Northerly along the said Westerly right of way 965 feet, more or less, to a point that is 330 feet South of the North line of Section 29; thence run Easterly parallel with the North line of Section 29, 635 feet, more or less, to the P.O.B.

PARCEL #7
A parcel being a portion of the Northwest ¼ of the Northwest ¼ of Section 29, Township 19 South, Range 27 East described as follows:
Begin at the intersection of the Northerly right of way of Pine Street and the Easterly right of way of Grandview Street, a Point being 25 feet North of and 25 feet East of the Southwest corner of the East ½ of the Northwest ¼ of the Northwest ¼ of Section 29, Township 19 South, Range 27 East; thence run Westerly along the Northerly right of way of Pine Street 635 feet, more or less, to a point on the East line of the Northwest ¼ of the Northwest ¼ and 25 feet North of the Southeast corner of the Northwest ¼ of the Northwest ¼ of Section 29; thence run North along the East line of the Northwest ¼ of the Northwest ¼ of Section 29, a distance of 1085 feet, more or less, to a point that is 210 feet South of the North line of Section 29; thence run Westerly parallel with said North line of Section 29 a distance of 210 feet; thence run Northerly parallel with the Easterly right of way of Grandview Street a distance of 185 feet, more or less, to the Southerly right of way of Limit Street; thence Westerly along said Southerly right of way a distance of 168.94 feet; thence run Southerly parallel to the Easterly right of way line of Grandview Street a distance of 195 feet; thence run Weseterly parallel with the North line of Section 29, a distance of 135 feet, more or less, to a point being 121.06 feet East of the Westerly right of way of Grandview Street; thence run Southerly parallel to said Westerly right of way a distance of 12 feet; thence run Easterly parallel with the North Section line 153.94 feet; thence run Southerly parallel with the right of way for Grandview Street a distance of 294 feet'; thence run Westerly parallel to the North line of Section, a distance of 275 feet, more or less, to the Easterly right of way of Grandview Street; thence Southerly along said Easterly right of way a distance of 769 feet, more or less, to the P.O.B.

MEMO: Legibility of writing, typing or printing unsatisfactory in this document when microfilmed.

SECTION 20, TOWNSHIP 19 SOUTH, RANGE 27 EAST
LAKE COUNTY, FLORIDA

ATTACHMENT #1

1" = 20'

0' 20 40
GRAPHIC SCALE

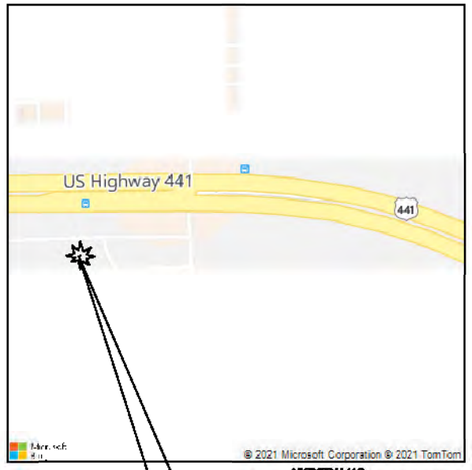

VICINITY MAP
N.T.S.

SUBJECT SITE

LEGEND & ABBREVIATIONS

CB CALCULATED BENCHMARK	UGE UNDERGROUND ENERGY	UCM UNDERGROUND CABLE MARKER
R/W RIGHT OF WAY MONUMENT	TP TELEPHONE PEDESTAL	SIGNAL SIGNALS
CONC. CONCRETE	UGP UNDERGROUND PHONE	WM WATER METER
EP EDGE OF PAVEMENT	MB MAILBOX	WV WATER VALVE
MULT. MULTIPLE	SIGN SIGNS	FCIR FOUND CAPPED IRON ROD
CB CURB BELOW	UGTV UNDERGROUND TV	FIR FOUND IRON ROD
CE CURB ELEV	UGL UNDERGROUND ELEC	FC FOUND CROSS
SMH SANITARY MANHOLE	UGT UNDERGROUND TELE	FCM FOUND CONCRETE MONUMENT
STMH STORM MANHOLE	OHP OVERHEAD PHONE	PM PLAT MONUMENT
	UGG UNDERGROUND GAS	FM FIELD MONUMENT
FLAG POLE	TOS TOE OF SLOPE	N.G.V. NO CORNER FOUND
	WOF WOOD FENCE	
BRONZE VENT MANHOLE	PVCF PLASTIC PRIVACY FENCE	SIGN WOOD
HYDRANT	UG UNDERGROUND	
PERMANENT WOOD	E.O.W. EDGE OF WATER	W MONITOR WELL
METAL LAMPPOLE	LE LICENSED SURVEYOR	SIGNAL SIGNAL SUPPORT POLE
ELEVATOR	OHW OVERHEAD WIRE	
STORM MANHOLE	TRANSFORMER PAD	IRRIGATION CONTROL VALVE
GAS VALVE	TYP. TYPICAL	
UNDERGROUND ELECTRIC	TOB TOP OF BANK	IRRIGATION VALVE(BELOW)
UNDERGROUND TRAFFIC MARKER	GRADE GRADE SIGNAL	POB POINT OF BEGINNING
DECORATIVE LIGHT POLE	WELL	POC POINT OF COMMENCEMENT
EDGE LIGHT POLE	UNDERGROUND TV	
	ELECTRIC BOX	
WOOD POWER POLE	TRAFFIC BOX	
CONC POWER POLE	PARKING BOX	UNDERGROUND PARKING MARKER
FALCON H-FR GATE	CABLE BOX	RAILROAD LINE
	ELECTRIC MANHOLE	P.U.E. PUBLIC UTILITY EASEMENT
	FIRE DEPARTMENT CONNECTION	D.E. DRAINAGE EASEMENT

TREE LEGEND

18"	ONE TREE AND SIZE
6"	MISCELLANEOUS TREE AND SIZE
12"	PALM TREE AND SIZE
6"	PINE TREE AND SIZE

LEGAL DESCRIPTION:

LOT 2, SANDY RIDGE VILLAGE, ACCORDING TO THE MAP OR PLAT THEREOF AS RECORDED IN PLAT BOOK 48, PAGE 68, PUBLIC RECORDS OF LAKE COUNTY, FLORIDA, BEING MORE PARTICULARLY DESCRIBED AS FOLLOWS:

COMMENCE AT THE NORTHWEST CORNER OF SAID LOT 2; THENCE ALONG THE NORTH LINE OF SAID LOT 2, S 89°57'29" E, 270.00 FEET; THENCE DEPARTING THE NORTH LINE OF SAID LOT 2, ALONG THE WEST LINE OF LOT 1 OF SAID SANDY RIDGE VILLAGE, S 00°14'59" E, 257.84 FEET; THENCE ALONG THE SOUTH LINE OF SAID LOT 1, S 89°57'29" E, 200.00 FEET; THENCE ALONG THE EAST LINE OF SAID LOT 2, S 00°14'59" E, 255.78 FEET; THENCE ALONG THE SOUTH LINE OF SAID LOT 2, S 89°31'32" W, 469.56 FEET TO THE WEST 1/4 CORNER OF SECTION 20, TOWNSHIP 19 SOUTH, RANGE 27 EAST, LAKE COUNTY, FLORIDA; THENCE ALONG THE WEST LINE OF SAID LOT 2, N 00°14'59" W, 512.89 FEET TO THE POINT OF BEGINNING.

SAID PARCEL CONTAINING 4.32 ACRES, MORE OR LESS

SURVEYOR'S NOTES:

1) THIS IS AN ALTA/BOUNDARY, TOPOGRAPHIC SURVEY OF THE ABOVE DESCRIBED TRACT OF LAND ONLY, MADE ON THE GROUND UNDER THE SUPERVISION OF A FLORIDA REGISTERED LAND SURVEYOR AND MAPPER, AND EXCEEDS THE MINIMUM TECHNICAL STANDARD FOR HORIZONTAL AND VERTICAL ACCURACY FOR THIS PROPERTY'S EXPECTED USE.

2) BEARINGS REFERENCED TO THE NORTH LINE OF LOT 2 DEPICTED HEREON AS BEING S 89°57'29" E, PER GEODETIC BEARINGS, ZONE EAST, N.A.D. 83.

3) THIS SURVEY WAS CONDUCTED FOR THE PURPOSE OF AN ALTA/BOUNDARY, TOPOGRAPHIC SURVEY, AND IS NOT INTENDED TO DELINEATE THE REGULATORY JURISDICTION OF ANY FEDERAL, STATE, REGIONAL OR LOCAL AGENCY, BOARD, COMMISSION OR OTHER SIMILAR ENTITY.

4) SURVEYOR RELIED ENTIRELY UPON THE TITLE COMMITMENT PREPARED BY OLD REPUBLIC NATIONAL TITLE INSURANCE COMPANY, COMMITMENT NO. 1121581, DATED 07-15-2021 AT 11:00 P.M. THERE MAY BE OTHER EASEMENTS, RIGHTS-OF-WAY, SECTION LINES, AGREEMENTS, RESERVATIONS, RESTRICTIONS, OR OTHER SIMILAR MATTERS OF PUBLIC RECORD, NOT DEPICTED ON THIS SURVEY. THE SURVEY IS SUBJECT TO THE FOLLOWING ITEMS LISTED IN SCHEDULE B-II OF THE REFERENCED COMMITMENT:

ITEMS 1-4: NOTHING APPLICABLE/PLOTTABLE AS TO MATTERS OF SURVEY.

ITEM 5: ALL MATTERS CONTAINED ON THE PLAT OF SANDY RIDGE VILLAGE, AS RECORDED IN P.B. 48, PAGE 68, PUBLIC RECORDS OF LAKE COUNTY, FLORIDA. (DEPICTED HEREON)

ITEM 6: EASEMENT RECORDED IN O.R. BOOK 1153, PAGE 1520, AS MODIFIED IN O.R. BOOK 2033, PAGE 1338, PUBLIC RECORDS OF LAKE COUNTY, FLORIDA. (DEPICTED HEREON)

ITEM 7: EASEMENT RECORDED IN O.R. BOOK 1304, PAGE 2287, PUBLIC RECORDS OF LAKE COUNTY, FLORIDA. (DEPICTED HEREON)

ITEM 8: DECLARATION AND GRANT OF EASEMENTS RECORDED IN O.R. BOOK 2033, PAGE 1391, PUBLIC RECORDS OF LAKE COUNTY, FLORIDA. (PLOTTABLE EASEMENTS DEPICTED HEREON. THERE ARE BLANKET EASEMENTS INFERRED, BUT NOT PLOTTABLE. THE DRAINAGE EASEMENT IS DIFFERENT THAN PLATTED, BUT THIS SURVEYOR DID NOT FIND WHERE IT WAS VACATED BY THE PLAT, THEREFORE BOTH ARE SHOWN)

ITEM 9: LEASE RECORDED IN O.R. BOOK 4940, PAGE 2240, PUBLIC RECORDS OF LAKE COUNTY, FLORIDA. (NO PLOTTABLE EASEMENTS)

ITEM 10: BOUNDARY LINE AGREEMENT RECORDED IN O.R. BOOK 4988, PAGE 2128, PUBLIC RECORDS OF LAKE COUNTY, FLORIDA. (DEPICTED HEREON)

ITEM 11: NOTHING APPLICABLE/PLOTTABLE AS TO MATTERS OF SURVEY.

5) NO UNDERGROUND UTILITIES, UNDERGROUND ENCROACHMENTS, BUILDING FOUNDATIONS WERE OBSERVED AS A PART OF THIS SURVEY, UNLESS OTHERWISE SHOWN. SPRINKS WERE NOT LOCATED, UNLESS OTHERWISE SHOWN.

6) THIS SURVEY NOT VALID WITHOUT THE SIGNATURE AND THE ORIGINAL RAISED SEAL OF A FLORIDA LICENSED SURVEYOR AND MAPPER.

7) THE PARCEL SHOWN HEREON APPEARS TO FALL WITHIN FLOOD ZONE "X", AS SHOWN ON THE FLOOD INSURANCE RATE MAP LOCATED, COMMUNITY PANEL NUMBER 0359 E, MAP REVISED 12-18-2012.

8) ELEVATIONS DEPICTED HEREON BASED UPON NGS CONTROL POINT "T1 91 GPS 8", ELEVATION 171.71' (N.A.V.D. 88). SITE BENCHMARKS DEPICTED HEREON AND ARE IN (N.A.V.D. 88) DATUM.

CERTIFIED TO:
- OLD REPUBLIC NATIONAL TITLE INSURANCE COMPANY
- ONE OAK DEVELOPMENT, LLC
- REPUBLIC BANK & TRUST COMPANY, ISAOA
- ONE OAK MOUNT DORA, LLC
- STONE & GERRON, PA
- MACFARLANE FERGUSON & MCMULLEN

Alan B. Thompson Jr., P.L.S.
State of Florida No. 5116
Registered Land Surveyor and Mapper

Date Signed 7-5-21

Last Date of Field Survey 5-20-21

NOT VALID WITHOUT ALL SHEETS
SEE SHEET 2 AND 3 OF 3 FOR BOUNDARY AND TOPOGRAPHIC INFORMATION

EXTREME SURVEYING OF FLORIDA, INC.
LB No. 7457
20340 RIVOLI PLACE
WESLEY CHAPEL, FLORIDA 33543
PH. (813) 973-0202
FAX. (813) 973-3122
Email: alan@extreme-surveying.com
PROFESSIONAL LAND SURVEYING AND MAPPING SERVICES

REVISIONS

ALTA/BOUNDARY, TOPOGRAPHIC SURVEY

LOT 2
SANDY RIDGE VILLAGE

DESIGNED BY: N/A	
DRAWN BY: AT	
CHECKED BY: ABT	
SCALE: 1"= 20'	DATE: 6-20-21
PARTY CHIEF: ABT	
FIELD BOOK: 71	
PAGE: ---	
CAD FILE: 2108-100-61	
JOB NUMBER: 2108-100-61	
SHEET 1 of 3	

NOT VALID WITHOUT ALL SHEETS
SEE SHEET 1 OF 3 FOR SURVEY NOTES AND LEGAL DESCRIPTION
SEE SHEET 3 OF 3 FOR CONTINUED BOUNDARY AND TOPOGRAPHIC INFORMATION

SECTION 20, TOWNSHIP 19 SOUTH, RANGE 27 EAST
LAKE COUNTY, FLORIDA

1" = 20'
0' 20 40
GRAPHIC SCALE

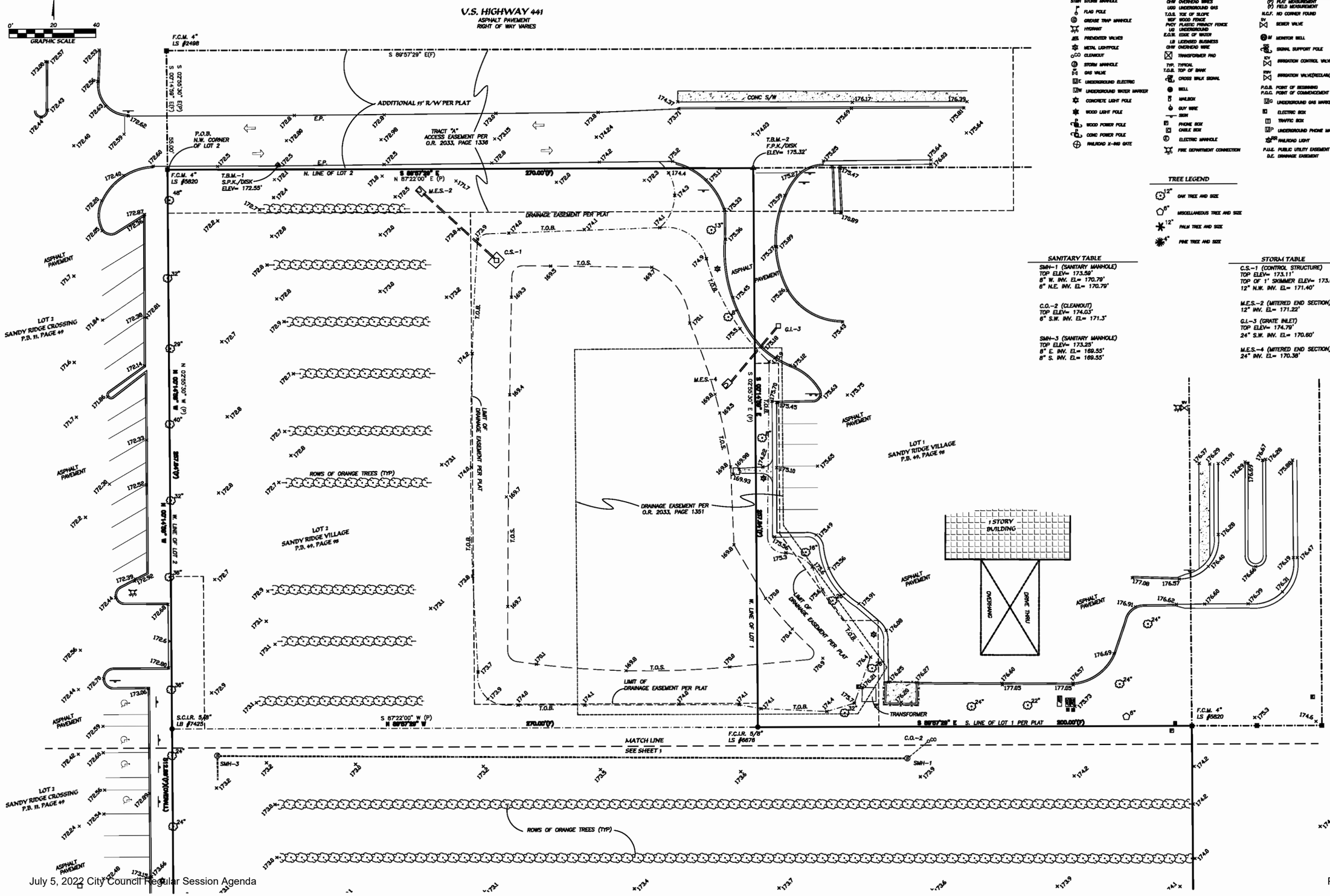

LEGEND & ABBREVIATIONS

(C) CALCULATED MEASUREMENT
(R/W) RIGHT OF WAY MEASUREMENT
CONC. CONCRETE
EP EDGE OF PAVEMENT
MULT. MULTIPLE
CI CURB INLET
GI GRATE INLET
SMH SANITARY MANHOLE
STMH STORM MANHOLE
FLAG POLE
GREASE TRAP MANHOLE
HYDRANT
PREVENTER VALVES
METAL LIGHTPOLE
CO CLEANOUT
STORM MANHOLE
GAS VALVE
UE UNDERGROUND ELECTRIC
UW UNDERGROUND WATER MARKER
CONCRETE LIGHT POLE
WOOD LIGHT POLE
WOOD POWER POLE
CONC POWER POLE
RAILROAD X-ING GATE
USS UNDERGROUND SANITARY
TELEPHONE MANHOLE
UEP UNDERGROUND PHONE
MES MITERED END SECTION
STMH STORM MANHOLE
UGFM UNDERGROUND FORCE MAIN
UGE UNDERGROUND ELECTRIC
UGW UNDERGROUND WATER
OHW OVERHEAD WIRES
UGG UNDERGROUND GAS
T.O.S. TOE OF SLOPE
WDF WOOD FENCE
PVCF PLASTIC PRIVACY FENCE
UG UNDERGROUND
E.O.W. EDGE OF WATER
LB LICENSED BUSINESS
OHW OVERHEAD WIRE
TRANSFORMER PAD
TYP. TYPICAL
T.O.B. TOP OF BANK
CROSS WALK SIGNAL
WELL
MAILBOX
GUY WIRE
SIGN
PHONE BOX
CABLE BOX
ELECTRIC MANHOLE
FIRE DEPARTMENT CONNECTION
UGC UNDERGROUND CABLE MARKER
SANITARY MANHOLE
WATER METER
WATER VALVE
F.C.I.R. FOUND CAPPED IRON ROD
F.N./D. FOUND NAIL & DISK
F.C.M. FOUND CONCRETE MONUMENT
(P) PLAT MEASUREMENT
(F) FIELD MEASUREMENT
N.C.F. NO CORNER FOUND
SEWER VALVE
M MONITOR WELL
SIGNAL SUPPORT POLE
IRRIGATION CONTROL VALVE
IRRIGATION VALVE(RECLAIM)
P.O.B. POINT OF BEGINNING
P.O.C. POINT OF COMMENCEMENT
UGG UNDERGROUND GAS MARKER
ELECTRIC BOX
TRAFFIC BOX
UP UNDERGROUND PHONE MARKER
RR RAILROAD LIGHT
P.U.E. PUBLIC UTILITY EASEMENT
D.E. DRAINAGE EASEMENT

TREE LEGEND

12" OAK TREE AND SIZE
6" MISCELLANEOUS TREE AND SIZE
12" PALM TREE AND SIZE
4" PINE TREE AND SIZE

SANITARY TABLE

SMH-1 (SANITARY MANHOLE)
TOP ELEV= 173.59'
8" W. INV. EL= 170.79'
8" N.E. INV. EL= 170.79'

C.O.-2 (CLEANOUT)
TOP ELEV= 174.03'
6" S.W. INV. EL= 171.3'

SMH-3 (SANITARY MANHOLE)
TOP ELEV= 173.25'
8" E. INV. EL= 169.55'
8" S. INV. EL= 169.55'

STORM TABLE

C.S.-1 (CONTROL STRUCTURE)
TOP ELEV= 173.11'
TOP OF 1' SKIMMER ELEV= 173.60'
12" N.W. INV. EL= 171.40'

M.E.S.-2 (MITERED END SECTION)
12" INV. EL= 171.22'

G.I.-3 (GRATE INLET)
TOP ELEV= 174.79'
24" S.W. INV. EL= 170.60'

M.E.S.-4 (MITERED END SECTION)
24" INV. EL= 170.38'

EXTREME SURVEYING OF FLORIDA, INC.
LB No. 7425
29340 RHODIN PLACE
WESLEY CHAPEL, FLORIDA 33545
PH. (813) 973-2092
FAX. (813) 973-2122
EMail: alex@extreme-surveying.com
PROFESSIONAL SURVEYING AND MAPPING SERVICES

REVISIONS

No.	DESCRIPTION	DATE	BY

ALTA/BOUNDARY, TOPOGRAPHIC SURVEY

LOT 2
SANDY RIDGE VILLAGE

DESIGNED BY:	N/A
DRAWN BY:	AT
CHECKED BY:	ABT
SCALE: 1"= 20'	DATE: 8-20-21
PARTY CHIEF:	ABT
FIELD BOOK:	71
PAGE:	--
CAD FILE:	2108-100-61
JOB NUMBER:	2108-100-61
SHEET	2 of 3

ATTACHMENT #1

NOT VALID WITHOUT ALL SHEETS
SEE SHEET 1 OF 3 FOR SURVEY NOTES AND LEGAL DESCRIPTION
SEE SHEET 2 OF 3 FOR CONTINUED BOUNDARY AND TOPOGRAPHIC INFORMATION

SECTION 20, TOWNSHIP 19 SOUTH, RANGE 27 EAST
LAKE COUNTY, FLORIDA

1" = 20'
0' 20 40
GRAPHIC SCALE

SANITARY TABLE

SMH-1 (SANITARY MANHOLE)
TOP ELEV= 173.59'
8" W. INV. EL= 170.79'
6" N.E. INV. EL= 170.79'

C.O.-2 (CLEANOUT)
TOP ELEV= 174.03'
6" S.W. INV. EL= 171.3'

SMH-3 (SANITARY MANHOLE)
TOP ELEV= 173.25'
8" E. INV. EL= 169.55'
8" S. INV. EL= 169.55'

STORM TABLE

C.S.-1 (CONTROL STRUCTURE)
TOP ELEV= 173.11'
TOP OF 1' SKIMMER ELEV= 173.60'
12" N.W. INV. EL= 171.40'

M.E.S.-2 (MITERED END SECTION)
12" INV. EL= 171.22'

G.I.-3 (GRATE INLET)
TOP ELEV= 174.79'
24" S.W. INV. EL= 170.60'

M.E.S.-4 (MITERED END SECTION)
24" INV. EL= 170.38'

TREE LEGEND

12" OAK TREE AND SIZE
8" MISCELLANEOUS TREE AND SIZE
12" PALM TREE AND SIZE
4" PINE TREE AND SIZE

LEGEND & ABBREVIATIONS

(C) CALCULATED MEASUREMENT
(R/W) RIGHT OF WAY MEASUREMENT
CONC. CONCRETE
EP EDGE OF PAVEMENT
MULT. MULTIPLE
CI CURB INLET
GI GRATE INLET
SMH SANITARY MANHOLE
STMH STORM MANHOLE
FP FLAG POLE
GREASE TRAP MANHOLE
HYDRANT
PREVENTER VALVES
METAL LIGHTPOLE
CO CLEANOUT
STORM MANHOLE
GAS VALVE
UNDERGROUND ELECTRIC
UNDERGROUND WATER MARKER
CONCRETE LIGHT POLE
WOOD LIGHT POLE
WOOD POWER POLE
CONC POWER POLE
RAILROAD X-ING GATE
UGS UNDERGROUND SANITARY
TELEPHONE MANHOLE
UGP UNDERGROUND PHONE
MES MITERED END SECTION
STMH STORM MANHOLE
UGFM UNDERGROUND FORCE MAIN
UGE UNDERGROUND ELECTRIC
UGW UNDERGROUND WATER
OHW OVERHEAD WIRES
UGG UNDERGROUND GAS
T.O.S. TOE OF SLOPE
WOOD FENCE
PVCY PLASTIC PRIVACY FENCE
UG UNDERGROUND
E.O.W. EDGE OF WATER
LB LICENSED BUSINESS
OHW OVERHEAD WIRE
TRANSFORMER PAD
TYP. TYPICAL
T.O.B. TOP OF BANK
CROSS WALK SIGNAL
WELL
MAILBOX
GUY WIRE
SIGN
PHONE BOX
CABLE BOX
ELECTRIC MANHOLE
FIRE DEPARTMENT CONNECTION
UGC UNDERGROUND CABLE MARKER
SANITARY MANHOLE
WATER METER
WATER VALVE
F.C.I.R. FOUND CAPPED IRON ROD
F.N.D. FOUND NAIL & DISK
F.C.M. FOUND CONCRETE MONUMENT
(P) PLAT MEASUREMENT
(F) FIELD MEASUREMENT
N.C.F. NO CORNER FOUND
SV SEWER VALVE
MONITOR WELL
SIGNAL SUPPORT POLE
IRRIGATION CONTROL VALVE
IRRIGATION VALVE(RECLAIM)
P.O.B. POINT OF BEGINNING
P.O.C. POINT OF COMMENCEMENT
UNDERGROUND GAS MARKER
ELECTRIC BOX
TRAFFIC BOX
UNDERGROUND PHONE MARKER
RAILROAD LIGHT
P.U.E. PUBLIC UTILITY EASEMENT
D.E. DRAINAGE EASEMENT

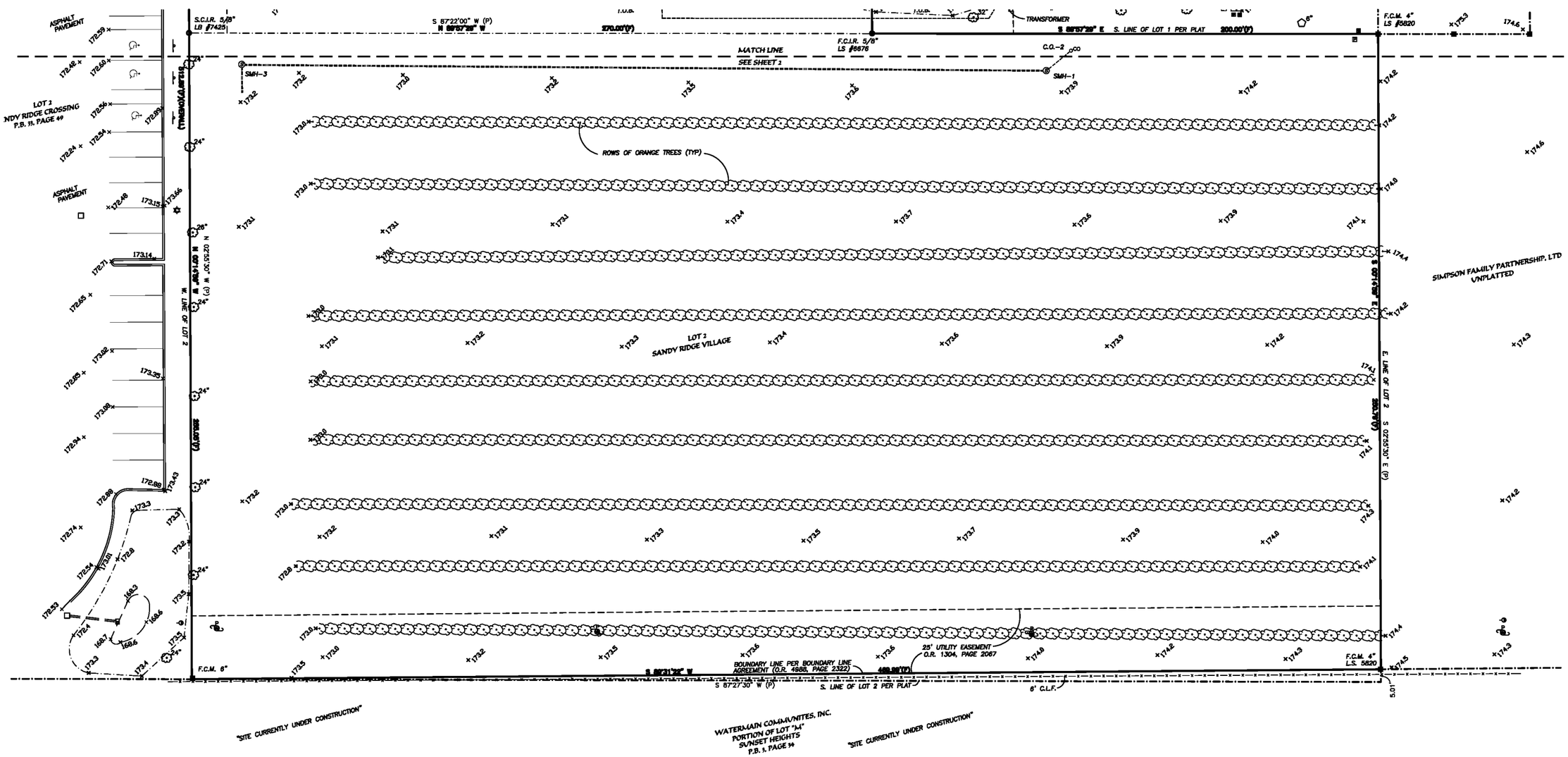

EXTREME SURVEYING OF FLORIDA, INC.
LB No. 7425
29340 RHODIN PLACE
WESLEY CHAPEL, FLORIDA 33545
PH. (813) 973-2092
FAX. (813) 973-2122
EMail: alex@extreme-surveying.com
PROFESSIONAL SURVEYING AND MAPPING SERVICES

EXTREME

No.	REVISIONS	DATE	BY

ALTA/BOUNDARY, TOPOGRAPHIC SURVEY

LOT 2
SANDY RIDGE VILLAGE

DESIGNED BY: N/A	
DRAWN BY: AT	
CHECKED BY: ABT	
SCALE: 1"= 20'	DATE: 8-20-21
PARTY CHIEF: ABT	
FIELD BOOK: 71	
PAGE: --	
CAD FILE: 2108-100-61	
JOB NUMBER: 2108-100-61	
SHEET 3 of 3	

RESOLUTION NO. 2022-22

A RESOLUTION OF THE CITY OF MOUNT DORA, FLORIDA RELATED TO FINAL PLAT ENTITLED "SANDY RIDGE VILLAGE REPLAT"; PROVIDING FOR LEGISLATIVE FINDINGS AND INTENT; PROVIDING FOR APPROVAL OF REPLAT; PROVIDING FOR THE IMPLEMENTATION OF ADMINISTRATIVE ACTIONS; PROVIDING A SAVINGS CLAUSE; PROVIDING FOR SCRIVENER'S ERRORS; PROVIDING FOR CONFLICTS; PROVIDING FOR SEVERABILITY; AND PROVIDING AN EFFECTIVE DATE.

WHEREAS, pursuant to Section 4.3.4 of the City's Land Development Code, Simpson Family Partnership, Ltd. (Property Owner) submitted an application to the City of Mount Dora, for a Final Plat (Replat) entitled "Sandy Ridge Village Replat"; and

WHEREAS, the City Attorney reviewed said Sandy Ridge Village Replat Final Plat (Replat) and found it consistent with controlling Florida law; and

WHEREAS, the City Surveyor reviewed said Sandy Ridge Village Replat Final Plat (Replat), found it compliant with Florida Statutes, Chapter 177, and has executed the same; and

WHEREAS, the Development Review Committee reviewed the Sandy Ridge Village Replat Final Plat (Replat) on March 30, 2022 and again on May 25, 2022, and recommended approval as being compliance with the minimum requirements of the City's Land Development Code and as consistent with the City's Comprehensive Plan and controlling Florida law; and

WHEREAS, the City's Planning and Zoning Commission reviewed the Sandy Ridge Village Replat Final Plat (Replat) on June 15, 2022, and recommended approval as being in compliance with the minimum requirements of the City's Land Development Code and as being consistent with the City's Comprehensive Plan and controlling Florida law; and

WHEREAS, the City of Mount Dora, Florida, finds the Sandy Ridge Village Replat Final Plat (Replat) to be in compliance with the minimum requirements of the City's Land Development Code and consistent with the City's Comprehensive Plan and controlling Florida law.

NOW, THEREFORE BE IT RESOLVED BY THE CITY OF MOUNT DORA, FLORIDA, AS FOLLOWS:

SECTION 1. Legislative Findings and Intent. The City of Mount Dora has complied with all requirements and procedures of Florida law in processing this Resolution. The above recitals are hereby adopted.

SECTION 2. Approval of Final Plat (Replat). The City herby approves the Sandy Ridge Village Replat (Final Plat) attached hereto as **Exhibit "A"**.

SECTION 3. Implementing Administrative Actions. The City Manager is hereby authorized and directed to take such action as may be deemed necessary and appropriate in order to implement the provisions of this Resolution. The City Manager may, as deemed appropriate, necessary and convenient, delegate the powers of implementation as herein set forth to such City employees as deemed effectual and prudent.

SECTION 4. Savings Clause. All prior actions of the City of Mount Dora pertaining to the Sandy Ridge Village Replat Final Plat (Replat) as well as any and all matters relating thereto, are hereby ratified and affirmed consistent with the provisions of this Resolution.

SECTION 5. Scrivener's Errors. Typographical errors and other matters of a similar nature which do not affect the intent of this Resolution, as determined by the City Clerk and City Attorney, may be corrected.

SECTION 6. Conflicts. All Resolutions or parts of Resolutions in conflict with any of the provisions of this Resolution are hereby repealed.

SECTION 7. Severability. If any Section or portion of a Section of this Resolution proves to be invalid, unlawful, or unconstitutional, it shall not be held to invalidate or impair the validity, force, or effect of any other Section or part of this Resolution.

SECTION 8. Effective Date. This Resolution shall become effective immediately upon its passage and adoption.

PASSED AND ADOPTED this _____ day of _____ 2022.

_____
CRISSY STILE
MAYOR of the City of Mount Dora, Florida

ATTEST:

_____
JESSICA BURNHAM
CITY CLERK

For the use and reliance of City of Mount
Dora only. Approved as to form and legality.

_____
Sherry G. Sutphen, City Attorney

Exhibit "A"
Sandy Ridge Village Replat
Final Plat (Replat)

SANDY RIDGE VILLAGE REPLAT

SECTION 20, TOWNSHIP 19 SOUTH, RANGE 27 EAST
A REPLAT OF LOT 2
SANDY RIDGE VILLAGE
PLAT BOOK 49, PAGE 98
CITY OF MOUNT DORA, LAKE COUNTY, FLORIDA

PLAT BOOK: PAGE:

LEGAL DESCRIPTION:

A PORTION LOT 2, SANDY RIDGE VILLAGE, ACCORDING TO THE MAP OR PLAT THEREOF AS RECORDED IN PLAT BOOK 49, PAGE 98, PUBLIC RECORDS OF LAKE COUNTY, FLORIDA, BEING MORE PARTICULARLY DESCRIBED AS FOLLOWS:

BEGINNING AT THE NORTHWEST CORNER OF SAID LOT 2; THENCE ALONG THE NORTH LINE OF SAID LOT 2, S 89°57'29" E, 270.00 FEET; THENCE DEPARTING THE NORTH LINE OF SAID LOT 2, ALONG THE WEST LINE OF LOT 1 OF SAID SANDY RIDGE VILLAGE, S 00°14'59" E, 257.84 FEET; THENCE ALONG THE SOUTH LINE OF SAID LOT 1, S 89°57'29" E, 200.00 FEET; THENCE ALONG THE EAST LINE OF SAID LOT 2, S 00°14'59" E, 250.79 FEET; THENCE ALONG THE SOUTH LINE OF SAID LOT 2, S 89°31'22" W, 469.99 FEET TO THE WEST ¼ CORNER OF SECTION 20, TOWNSHIP 19 SOUTH, RANGE 27 EAST, LAKE COUNTY, FLORIDA; THENCE ALONG THE WEST LINE OF SAID LOT 2, N 00°14'59" W, 512.89 FEET TO THE POINT OF BEGINNING.

SAID PARCEL CONTAINING 4.32 ACRES, MORE OR LESS

SURVEYOR'S NOTES:

1) BEARINGS DEPICTED HEREON ARE BASED UPON THE WEST LINE OF LOT 2 OF SNADY RIDGE VILLAGE, AS BEING N 00°14'59" W, PER FLORIDA STATE PLANE COORDINATE SYSTEM, ZONE EAST.

2) ALL PLATTED UTILITY EASEMENTS SHALL PROVIDE THAT SUCH EASEMENTS SHALL ALSO BE EASEMENTS FOR THE CONSTRUCTION, INSTALLATION, MAINTENANCE, AND OPERATION OF CABLE UTILITY SERVICES; PROVIDED HOWEVER, NO SUCH CONSTRUCTION, INSTALLATION, MAINTENANCE, AND OPERATION OF CABLE TELEVISION SERVICES SHALL INTERFERE WITH THE FACILITIES AND SERVICES OF AN ELECTRIC, TELEPHONE, GAS OR OTHER PUBLIC UTILITY. IN THE EVENT A CABLE TELEVISION COMPANY DAMAGES THE FACILITIES OF A PUBLIC UTILITY, IT SHALL BE SOLELY RESPONSIBLE FOR THE DAMAGES. SUCH CONSTRUCTION, INSTALLATION, MAINTENANCE AND OPERATION SHALL COMPLY WITH THE NATIONAL ELECTRICAL SAFETY CODE AS ADOPTED BY THE FLORIDA PUBLIC SERVICE COMMISSION. (SECTION 177.091 (28), FLORIDA STATUTES).

3) SUBDIVISION PLATS BY NO MEANS REPRESENT A DETERMINATION ON WHETHER PROPERTIES WILL OR WILL NOT FLOOD. LAND WITHIN THE BOUNDARIES OF THIS PLAT MAY OR MAY NOT BE SUBJECT TO FLOODING.

4) ALL CORNERS SHOWN HEREON SHALL BE SET ACCORDING TO CHAPTER 177, PART 1, FLORIDA STATUTES.

5) THE PROPERTY DEPICTED HEREON IS SUBJECT TO MATTERS DEFINED IN THE FIRST AMENDMENT TO DECLARATION AND GRANT OF EASEMENTS AS RECORDED IN OFFICIAL RECORDS BOOK , PAGE , OF THE PUBLIC RECORDS OF LAKE COUNTY, FLORIDA, AND ANY SUPPLEMENTS AND/OR AMENDMENTS THERETO.

6) TRACT "A" IS AN EXISTING INGRESS, EGRESS, UTILITY AND DRAINAGE EASEMENT AS RECORDED IN O.R. BOOK 1183, PAGE 1550, AND MODIFIED BY O.R. BOOK 2033, PAGE 1336, OF THE PUBLIC RECORDS OF LAKE COUNTY, FLORIDA.

7) THE DRAINAGE EASEMENT CREATED VIA THIS PLAT WILL SUPERCEDE THE DRAINAGE EASEMENT DEPICTED ON LOT 2 OF SANDY RIDGE VILLAGE RECORDED IN PLAT BOOK 49, PAGE 98 OF THE PUBLIC RECORDS OF LAKE COUNTY, FLORIDA.

NOTICE: THIS PLAT, AS RECORDED IN ITS GRAPHIC FORM, IS THE OFFICIAL DEPICTION OF THE SUBDIVIDED LANDS DESCRIBED HEREIN AND WILL IN NO CIRCUMSTANCES BE SUPPLANTED IN AUTHORITY BY ANY OTHER GRAPHIC OR DIGITAL FORM OF THE PLAT. THERE MAY BE ADDITIONAL RESTRICTIONS THAT ARE NOT RECORDED ON THIS PLAT THAT MAY BE FOUND IN THE PUBLIC RECORDS OF THIS COUNTY.

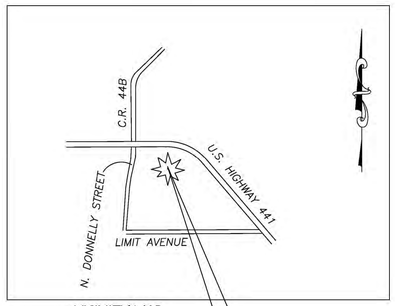

VICINITY MAP
NOT TO SCALE

SUBJECT SITE

EXTREME SURVEYING OF FLORIDA, INC.
LB No. 7425
29340 RHODIN PLACE
WESLEY CHAPEL, FLORIDA 33545
PH. (813) 973-2092
FAX. (813) 973-2122
EMail: alex@extreme-surveying.com

CERTIFICATE OF SURVEYOR AND MAPPER

KNOW ALL BY THESE PRESENTS, THAT THE UNDERSIGNED, BEING A FLORIDA REGISTERED SURVEYOR AND MAPPER THAT THE FOREGOING PLAT WAS PREPARED UNDER HIS DIRECTION AND SUPERVISION; THAT PERMANENT REFERENCE MONUMENTS HAVE BEEN PLACED AND THAT PERMANENT CONTROL POINTS HAVE BEEN OR WILL BE PLACED AS REQUIRED BY ALL STATE AND LOCAL REGULATIONS, AND THAT THE PLAT COMPLIES WITH ALL OF THE SURVEY REQUIREMENTS OF CHAPTER 177, FLORIDA STATUTES: AND THAT SAID LAND IS LOCATED IN SECTION 20, TOWNSHIP 19 SOUTH, RANGE 27 EAST, LAKE COUNTY, FLORIDA.

DATED: _____ SIGNED _____
REGISTRATION NUMBER 5318

ALEX B. THOMPSON, JR.
EXTREME SURVEYING OF FLORIDA, INC.
LB# 7425
29340 RHODIN PLACE
WESLEY CHAPEL, FLORIDA 33545

CERTIFICATE OF APPROVAL BY PLANNING AND ZONING COMMISION

THIS IS TO CERTIFY, THAT ON _____ 2022, THE FOREGOING PLAT WAS APPROVED BY THE BOARD OF PLANNING AND ZONING COMMISION, OF CITY OF MOUNT DORA, LAKE COUNTY, FLORIDA.

_____
CHAIRMAN OF THE BOARD

_____
CLERK OF THE BOARD OF PLANNING AND ZONING

CERTIFICATE OF APPROVAL BY CITY SURVEYOR

I HEREBY CERTIFY THAT THIS PLAT HAS BEEN REVIEWED FOR THE CONFORMITY TO THE REQUIREMENTS OF CHAPTER 177, PART 1 OF FLORIDA STATUTES. NO CONFIRMATION OF MATHEMATICAL CLOSURE OR THE PLACEMENT OF PRM'S AND PCP'S IN THE FIELD WAS MADE IN THIS REVIEW.

_____ _____
BY: RANDALL L. ROBERTS, R.L.S. DATE
FLORIDA REGISTRATION NUMBER 3144
STATE OF FLORIDA

CPH, INC. LB# 7143
500 WEST FULTON STREET
SANFORD, FL 32771

CERTIFICATE OF CITY COUNCIL

THIS IS TO CERTIFY, THAT ON , THE FOREGOING PLAT WAS APPROVED BY THE CITY COUNCIL OF THE CITY OF MOUNT DORA.

_____
MAYOR

_____
PRINTED NAME

_____
CITY CLERK

_____
PRINTED NAME

CERTIFICATE OF APPROVAL BY CLERK OF CIRCUIT COURT RECORDING

I HEREBY CERTIFY, THAT I HAVE EXAMINED THE FOREGOING PLAT AND FIND THAT IT COMPLIES IN FORM WITH ALL OF THE REQUIREMENTS OF CHAPTER 177, FLORIDA STATUTES, AND WAS FILED FOR RECORD ON:

_____ AT _____ FILE NO. _____

_____
CLERK OF THE CIRCUIT COURT
IN AND FOR LAKE COUNTY, FLORIDA

SANDY RIDGE VILLAGE REPLAT

DEDICATION:

KNOW ALL BY THESE PRESENTS, THAT SIMPSON FAMILY PARTNERSHIP, LTD, A FLORIDA LIMITED PARTNERSHIP, BEING THE OWNER IN FEE SIMPLE OF THE LANDS DESCRIBED IN THE FOREGOING CAPTION TO THIS PLAT, HEREBY DEDICATES SAID LANDS AND PLAT FOR THE USES AND PURPOSES THEREIN EXPRESSED. THERE ARE NO DEDICATIONS TO THE PUBLIC.

IN WITNESS WHEREOF, HAS CAUSED THESE PRESENTS TO BE SIGNED AND ATTESTED TO BY THE OFFICERS NAMED BELOW ON THE _____ DAY OF _____ 2022.

BY: _____ _____
GENERAL PARTNER SIGNATURE
SIMPSON FAMILY PARTNERSHIP, LTD.
A FLORIDA LIMITED PARTNERSHIP

ATTEST: _____ _____
PRINTED NAME SIGNATURE

SIGNED IN THE PRESENCE OF:

BY: _____ _____
PRINTED NAME SIGNATURE

BY: _____ _____
PRINTED NAME SIGNATURE

ACKNOWLEDGMENT:

STATE OF FLORIDA, _____

COUNTY OF _____

THE FOREGOING INSTRUMENT WAS ACKNOWLEDGED BEFORE ME, BY THE MEANS OF ( ) PHYSICAL PRESENCE OR ( ) ONLINE NOTORIZATION, THIS_____ DAY OF _____, 2022, BY _____, AS OFFICER DULY AUTHORIZED TO TAKE ACKNOWLEDGEMENTS IN THE STATE AND COUNTY AFORESAID, OF THE ABOVE NAMED PARTNERSHIP, ORGANIZED AND EXISTING UNDER THE LAWS OF THE STATE OF FLORIDA, WHO IS/ARE PERSONALLY KNOWN TO ME OR HAVE PRODUCED THE FOLLOWING IDENTIFICATION _____ _____AND WHO EXECUTED THE FOREGOING DEDICATION AND SEVERALLY ACKNOWLEDGED THE EXECUTION THEREOF TO BE THEIR FREE ACT AND DEED AS SUCH OFFICERS THERETO DULY AUTHORIZED AND THAT SAID DEDICATION IS THE ACT AND DEED OF SAID PARTNERSHIP.

IN WITNESS WHEREOF, I HAVE HERETO SET MY HAND AND SEAL ON THE ABOVE DATE.

NOTARY PUBLIC _____

PRINTED NAME _____

COMMISSION NO. _____

MY COMMISSION EXPIRES: _____

BY: _____ _____
GENERAL PARTNER SIGNATURE
SIMPSON FAMILY PARTNERSHIP, LTD.
A FLORIDA LIMITED PARTNERSHIP

ATTEST: _____ _____
PRINTED NAME SIGNATURE

SIGNED IN THE PRESENCE OF:

BY: _____ _____
PRINTED NAME SIGNATURE

BY: _____ _____
PRINTED NAME SIGNATURE

ACKNOWLEDGMENT:

STATE OF FLORIDA, _____

COUNTY OF _____

THE FOREGOING INSTRUMENT WAS ACKNOWLEDGED BEFORE ME, BY THE MEANS OF ( ) PHYSICAL PRESENCE OR ( ) ONLINE NOTORIZATION, THIS_____ DAY OF _____, 2022, BY _____, AS OFFICER DULY AUTHORIZED TO TAKE ACKNOWLEDGEMENTS IN THE STATE AND COUNTY AFORESAID, OF THE ABOVE NAMED PARTNERSHIP, ORGANIZED AND EXISTING UNDER THE LAWS OF THE STATE OF FLORIDA, WHO IS/ARE PERSONALLY KNOWN TO ME OR HAVE PRODUCED THE FOLLOWING IDENTIFICATION _____ _____AND WHO EXECUTED THE FOREGOING DEDICATION AND SEVERALLY ACKNOWLEDGED THE EXECUTION THEREOF TO BE THEIR FREE ACT AND DEED AS SUCH OFFICERS THERETO DULY AUTHORIZED AND THAT SAID DEDICATION IS THE ACT AND DEED OF SAID PARTNERSHIP.

IN WITNESS WHEREOF, I HAVE HERETO SET MY HAND AND SEAL ON THE ABOVE DATE.

NOTARY PUBLIC _____

PRINTED NAME _____

COMMISSION NO. _____

MY COMMISSION EXPIRES: _____

SANDY RIDGE VILLAGE REPLAT

SECTION 20, TOWNSHIP 19 SOUTH, RANGE 27 EAST
A REPLAT OF LOT 2
SANDY RIDGE VILLAGE
PLAT BOOK 49, PAGE 98
CITY OF MOUNT DORA, LAKE COUNTY, FLORIDA

1" = 40'

0' 40 80
GRAPHIC SCALE

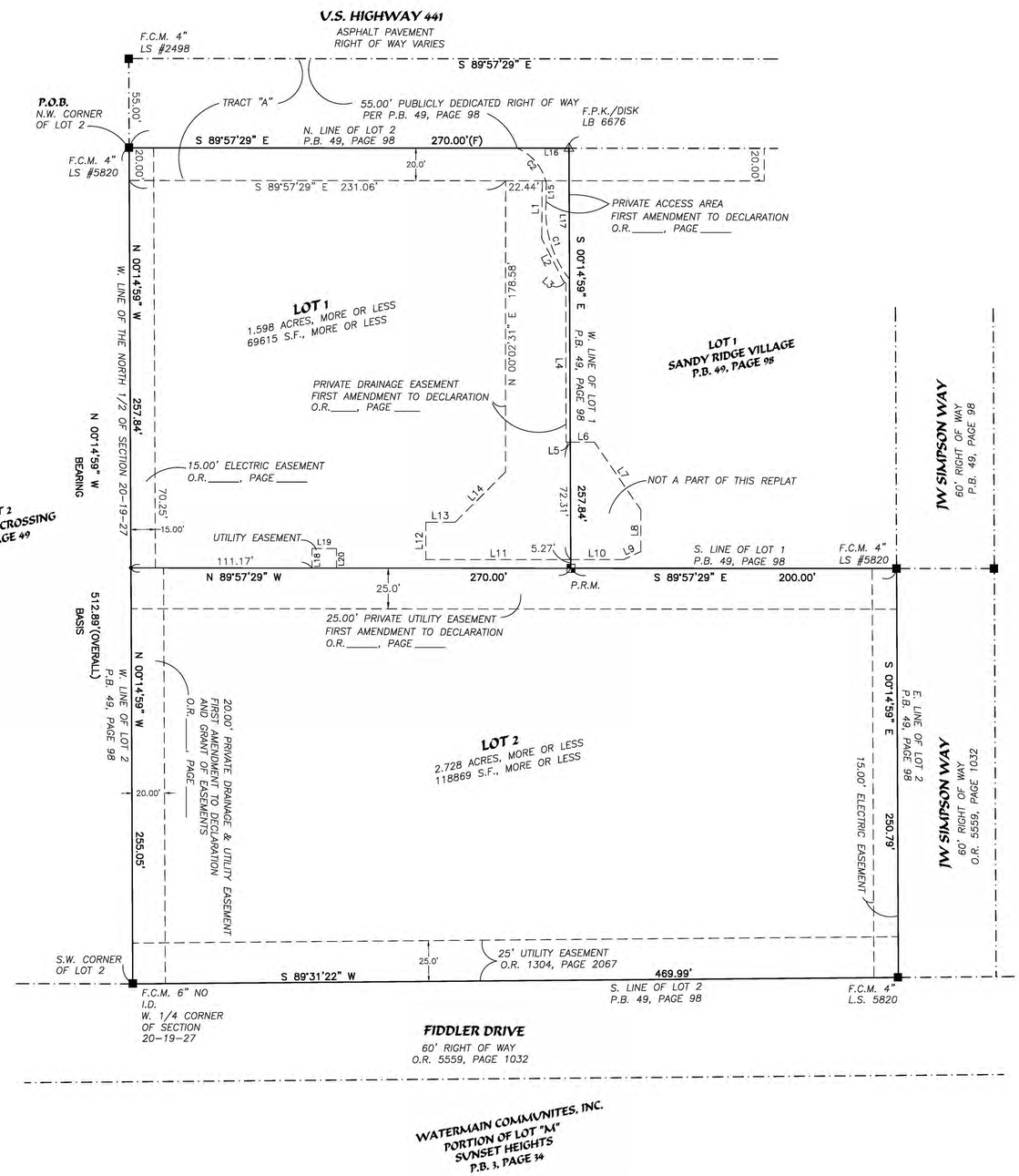

LEGEND & ABBREVIATIONS

P.R.M.	PERMANENT REFERENCE MONUMENT SET 4"x4" CONCRETE MONUMENT WITH DISK "LB#7425-P.R.M." UNLESS OTHERWISE NOTED
■	DENOTES FOUND CONCRETE MONUMENT AS NOTED
△	DENOTES P.K.NAIL & DISKS "LB# 7425"
●	DENOTES SET CAPPED IRON ROD 5/8", LB# 7425
O.R.	OFFICIAL RECORDS
P.B.	PLAT BOOK
PG.	PAGE
R/W	RIGHT OF WAY
CONC.	CONCRETE
EP	EDGE OF PAVEMENT
LB	LICENSED BUSINESS
P.K.	PARKER KAYLON NAIL
F.D.O.T.	FLORIDA DEPARTMENT OF TRANSPORTATION
NO.	NUMBER
F.C.M.	FOUND CONCRETE MONUMENT
S.C.I.R.	SET CAPPED IRON ROD
C.C.R.	CERTIFIED CORNER RECORD
P.O.B.	POINT OF BEGINNING
I.D.	IDENTIFICATION

LINE	BEARING	DISTANCE
L1	S 00°32'11" W	35.27'
L2	S 26°45'54" E	29.16'
L3	S 47°25'12" E	2.32'
L4	S 00°04'26" E	97.40'
L5	N 89°54'08" E	2.55'
L6	N 89°54'08" E	14.83'
L7	S 34°22'49" E	50.52'
L8	S 00°02'31" W	25.65'
L9	S 64°54'51" W	11.77'
L10	N 90°00'00" W	32.36'
L11	N 90°00'00" W	89.02'
L12	N 00°02'18" E	23.00'
L13	S 89°57'29" E	18.11'
L14	N 44°48'15" E	43.73'
L15	N 00°33'09" E	11.13'
L16	S 89°57'29" E	31.73'
L17	S 00°14'59" E	80.37'
L18	N 00°02'31" E	12.00'
L19	S 89°57'29" E	15.00'
L20	S 00°02'31" W	12.00'

CURVE	RADIUS	ARC LENGTH	CHORD LENGTH	CHORD BEARING	DELTA ANGLE
C1	67.88'	51.01'	49.82'	N 16°45'27" W	43°03'35"
C2	30.38'	29.15'	28.05'	N 39°27'12" W	54°59'01"

NOTICE: THIS PLAT, AS RECORDED IN ITS GRAPHIC FORM, IS THE OFFICIAL DEPICTION OF THE SUBDIVIDED LANDS DESCRIBED HEREIN AND WILL IN NO CIRCUMSTANCES BE SUPPLANTED IN AUTHORITY BY ANY OTHER GRAPHIC OR DIGITAL FORM OF THE PLAT. THERE MAY BE ADDITIONAL RESTRICTIONS THAT ARE NOT RECORDED ON THIS PLAT THAT MAY BE FOUND IN THE PUBLIC RECORDS OF THIS COUNTY.

EXTREME SURVEYING OF FLORIDA, INC.
LB No. 7425
29340 RHODIN PLACE
WESLEY CHAPEL, FLORIDA 33545
PH. (813) 973-2092
FAX. (813) 973-2122
EMail: alex@extreme-surveying.com

510 N. Baker St.
Mount Dora, FL 32757
352-735-7126

DATE: **July 5, 2022**

TO: **Honorable Mayor and City Council Members**

FROM: **Patrick C. Comiskey, City Manager** Patrick C. Comiskey

SUBJECT: Request Approval of First Reading of Ordinance No. 2022-09, Change in Zoning – Daniel C. and Judith Ann McWhorter

---

Introduction:
This is a request for City Council to approve the first reading of Ordinance No. 2022-09 and hold the hearing for the second reading and adoption.

Call Up Item
Mayor Asks Attorney to Read Ordinance by Title Only
City Manager Background
Public Hearing
Discussion
Council Action

Discussion:
Further rezoning descriptions and details are contained in Attachment #1 (*PZC Memo Dated June 15, 2022*). The legal advertisements for the public hearings are provided in Attachment #2. The applicant is requesting a change of the zoning district WP-1 (Workplace) to City MU-1 (Mixed Use Traditional) for approximately 8.77 acres located on the southeast corner of Highland Street and Camp Avenue. This request is for the MU-1zoning to be consistent with the underlying Future Land Use designation. The applicant currently does not have a development plan for the property and is only seeking to rezone the property so that the zoning district matches the land use category. Future development of the property will require the submittal of a development application (preliminary plat, site plan, etc).

The sequence of events leading to the presentation to the City Council are as follows:

The Planning and Zoning Commission (PZC) at their regularly scheduled meeting held on June 15, 2022, recommended approval (Vote 5-0. Two members were absent) of the rezoning from WP-1 to MU-1.

The Development Review Committee (DRC) on May 25, 2022, recommended approval of the change in zoning and forwarded the same to the PZC.

Budget Impact:
There are no budgetary impacts on the City relative to the processing of the rezoning action.

Strategic Impact:
Rezoning requests which address density and intensity changes are consistent with Growth Management and Economic Development Goals to foster development and growth opportunities. GOAL 1: Economic Development; Objective 1.3. Attract new commercial businesses/residential development.

Recommendation:
City Council to approve First Reading of Ordinance No. 2022-09 and hold a hearing for second reading and adoption.

Attachment(s):
1. Attachment 1 - PZC Memo Dated June 15, 2022 (ADA)
2. Attachment 2 - Legal Ad Publications(ADA)
3. Ordinance 2022-09 (1st Reading) McWhorter MU-1.SGS
4. Exhibit A - Property Depiction (Map)

Prepared by:	Vince Sandersfeld, Planning and Development Director	
Reviewed by:	Sherry Sutphen, City Attorney	Approved - 6/27/2022
	Jessica Burnham, City Clerk	Approved - 6/27/2022
	Jeanann Hand, Deputy City Clerk	Approved - 6/27/2022
	Patrick Comiskey, City Manager	Final Approval - 6/27/2022

ATTACHMENT #1

Planning and Development
510 N. Baker St.
Mount Dora, FL 32757
352-735-7113
Fax: 352-735-7191
E-mail: plandev@cityofmountdora.com

DATE: June 15, 2022

TO: Planning and Zoning Commission

FROM: Development Review Committee
Vince Sandersfeld, Planning Director

THROUGH: Michele Janiszewski, AICP . Senior Planner

RE: Rezoning Application; Change in Zoning for assignment from WP-1 to MU-1; 8.77 Acres (Site Area); Located at the Southeast Corner of Highland Street and Camp Avenue (site address: 610 S.Highland Street); Green Consulting Group, Inc. (Applicant); Daniel C. and Judith Ann McWhorter (Owners).
Project No. RZ-22-01

SUMMARY OF RECOMMENDATION:

Staff recommends approval of the application to rezone 8.77 +/- acres from Workplace (WP-1) to Mixed Use Traditional (MU-1) and forward same to City Council.

REFERENCES/SUPPORT:

LDR Section 3.3
Policy 4.g(13) FLUE of the Mount Dora Comprehensive Plan 2045

SITE SUMMARY:

Owners	Daniel C. and Judith Ann McWhorter
Applicant	Green Consulting Group, Inc., Timothy W. Green
Address	610 S. Highland Street
General Location:	Southeast corner of the intersection of Highland Street and Camp Avenue
Alternate Key Nos.	1797250 & 2545232
Zoning District:	Workplace District or WP-1
Proposed Zoning District:	Mixed Use Traditional or MU-1
Future Land Use Category:	Mixed Use Traditional or MU-1
Overlays:	Mount Dora CRA
Site Area:	8.77 +/- acres
Existing Use:	Single family residence and associated structures. Storage Barn/Structure
Proposed Use:	None (zoning district assignment)

DEVELOPMENT STANDARDS:

Development Standard	WP-1 (Existing)	MU-1 (Proposed)
Maximum Floor Area Ratio (FAR)	0.70	Min. 0.25 – Max. 3.00
Density	Dwellings Not Permitted	6 - 35 d.u. / acre
Min. Lot Size	15,000 SF	None
Max. Building Height	35’	60’
Max. Impervious Surface Ratio (ISR)	Not Specified	100%
Min. Open Space	35%	35%

SURROUNDING PROPERTY TABLE:

Direction	Jurisdiction	Future Land Use	Zoning District(s)	Existing Use(s)	Comments
North	City	Commercial, Residential Professional	C-2A, PUD, RP	Residential, Vacant Land Commercial	None
South	City	Commercial, Recreation, Industrial, Medium Density	WP-1	Residential, Commercial, Vacant Land	Carriers A/C
East	City	Industrial, Mixed-Use Traditional	WP-1, PUD	Light Manufacturing, Warehousing	Industrial Park
West	City	MU-1	WP-1	Warehousing, Residential	Amerigas

ANALYSIS:

The applicant proposed to rezone the subject property, comprising of approximately 8.77 acres, from Workplace District (WP-1) to Mixed-Use Traditional District (MU-1). The Applicant currently does not have a development plan for the property and is only seeking to rezone the property so that the zoning district matches the land use category. Future development of the property will require the submittal of a development application (preliminary plat or site plan).

The Mixed Use Future Land Use designation was established by Ordinance No. 2012-13 enacted on February 19, 2013, resulting from serval policy changes from the Citywide Visioning Study Final Report. As stated in the Vision Study several strategies were development to encourage redevelopment of the former citrus co-op and other lands to help anchor the district as a gateway to the City along Highland Street. The Mixed Use Traditional (MU-1) zoning district and design standards were adopted by Ordinance No. 2013-08 enacted on October 1, 2013. The current WP-1 zoning has remained assigned to these parcels as a placeholder until such time the owners re-zoning to match the underlying Future Land Use.

The applicant has indicated to staff the desire to formally assigned MU-1 and at a later date present master site plan for proposed uses and design elements consistent with this district. This will enable the applicant/owner to better market the properties.

Highland Street is under Lake County jurisdiction and future ingress/egress will require coordination with the County, if applicable.

STANDARDS FOR REVIEW:

Pursuant to LDC Section 3.3.4, the City shall consider the following criteria in reviewing applications for a rezoning:

1. The need and justification for the change:
   The applicant is seeking to make the property's zoning district consistent with the property's land use category. The property is part of the Mixed Use Transitional land use category. The property's current Workplace (WP-1) zoning district is not permitted within the Mixed Use Transitional land use category (Section 1.4 *Land Use Category and Zoning District Compatibility Table LDC).* As such, the application to rezone the property from WP-1 to MU-1 is consistent with the City's Land Development Code. This application for the change in zoning is for assignment of MU-1.

2. The effect of the change, if any, on the particular property and on surrounding property.
   The assignment of the proposed MU-1 is consistent with the underlying land use for surrounding properties. Lands located south of Camp Avenue and on both sides of Highland Street are intended to be master planned for development and gateway uses.

3. The amount of undeveloped land having the same classifications as that requested in the general area and throughout the city.
   The proposed change is simply assignment of zoning district to match the land use category as stated sbove. These parcels are intended to be assigned MU-1.The relationship of the proposed amendment to the purpose of the City's *Comprehensive Plan*, with appropriate consideration as to whether the proposed change will further the purpose of this Code and the Plan.

   The subject property is part of the Mixed-Use Traditional (MU-1) land use category. Section 4.g.13, Future Land Use Element, Comprehensive Plan, requires new projects within this category to contain a minimum of two land uses and allows public, civic, commercial, office, multi-family residential, and limited single-family use as an adjunct to a business use. This category encourages a mix of medium/high density residential development with on-site commercial and office uses.

   Section 12.e, Future Land Use Element of the Comprehensive Plan, states that Highland Street is a corridor of with a mix of residential, neighborhood commercial, light industry uses and serves as a transition from the gateway areas and to the downtown. This section also expressly states that more intense mixed-use development.

   The proposed MU-1 zoning district encourages a mixture of medium/high residential development with on-site commercial, office, and civic uses. LDC Section 3.4.16 states that the MU-1 zoning district is appropriate for the Mixed Use Traditional (MU-1) and Mixed Use Downtown (MU-2) land use categories. This is consistent with the Comprehensive Plan which also requires mixed use development on the subject property.

   LDC Section 3.4.16.1.f, states that one of the intents of the MU-1 zoning district is to allow for a mix of land uses which strengthens opportunities for economic vitality and

supports diversity of housing opportunities. This is consistent with the Comprehensive Plan which seeks intense, mixed-use development and redevelopment along the Highland Street Corridor.

4. The availability and provision of adequate services and facilities:
Services and facilities are currently available to this property. Further evaluations will be determined at time of site plan/platting depending upon the proposed use(s).

5. The impact on the natural environment:
There are no anticipated, adverse impacts on the natural environment as a result of this rezoning. A portion of this property is current development with single-family dwelling and a storage structures.

6. Other Criteria as may be applicable:
Staff did not identify any additional, pertinent information regarding this application.

Notifications:
JPA Notice to Lake County: May 4, 2022
Legal Notice PZC and Notice to City Council: June 3, 2022
Notice to Surrounding Owners: June 3, 2022
Non-Legal with Map Ad City Council 1st Reading: June 24, 2022
Ordinance Enactment Legal Ad: July 8, 2022
Non-Legal with Map Ad City Council Adoption: July 8, 2022

Public Hearing Schedule:
DRC: May 25, 2022
PZC: June 15, 2022
City Council 1st Reading: July 5, 2022
City Council 2nd Reading/Adoption: July 19, 2022

ATTACHMENTS:
Vicinity Map
Aerial Map
Future Land Use Map
Zoning Map
Application

ATTACHMENT #1

McWhorter
Change In Zoning
8.77 Acres

Legend

Subject Property

N

N.T.S.

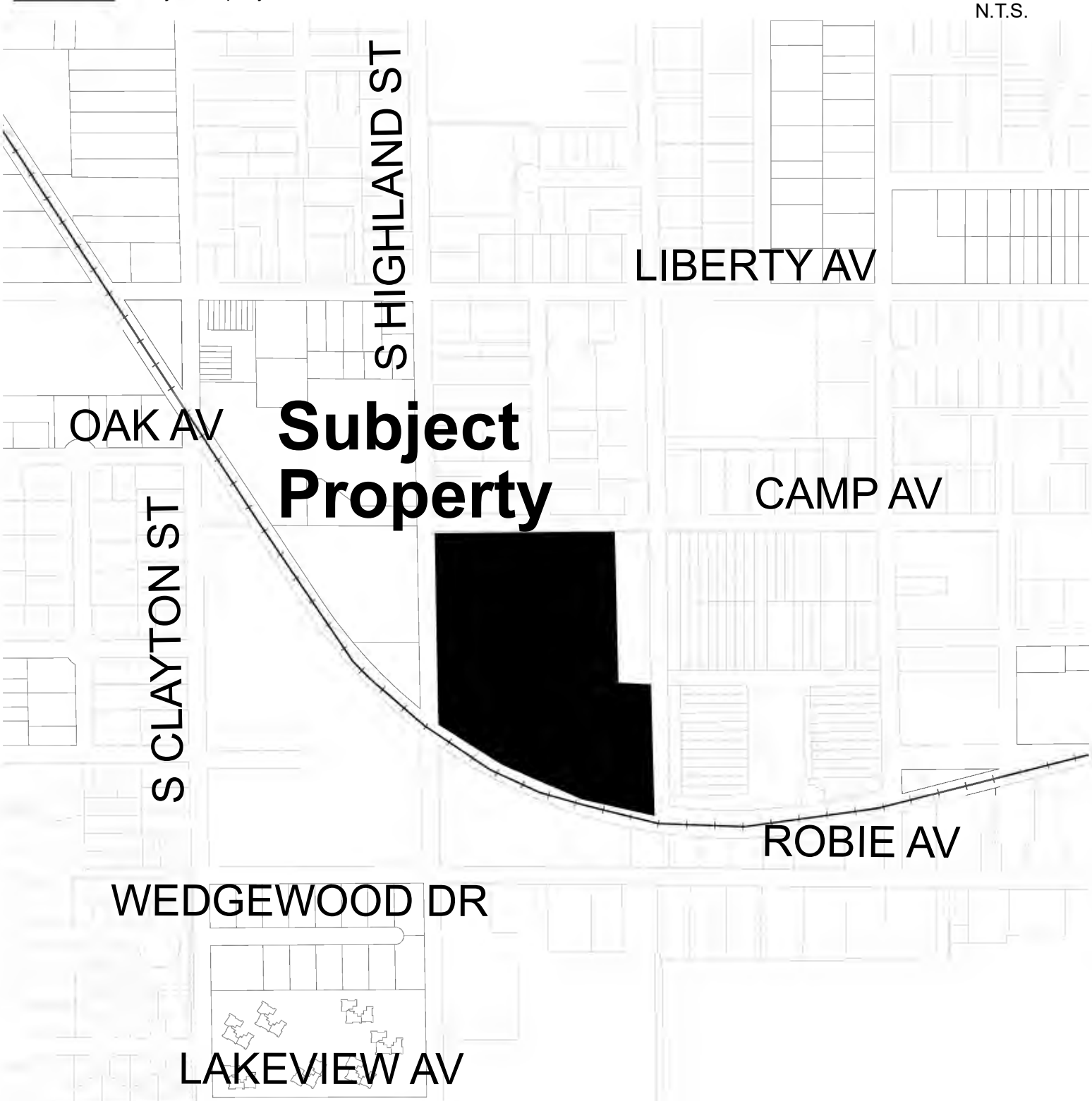

Date: 5/5/2022

Prepared by: Mount Dora Planning and Development Dept * 510 N. Baker Street, Mount Dora, FL 32757 * 352-735-7112

CITY OF MOUNT DORA

ATTACHMENT #1

McWhorter
Aerial Map

Legend

Subject Property

N

N.T.S.

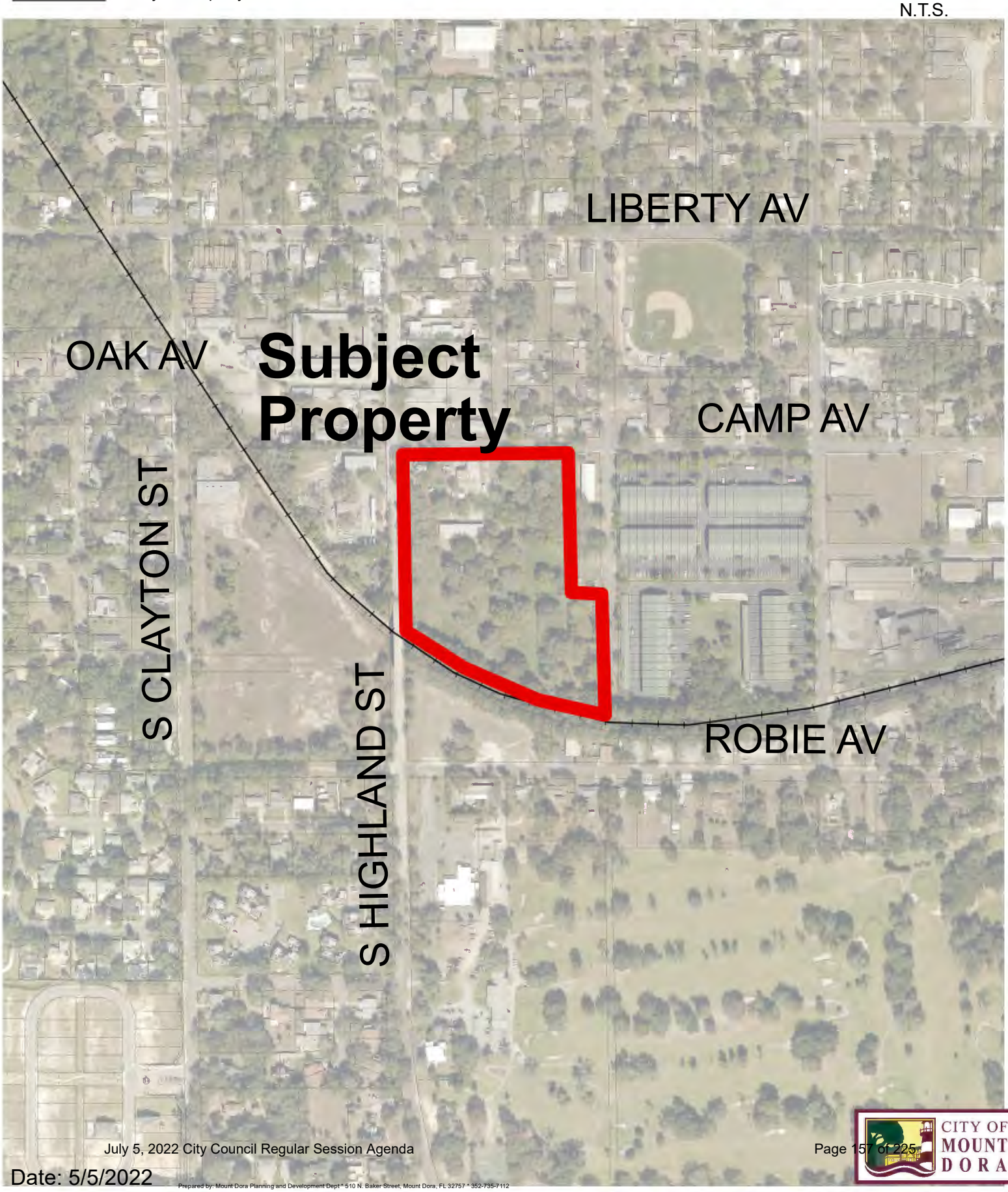

Date: 5/5/2022

Prepared by: Mount Dora Planning and Development Dept * 510 N. Baker Street, Mount Dora, FL 32757 * 352-735-7112

CITY OF MOUNT DORA

ATTACHMENT #1

McWhorter
Future Land Use Map

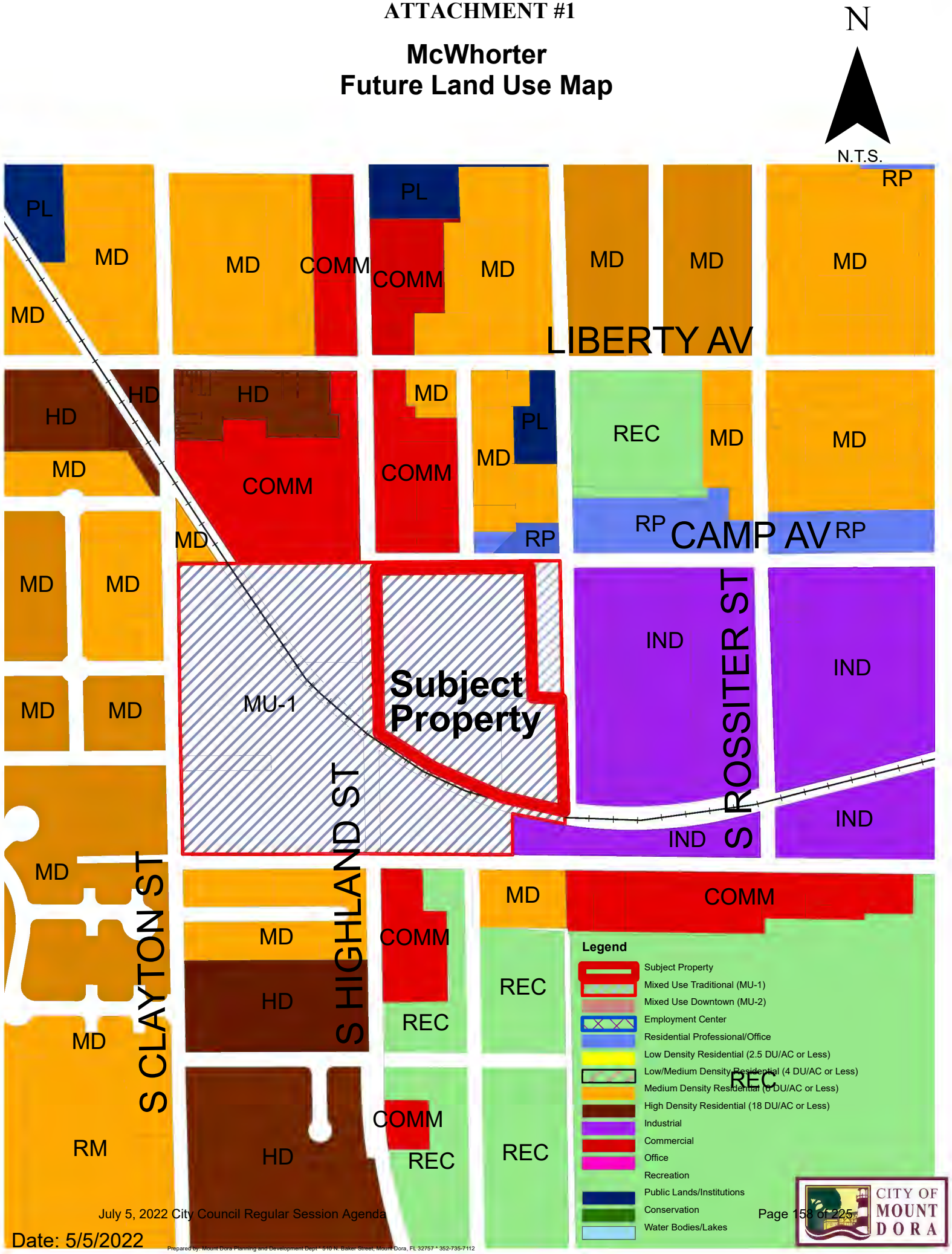

Date: 5/5/2022

Prepared by: Mount Dora Planning and Development Dept * 510 N. Baker Street, Mount Dora, FL 32757 * 352-735-7112

ATTACHMENT #1

McWhorter Zoning Map

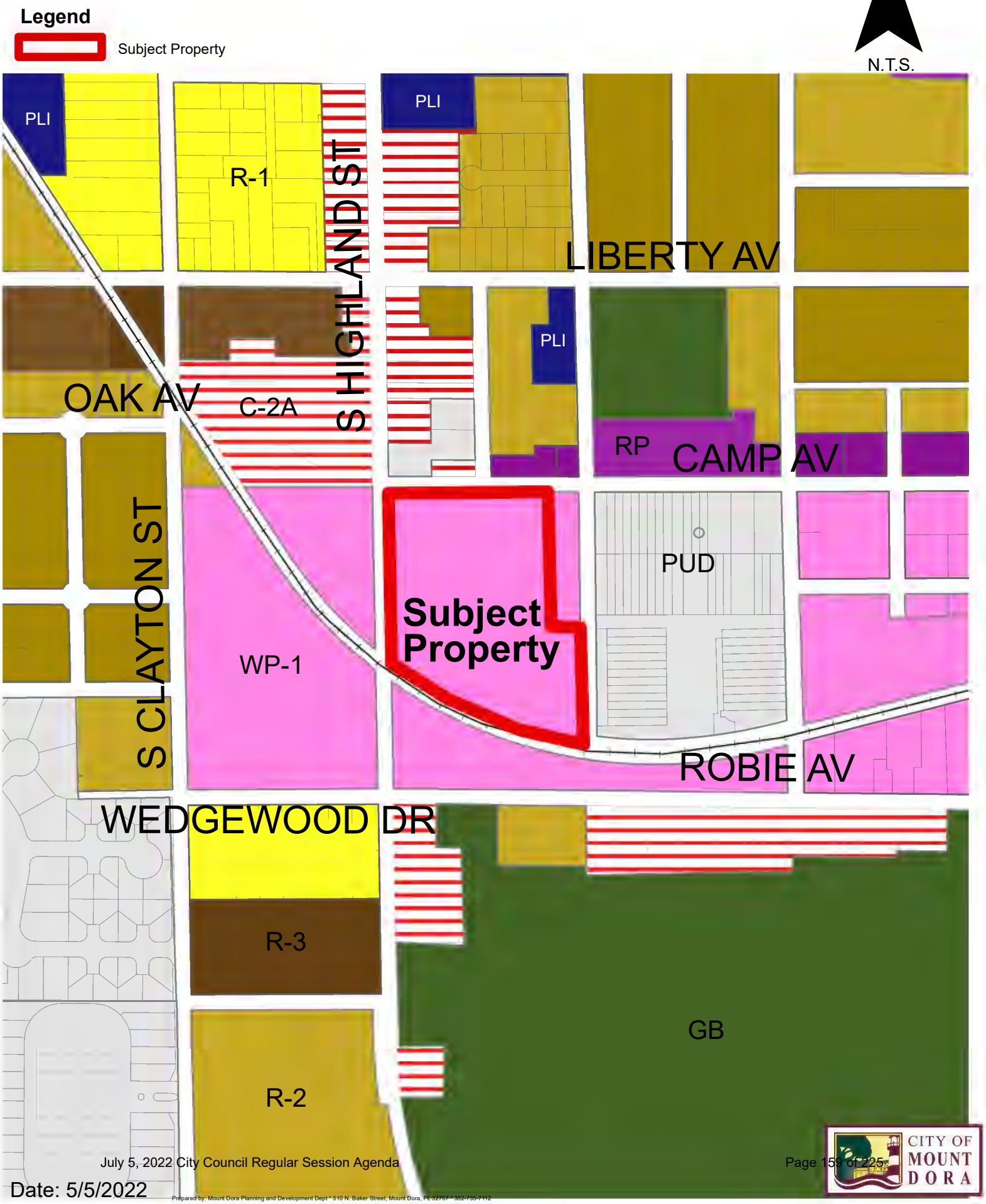

Date: 5/5/2022

Prepared by: Mount Dora Planning and Development Dept * 510 N. Baker Street, Mount Dora, FL 32757 * 352-735-7112

CITY OF MOUNT DORA

CITY OF MOUNT DORA

Z22-01

City of Mount Dora
Planning and Development
510 N. Baker St.
Mount Dora, FL 32757
352-735-7112
Fax: 352-735-7191
E-mail: plandev@cityofmountdora.com

REZONING APPLICATION

Date: May 2, 2022

1. Applicant's Name: Timothy W. Green
   Company's Name: Green Consulting Group, Inc.
   Address: 4070 United Avenue
   City, State & Zip: Mount Dora, FL 32757
   Phone: 352-357-9241 E-mail: tgreen@greenconsultinggroup.com

2. Owner's Name: Daniel C and Judith A McWhorter
   Company's Name: N/A
   Address: 34804 Estes Road
   City, State & Zip: Eustis, FL 32736
   Phone: 352-397-4869 E-mail: c/o jake.guenther@g3development.com

3. The property generally located and list adjacent streets: East of Highland Street and South of Camp Avenue

4. The address(s) of the property: 610 South Highland Street

5. Size of property in Acres: 8.77 Square Feet: 382,073.2

6. Current Zoning District: WP-1

7. Requested Zoning District: MU-1

8. Future Land Use Category: MU-1

9. Present use and structures on the property (list number of residential dwelling units):
   1- SF Home, 3-Storage Building, 2-Covered Storage Areas

ATTACHMENT #1

10. Building Size (Existing): SF - 1432, Others - 870

11. Proposed use of property: Mixed Use

12. State the reason for this request, per Section 3.3 of the City's land Development Code (attached additional sheets and support data):

To align the zoning with the existing future land use

13. Is the proposed use permissible in the requested district? Yes

14. Surrounding Future Land Use, Zoning, and Existing Use by City/County (fill-in table):

Direction	City/County	FLU	Zoning	Existing Use(s)
North	City	Commercial	C-2/PUD	Parking
South	City	MU-1	WP-1	Railroad
East	City	MU-1	WP-1	Office / Warehouse
West	City	MU-1	WP-1	Commercial / SF Home

(districts/categories may be abbreviated)

ATTACHMENT #1

CERTIFICATION AND SIGNATURE

AFFIDAVIT

I, Timothy W Green, being first duly sworn, depose and say that I apply for the request contained herein, and that all answers, information, sketches, data and other supplementary matter attached to or included herewith as part of this application, are accurate and true to the best on my knowledge and belief.

Signature of Applicant

Timothy W Green
Print or Type Name

STATE OF FLORIDA
COUNTY OF LAKE
CITY OF MOUNT DORA

The foregoing instrument was acknowledged before me this 2nd day of May 2022 by Timothy W Green who is personally known to me or who has produced FL Drivers License as identification and who did X or did not _____ take an oath.

SEAL:

MARISA MUNIZ
MY COMMISSION # HH 103828
EXPIRES: March 11, 2025
Bonded Thru Notary Public Underwriters

Notary Public

Marisa Muniz
Print or Type Name

ATTACHMENT #1

Legal Description (as furnished)

Parcel 1

All of Blocks 375, 376 and 385, and that part of Block 391, 392, and 386, north of the railroad and bound on the north by Camp Avenue, on the east by Simpson Street, and on the west by Highland Street according to the plat of the Town of Mount Dora, Lake County, Florida, in Section 32, Township 19 South, Range 27 East, including all buildings located thereon,

LESS that part of Blocks 385 and 392, according to the plat of Mount Dora, recorded in Plat Book 3, pages 37 through 43, Public Records of Lake County, Florida, described as follows: From the Northeast corner of Block 376, according to said Plat, run South along the West right-of-way of Simpson Street 435.55 feet, to an iron pipe and the point of beginning of this description; thence continue South along West right-of-way of Simpson Street 367 feet, more or less, to the northerly right-of-way of Seaboard Coast Line Railroad and a point hereby designated as Point "A", thence return to the point of beginning and run West, parallel to the North line of said Block 375 a distance of 200 feet to a concrete monument, thence run South, parallel to the West right-of-way line of Simpson Street 320 feet, more or less to the Northerly right-of-way of Seaboard Coast Line Railroad, thence run Southeasterly along said Northerly right-of-way 206.65 feet, more or less, to the herein designated Point "A".

And less that part of Blocks 376 and 385, according to the Plat of Mount Dora, recorded in Plat Book 3, pages 37 through 43, Public Records of Lake County, Florida, described as follows: From the Northeast corner of said Block 376 run thence South along the East lines of Blocks 376 and 385 thereof a distance of 435.60 feet, thence run West and parallel to the North line of said Block 376 a distance of 100 feet, thence North and parallel to the East line of Blocks 376 and 385 a distance of 435.60 feet, thence East a distance of 100 feet to the point of beginning.

Parcel 2

That part of Blocks 385 and 392, according to the plat of Mount Dora, recorded in Plat Book 3, pages 37 through 43, Public Records of Lake County, Florida, described as follows: From the Northeast corner of Block 376, according to said Plat, run South along the West right-of-way of Simpson Street 435.55 feet, to an iron pipe and the point of beginning of this description; thence continue South along West right-of-way of Simpson Street 367 feet, more or less, to the northerly right-of-way of Seaboard Coast Line Railroad and a point hereby designated as Point "A", thence return to the point of beginning and run West, parallel to the North line of said Block 375 a distance of 200 feet to a concrete monument, thence run South, parallel to the West right-of-way line of Simpson Street 320 feet, more or less to the Northerly right-of-way of Seaboard Coast Line Railroad, thence run Southeasterly along said Northerly right-of-way 206.65 feet, more or less, to the herein designated Point "A".

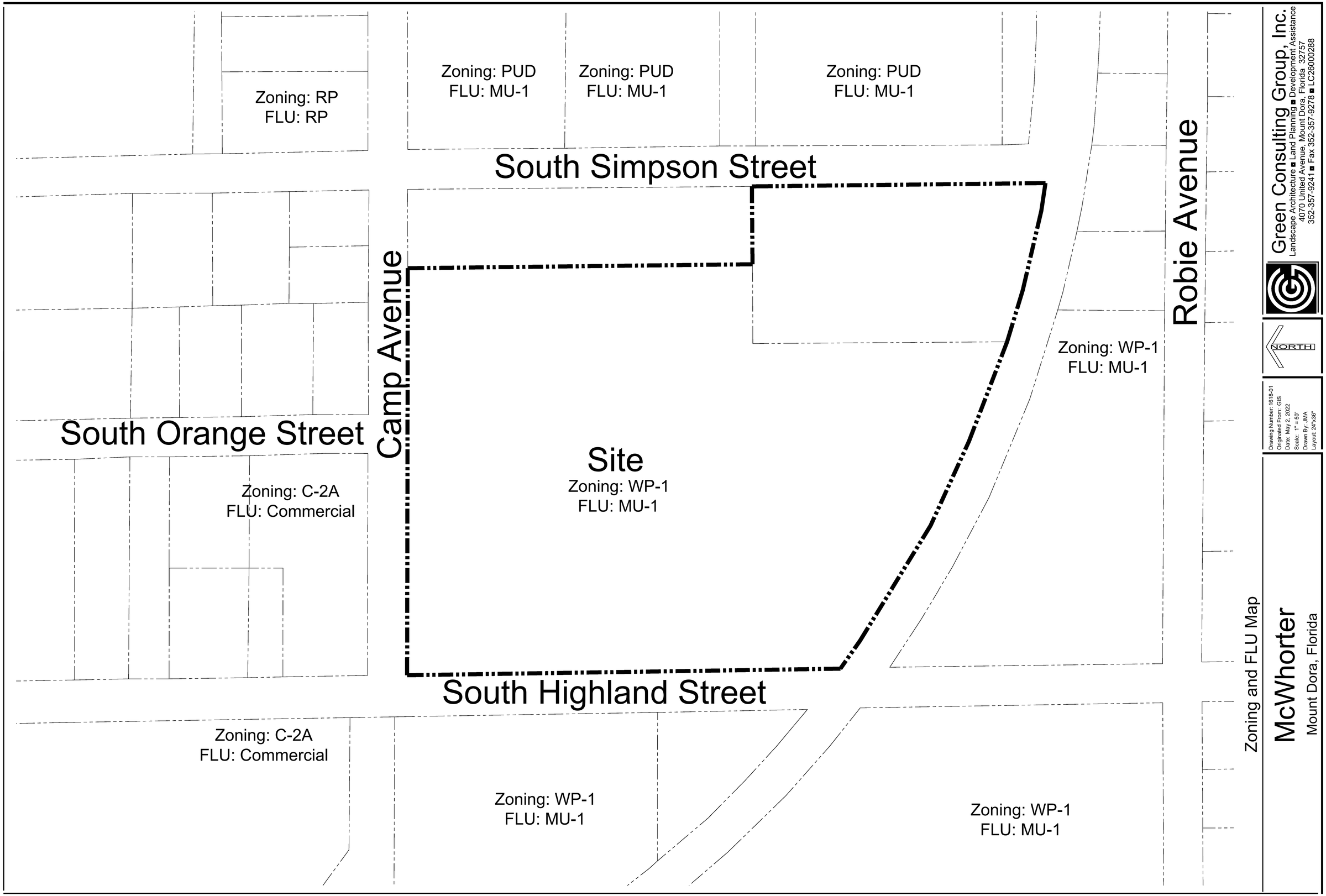
Zoning: RP
FLU: RP
Zoning: PUD
FLU: MU-1
Zoning: PUD
FLU: MU-1
Zoning: PUD
FLU: MU-1
South Simpson Street
Camp Avenue
Robie Avenue
Zoning: WP-1
FLU: MU-1
South Orange Street
Site
Zoning: WP-1
FLU: MU-1
Zoning: C-2A
FLU: Commercial
South Highland Street
Zoning: C-2A
FLU: Commercial
Zoning: WP-1
FLU: MU-1
Zoning: WP-1
FLU: MU-1
Green Consulting Group, Inc.
Landscape Architecture ■ Land Planning ■ Development Assistance
4070 United Avenue, Mount Dora, Florida 32757
352-357-9241 ■ Fax 352-357-9278 ■ LC26000288
NORTH
Drawing Number: 1618-01
Originated From: GIS
Date: May 2, 2022
Scale: 1" = 50'
Drawn By: JMA
Layout: 24"x36"
Zoning and FLU Map
McWhorter
Mount Dora, Florida

ADDRESS
610 South Highland Street
Mount Dora, FL 32757

This is to certify that this map or plat and the survey on which it is based were made in accordance with the 2021 Minimum Standard Detail Requirements for ALTA/NSPS Land Title Surveys, jointly established and adopted by ALTA and NSPS, and includes Items 1, 2, 3, 4, 7a, 8 and 13 of Table A thereof. The field work was completed on 2/12/22.

ALTA/NSPS Land Title Survey

SURVEYOR'S CERTIFICATION

I HEREBY CERTIFY in favor of Zimmerman, Kiser & Sutcliffe, P.A., Fidelity National Title Insurance Company & Peacock Capital, LLC that (a) this survey (i) was made on the ground and is a correct representation of the subject property as of 2/12/22; (ii) meets or exceeds the standards of practice set forth by the Standards of Practice for Land Surveying (Chapter 5J-17.051 and 5J-17.052, F.A.C); (iii) shows the location and recording reference of all easements and any and all other matters of record affecting the subject property that have been furnished to the Surveyor, including all those items set forth in Schedule B-II of that certain Fidelity National Title Insurance Company Commitment for Title Insurance dated effective 1/13/22 at 11:00 PM, Order No. 10193310, (iv) shows the lines of all streets abutting the land and the widths thereof if known; (v) shows all applicable building setback lines established by applicable zoning and/or other governmental ordinances, statutes, or regulations that have been furnished to the Surveyor; and (vi) shows any other visible matters on the ground which may adversely affect title to the subject property; (b) that there are no visible encroachments either way across the boundary lines of the subject property except as shown; (c) that no adjoining private property visibly serves the subject property for drainage, stormwater retention or detention purposes, except as shown; (d) that ingress and egress to the subject property is provided by South Highland Street, East Camp Avenue & South Simpson Street, the same being paved, dedicated public right of ways maintained by City of Mount Dora; (e) that the subject property does not visibly serve any adjoining property for drainage, ingress or egress or any other purpose, except as shown; and (f) that based on the Federal Emergency Management Agency Flood Insurance Rate Map, Panel No. 12069C0367E, the subject property is not contained within a Flood Prone Area.

The Surveyor has reviewed all survey related items contained in Schedule B-II of that certain Commitment for Title Insurance issued by Commonwealth Land Title Insurance Company with Order Number: 10193310 and an Effective Date of January 13, 2022 at 11:00 P.M. and has the following comments:

1. Defects, liens, encumbrances, adverse claims or other matters, if any, created, first appearing in the public records or attaching subsequent to the effective date hereof but prior to the date the proposed insured acquires for value of record the estate or interest or mortgage thereon covered by this form.
Not applicable for Surveyor's review.
2. Taxes and assessments for the year 2022 and subsequent years, which are not yet due and payable.
Not applicable for Surveyor's review.
3. Standard Exceptions:
A. Any encroachment, encumbrance, violation, variation, or adverse circumstance affecting the Title that would be disclosed by an accurate and complete land survey of the Land.
Not applicable for Surveyor's review.
B. Rights or claims of parties in possession not shown by the public records.
Not applicable for Surveyor's review.
C. Any lien, or right to a lien, for services, labor, or materials heretofore or hereafter furnished, imposed by law and not shown by the public records.
Not applicable for Surveyor's review.
D. Taxes or assessments which are not shown as existing liens in the public records.
Not applicable for Surveyor's review.
4. Any claim that any portion of the insured land is sovereign lands of the State of Florida, including submerged, filled or artificially exposed lands accreted to such land.
Not applicable for Surveyor's review.
5. Any lien provided by County Ordinance or by Chapter 159, Florida Statutes, in favor of any city, town, village or port authority for unpaid service charges for service by any water, sewer or gas system supplying the insured land.
Not applicable for Surveyor's review.
6. Restrictions, covenants, conditions, easements and other matters as contained on the Plat of Town of Mount Dora, recorded in Plat Book 3, Page 37 through 43, inclusive, of the Public Records of Lake County, Florida.
Subject to. Contains no plottable items.
7. Rights of tenants occupying all or part of the insured land under unrecorded leases or rental agreements.
Not applicable for Surveyor's review.

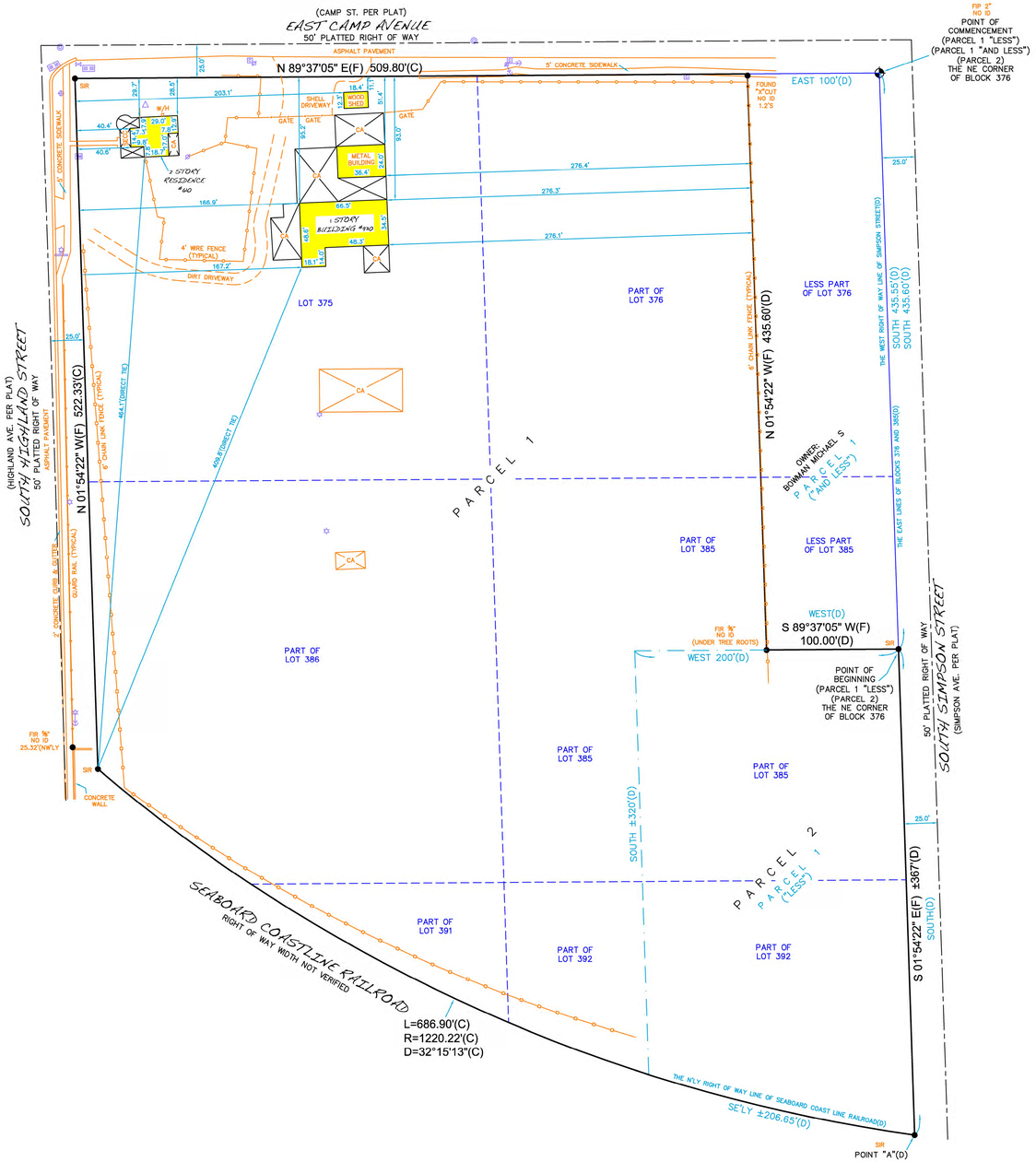

Legal Description (as furnished)

Parcel 1
All of Blocks 375, 376 and 385, and that part of Block 391, 392 and 386, north of the railroad and bound on the north by Camp Avenue, on the east by Simpson Street, and on the west by Highland Street according to the plat of the Town of Mount Dora, Lake County, Florida, in Section 32, Township 19 South, Range 27 East, including all buildings located thereon,

LESS that part of blocks 385 and 392, according to the plat of Mount Dora, recorded in Plat Book 3, pages 37 through 43, Public Records of Lake County, Florida, described as follows: From the Northeast corner of Block 376, according to said Plat, run South along the West right-of-way of Simpson Street 435.55 feet, to an iron pipe and the point of beginning of this description; thence continue South along West right-of-way of Simpson Street 367 feet, more or less, to the northerly right-of-way of Seaboard Coast Line Railroad and a point hereby designated as Point "A", thence return to the point of beginning and run West, parallel to the North line of said Block 375 a distance of 200 feet to a concrete monument, thence run South, parallel to the West right-of-way of Simpson Street 320 feet, more or less to the Northerly right-of-way of Seaboard Coast Line Railroad, thence run Southeasterly along said Northerly right-of-way 206.65 feet, more or less, to the herein designated Point "A".

And less that part of Blocks 376 and 385, according to the Plat of Mount Dora, recorded In Plat Book 3, pages 37 through 43, Public Records of Lake County, Florida, described as follows: Front the Northeast corner of said Block 376 run thence South along the East lines of Blocks 376 and 385 thereof a distance of 435.60 feet, thence run West and parallel to the North line of said Block 376 a distance of 100 feet, thence North and parallel to the East line of Blocks 376 and 385 a distance of 435.60 feet, thence East a distance of 100 feet to the point of beginning.

Parcel 2
That part of blocks 385 and 392, according to the plat of Mount Dora, recorded in Plat Book 3, pages 37 through 43, Public Records of Lake County, Florida, described as follows: From the Northeast corner of Block 376, according to said Plat, run South along the West right-of-way of Simpson Street 435.55 feet, to an iron pipe and the point of beginning of this description; thence continue South along West right-of-way of Simpson Street 367 feet, more or less, to the northerly right-of-way of Seaboard Coast Line Railroad and a point hereby designated as Point "A", thence return to the point of beginning and run West, parallel to the North line of said Block 375 a distance of 200 feet to a concrete monument, thence run South, parallel to the West right-of-way of Simpson Street 320 feet, more or less to the Northerly right-of-way of Seaboard Coast Line Railroad, thence run Southeasterly along said Northerly right-of-way 206.65 feet, more or less, to the herein designated Point "A".

LEGEND

CA = Covered Area
ID = Identification
LB = Licensed Business
FIP = Found Iron Pipe
FIR = Found Iron Rod
C/S = Concrete Slab
D = Central Angle
L = Arc Length
R = Radius
(P) = Plat Dimension
(C) = Calculated Dimension
(D) = Deed Dimension
(F) = Field Dimension
OR Book = Official Record Book
SIR = Set ½" Iron Rod & Cap LB#7788
CBP = Covered Brick Pavers
FCM = Found Concrete Monument
SECC = Screen Enclosed Covered Concrete
FN&D = Found Nail & Disk
SN&D = Set Nail & Disk LB#7788
BP = Brick Pavers
CWD = Covered Wood Deck
= Mitered End Section
W/H = Water Heater
= Water Valve
= ±Septic Area
WF = Wood Fence
VF = Vinyl Fence
CLF = Chain Link Fence
FC = Fence Corner
FE = Fence End
= Water Valve
= Satellite Dish
= Guy Wire
= Manhole
= Sign
= Drainage Inlet
= Bollard
Pg = Page
= Electric Box
WM = Water Meter
= Light Pole
= Telephone Riser
TR = Transformer
P/E = Pool Equipment
= Cable TV Riser
ONS = Onsite
OFFS = Offsite
= Power Pole
ohu = Overhead Utilities
= Well

JOB #:	VLSR22-58861
CLIENT #:	12767-84
FIELD DATE: 2/12/22	CREW: 3650
DRAFTER:	DF
APPROVED:	EWD
SCALE:	1" = 50'

COPYRIGHT 2011

X
Borrower's Acknowledgment and Acceptance

X
Borrower's Acknowledgment and Acceptance

VICINITY MAP

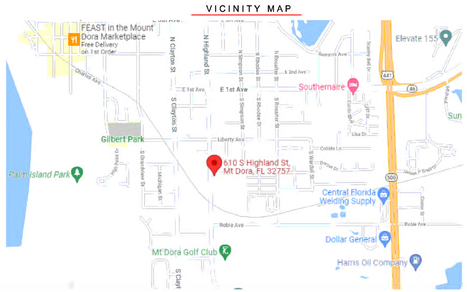

ADDITIONAL NOTES:
3. Additions or deletions to this survey by anyone other than the signing party or parties is prohibited without the written consent of the signing party or parties.
4. The property shown hereon is subject to all easements, restrictions and reservations which may be shown or noted on the record plat and within the public records of the county the subject property is located. This survey only depicts survey related information such as easements and setbacks that are shown on a record plat or have been furnished to the Surveyor.
5. Building ties and dimensions for improvements should not be used to reconstruct boundary lines.
6. Subject property contains ±382,073.2 Sq.Ft. / ±8.77 Acres.

CERTIFIED TO: (AS FURNISHED)
Zimmerman, Kiser & Sutcliffe, P.A.
Fidelity National Title Insurance Company
Peacock Capital, LLC

FLOOD ZONE
SUBJECT PROPERTY SHOWN HEREON APPEARS TO BE LOCATED IN FLOOD ZONE X (AREA OF MINIMAL FLOOD HAZARD) AS SCALED FROM FIRM MAPS (PER MAPPER WEBSITE). THIS SURVEYOR MAKES NO GUARANTEES AS TO THE ACCURACY OF THE FLOOD ZONE DESIGNATION. A FLOOD ELEVATION CERTIFICATE SHOULD BE CONTACTED FOR VERIFICATION.

LIST OF POSSIBLE ENCROACHMENTS:
SOME UTILITIES LIE WITHIN SUBJECT PROPERTY. SURVEYOR MAKES NO GUARANTEES AS TO THE OWNERSHIP OF FENCES NOT DETERMINED.

BASIS OF BEARING:
BEARINGS ARE BASED ON THE SOUTH RIGHT-OF-WAY OF EAST CAMP AVENUE WHICH HAS AN ASSUMED BEARING OF N 89°37'05" E.

NOTES
1. UNDERGROUND UTILITY INSTALLATIONS, UNDERGROUND IMPROVEMENTS AND ENCROACHMENTS WERE NOT LOCATED UNLESS OTHERWISE NOTED.
2. THE PURPOSE OF THIS SURVEY IS FOR USE IN OBTAINING TITLE INSURANCE AND CONSTRUCTION PURPOSES.
THIS SURVEY IS PREPARED FOR THE EXCLUSIVE USE AND BENEFIT OF THE PARTIES LISTED HEREON AND CERTIFIED TO AND NOT TRANSFERABLE TO ANY OTHER PERSON OR ENTITY.

L87788

VISIONLAND
SURVEYING
301 E Pennsylvania Ave, Tavares, Florida, FL 32778 P: (352) 357-4814

SURVEYOR'S CERTIFICATE
I HEREBY CERTIFY THAT THIS SURVEY IS TRUE AND ACCURATE REPRESENTATION OF A SURVEY PREPARED UNDER MY DIRECTION.

DATE	REVISION	DATE	REVISION

DATED: 2/16/22

Brent W. Durden, PSM
President
PROFESSIONAL SURVEYOR & MAPPER
THIS DOCUMENT CONSISTS OF ONE SHEET ONLY AND IS NOT VALID WITHOUT THE ELECTRONIC SIGNATURE/SEAL OF THE PARTIES BELOW, OR THE LISTED FLORIDA LICENSED SURVEYOR AND MAPPER.

McWhorter Rezoning

Additional Application Information

1. Application Fee: $3,000.00

Response: Hand Delivered

*Resubmital Fee: If substantial revisions are required as determined by the development review committee, all planning, zoning, and development applications shall be submitted within 60 days from the development review committee meeting at which the recommendations were made. After the 60 day time-frame a new application fee is required prior to any further city review.

Response: Acknowledged

Note: Additional costs incurred by the city engineer, city attorney, or outside consultants shall be billed directly to the applicant.

Response: Acknowledged

2. Completed application (signed and notarized affidavit).

Response: Attached (uploaded)

3. Owner authorization letter, notarized from the owner(s), designating the applicant/party to act on their behalf.

Response: Attached (uploaded)

4. List the owner's names and mailing addresses for all property lying within 300 feet surrounding the property, as recorded on the latest Official Tax Rolls. Lake County Property Appraisers. Provide written list (see attached) and provide list in Excel Spread Sheet Format and copy Excel spread sheet to CD with submittal packet.

Response: Attached (uploaded)

5. The Property Card(s) from the Lake County Property Appraiser's office.

Response: Attached (uploaded)

6. Future Land Use and Zoning Maps.

Response: Attached (uploaded)

7. Proof of ownership (warranty deed or title certificate).

Response: Attached (uploaded)

8. Boundary Survey signed and sealed (recent, accurate survey showing all existing improvements on the property and certified by the surveyor, drawn to engineering scale). Plus seven (2) extra copies of the boundary survey for the remaining packets.

Include one reduced survey copy not larger than 11” x 17” paper size, if the original survey is prepared on a large size paper.

Response: Attached (uploaded)

9. Legal description of the property in MS Word format (include in CD or email to staff).

Response: Attached (uploaded)

10. Traffic Impact Analysis, signed and sealed. Plus a PDF copy to CD.

Response: The Existing WP-1 Zoning and the Requested MU-1 Zoning are dependent on a vast array of varying allowed program elements for comparing the transportation impacts for sites. With no specific elements a transportation impact of existing conditions and proposed conditions would not adequately compare the traffic conditions.

11. Provide needs and justification for the change. Also, include zoning criteria pursuant to Section 3.3 of the City's land Development Code.

Response: Attached (uploaded)

12. Provide evidence and documentation of undeveloped land having the same classification as proposed the general area the throughout the City.

Response: No MU-1 Zoning appears of the latest Zoning Map.

13. The relationship of the proposed change in zoning to the purposes of the City's Comprehensive Plan and how the proposed change will further the purposes and intent to the Comprehensive Plan.

Response: This request is to align the requested Zoning with the Existing Future Land Use.

14. The relationship of the proposed change in zoning to the purposes of the City's Land Development Code and how the proposed change will further the purposes and intent to the Land Development Code.

Response: The Land Development Code requires consistent Future Land Use and corresponding Zoning.

15. The availability and provision of adequate services and facilities.

Response: This is an infill project within the City Limits with municipal services on multiple sides.

16. The impact on the natural environment.

Response: This site has had active commercial uses for many years.

PROPERTY RECORD CARD

General Information

Name:	MC WHORTER DANIEL C & JUDITH A	**Alternate Key:**	1797250
Mailing Address:	34804 ESTES RD EUSTIS, FL 32726 *Update Mailing Address*	**Parcel Number:**	29-19-27-0050-375-00001
		Millage Group and City:	0MD1 Mount Dora
		2021 Total Certified Millage Rate:	18.7017
		Trash/Recycling/Water/Info:	*My Public Services Map*
Property Location:	610 S HIGHLAND ST MOUNT DORA FL, 32757 *Update Property Location*	**Property Name:**	-- *Submit Property Name*
		School Information:	*School Locator & Bus Stop Map* *School Boundary Maps*
Property Description:	MOUNT DORA BEG 100 FT W OF NE COR OF BLK 376, RUN S 435.6 FT W 100 FT, S TO N'LY RR R/W, NW'LY ALONG N'LY RR R/W TO E R/W OF HIGHLAND AVE, N'LY ALONG SAID R/W TO NW COR OF BLK 375, E TO POB PB 3 PGS 37-43 ORB 3904 PGS 224 226 ORB 3950 PGS 464 466		

NOTE: This property description is a condensed/abbreviated version of the original description as recorded on deeds or other legal instruments in the public records of the Lake County Clerk of Court. It may not include the Public Land Survey System's Section, Township, Range information or the county in which the property is located. It is intended to represent the land boundary only and does not include easements or other interests of record. This description should not be used for purposes of conveying property title. The Property Appraiser assumes no responsibility for the consequences of inappropriate uses or interpretations of the property description.

Land Data

Line	Land Use	Frontage	Depth	Notes	No. Units	Type	Class Value	Land Value
1	SINGLE FAMILY (0100)	0	0		1.000	Acre	$0.00	$35,000.00
2	VACANT RESIDENTIAL (0000)	0	0		5.580	Acre	$0.00	$195,300.00

Click here for Zoning Info **FEMA Flood Map**

Residential Building(s)

Building 1

Residential	Building Value: $22,286.00

Summary

Year Built: 1903	Total Living Area: 1432	Central A/C: No	Attached Garage: No
Bedrooms: 3	Full Bathrooms: 1	Half Bathrooms: 1	Fireplaces: 0

Incorrect Bedroom, Bath, or other information?

Section(s)

Section Type	Ext. Wall Type	No. Stories	Floor Area
ENCLOSED PORCH WOOD (EPA)		2.00	152
FINISHED LIVING AREA (FLA)	Wood (01)	2.00	1432
OPEN PORCH UNFINISHED (OPU)		2.00	24

SCREEN PORCH FINISHED (SPF)	2.00	368

View Larger / Print / Save

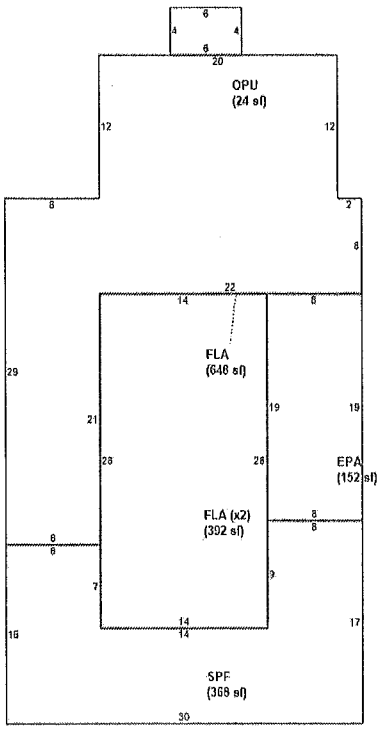

Miscellaneous Improvements

No.	Type	No. Units	Unit Type	Year	Depreciated Value
1	DETACHED GARAGE (DGF3)	468	SF	1938	$3,580.00
2	UTILITY BLDG UNFINISHED (UBU1)	186	SF	1938	$298.00
3	UTILITY BLDG UNFINISHED (UBU1)	216	SF	1938	$346.00
4	CARPORT/POLE SHED UNFINISHED (UCP1)	1788	SF	1938	$2,146.00
5	CARPORT/POLE SHED UNFINISHED (UCP1)	1320	SF	1919	$1,584.00

Sales History

NOTE: This section is not intended to be a complete chain of title. Additional official book/page numbers may be listed in the property description above and/or recorded and indexed with the Clerk of Court. Follow this link to search all documents by owner's name..

Book/Page	Sale Date	Instrument	Qualified/Unqualified	Vacant/Improved	Sale Price
3950 / 466	09/2010	Warranty Deed	Unqualified	Improved	$100.00
3950 / 464	09/2010	Warranty Deed	Unqualified	Improved	$100.00
3904 / 226	05/2010	Warranty Deed	Unqualified	Improved	$100.00
3904 / 224	05/2010	Warranty Deed	Unqualified	Improved	$100.00
1310 / 1745	06/1994	Warranty Deed	Unqualified	Improved	$0.00
896 / 550	10/1986	Warranty Deed	Unqualified	Improved	$1.00
825 / 1955	12/1984	Warranty Deed	Unqualified	Improved	$1.00

Click here to search for mortgages, liens, and other legal documents.

Values and Estimated Ad Valorem Taxes

Values shown below are 2022 WORKING VALUES.
The Market Value listed below is not intended to represent the anticipated selling price of the property and should not be relied upon by any individual or entity as a determination of current market value.

Tax Authority	Market Value	Assessed Value	Taxable Value	Millage	Estimated Taxes
LAKE COUNTY BCC GENERAL FUND	$260,540	$260,540	$260,540	5.0529	$1,316.48
SCHOOL BOARD STATE	$260,540	$260,540	$260,540	3.5940	$936.38
SCHOOL BOARD LOCAL	$260,540	$260,540	$260,540	2.9980	$781.10
LAKE COUNTY WATER AUTHORITY	$260,540	$260,540	$260,540	0.3229	$84.13
NORTH LAKE HOSPITAL DIST	$260,540	$260,540	$260,540	0.0000	$0.00
ST JOHNS RIVER FL WATER MGMT DIST	$260,540	$260,540	$260,540	0.2189	$57.03
CITY OF MOUNT DORA	$260,540	$260,540	$260,540	5.9603	$1,552.90
LAKE COUNTY MSTU AMBULANCE	$260,540	$260,540	$260,540	0.4629	$120.60
LAKE COUNTY VOTED DEBT SERVICE	$260,540	$260,540	$260,540	0.0918	$23.92
				Total: 18.7017	**Total:** $4,872.54

Exemptions Information

This property is benefitting from the following exemptions with a checkmark ✓

Homestead Exemption (first exemption up to $25,000)	Learn More	View the Law
Additional Homestead Exemption (up to an additional $25,000)	Learn More	View the Law
Limited Income Senior Exemption (applied to county millage - up to $50,000)	Learn More	View the Law
Limited Income Senior Exemption (applied to city millage - up to $25,000)	Learn More	View the Law
Limited Income Senior 25 Year Residency (county millage only-exemption amount varies)	Learn More	View the Law
Widow / Widower Exemption (up to $500)	Learn More	View the Law
Blind Exemption (up to $500)	Learn More	View the Law
Disability Exemption (up to $500)	Learn More	View the Law
Total and Permanent Disability Exemption (amount varies)	Learn More	View the Law
Veteran's Disability Exemption ($5000)	Learn More	View the Law
Veteran's Total and Permanent Disability Exemption (amount varies)	Learn More	View the Law
Veteran's Combat Related Disability Exemption (amount varies)	Learn More	View the Law
Deployed Servicemember Exemption (amount varies)	Learn More	View the Law
First Responder Total and Permanent Disability Exemption (amount varies)	Learn More	View the Law
Surviving Spouse of First Responder Exemption (amount varies)	Learn More	View the Law
Conservation Exemption (amount varies)	Learn More	View the Law
Tangible Personal Property Exemption (up to $25,000)	Learn More	View the Law
Religious, Charitable, Institutional, and Organizational Exemptions (amount varies)	Learn More	View the Law
Economic Development Exemption	Learn More	View the Law
Government Exemption (amount varies)	Learn More	View the Law

NOTE: Information on this Property Record Card is compiled and used by the Lake County Property Appraiser for the sole purpose of ad valorem property tax assessment administration in accordance with the Florida Constitution, Statutes, and Administrative Code. The Lake County Property Appraiser makes no representations or warranties

regarding the completeness and accuracy of the data herein, its use or interpretation, the fee or beneficial/equitable title ownership or encumbrances of the property, and assumes no liability associated with its use or misuse. See the posted Site Notice.

Copyright © 2014 Lake County Property Appraiser. All rights reserved.
Property data last updated on March 21, 2022.
Site Notice

PROPERTY RECORD CARD

General Information

Name:	MC WHORTHER DANIEL	**Alternate Key:**	2545232
Mailing Address:	34804 ESTES RD EUSTIS, FL 32726 *Update Mailing Address*	**Parcel Number:**	29-19-27-0050-385-00001
		Millage Group and City:	0MD1 Mount Dora
		2021 Total Certified Millage Rate:	18.7017
		Trash/Recycling/Water/Info:	*My Public Services Map*
Property Location:	ROBIE AVE MOUNT DORA FL, 32757 *Update Property Location*	**Property Name:**	-- *Submit Property Name*
		School Information:	*School Locator & Bus Stop Map* *School Boundary Maps*
Property Description:	MOUNT DORA BEG 435.6 FT S OF NE COR OF BLK 376, RUN W 200 FT, S & PARRALLEL WITH SIMPSON ST TO N'LY RR R/W, SE'LY ALONG RR R/W TO W'LY R/W SIMPSON ST, N TO POB, BEING PART OF BLKS 385 & 392 PB 3 PGS 37-43 ORB 643 PG 1848		

NOTE: This property description is a condensed/abbreviated version of the original description as recorded on deeds or other legal instruments in the public records of the Lake County Clerk of Court. It may not include the Public Land Survey System's Section, Township, Range information or the county in which the property is located. It is intended to represent the land boundary only and does not include easements or other interests of record. This description should not be used for purposes of conveying property title. The Property Appraiser assumes no responsibility for the consequences of inappropriate uses or interpretations of the property description.

Land Data

Line	Land Use	Frontage	Depth	Notes	No. Units	Type	Class Value	Land Value
1	VACANT RESIDENTIAL (0000)	348	200		69600.000	FD	$0.00	$42,427.00

Click here for Zoning Info **FEMA Flood Map**

Miscellaneous Improvements

There is no improvement information to display.

Sales History

NOTE: This section is not intended to be a complete chain of title. Additional official book/page numbers may be listed in the property description above and/or recorded and indexed with the Clerk of Court. Follow this link to search all documents by owner's name..

Book/Page	Sale Date	Instrument	Qualified/Unqualified	Vacant/Improved	Sale Price
643 / 1848	01/1978	Warranty Deed	Qualified	Vacant	$10,000.00

Click here to search for mortgages, liens, and other legal documents.

Values and Estimated Ad Valorem Taxes

Values shown below are 2022 WORKING VALUES.
The Market Value listed below is not intended to represent the anticipated selling price of the property and should not be relied upon by any individual or entity as a determination of current market value.

Tax Authority	Market Value	Assessed Value	Taxable Value	Millage	Estimated Taxes
LAKE COUNTY BCC GENERAL FUND	$42,427	$42,080	$42,080	5.0529	$212.63
SCHOOL BOARD STATE	$42,427	$42,427	$42,427	3.5940	$152.48
SCHOOL BOARD LOCAL	$42,427	$42,427	$42,427	2.9980	$127.20

LAKE COUNTY WATER AUTHORITY	$42,427	$42,080	$42,080	0.3229	$13.59
NORTH LAKE HOSPITAL DIST	$42,427	$42,080	$42,080	0.0000	$0.00
ST JOHNS RIVER FL WATER MGMT DIST	$42,427	$42,080	$42,080	0.2189	$9.21
CITY OF MOUNT DORA	$42,427	$42,080	$42,080	5.9603	$250.81
LAKE COUNTY MSTU AMBULANCE	$42,427	$42,080	$42,080	0.4629	$19.48
LAKE COUNTY VOTED DEBT SERVICE	$42,427	$42,080	$42,080	0.0918	$3.86
				Total: 18.7017	**Total:** $789.26

Exemptions Information

This property is benefitting from the following exemptions with a checkmark ✓

Homestead Exemption (first exemption up to $25,000)	Learn More View the Law
Additional Homestead Exemption (up to an additional $25,000)	Learn More View the Law
Limited Income Senior Exemption (applied to county millage - up to $50,000)	Learn More View the Law
Limited Income Senior Exemption (applied to city millage - up to $25,000)	Learn More View the Law
Limited Income Senior 25 Year Residency (county millage only-exemption amount varies)	Learn More View the Law
Widow / Widower Exemption (up to $500)	Learn More View the Law
Blind Exemption (up to $500)	Learn More View the Law
Disability Exemption (up to $500)	Learn More View the Law
Total and Permanent Disability Exemption (amount varies)	Learn More View the Law
Veteran's Disability Exemption ($5000)	Learn More View the Law
Veteran's Total and Permanent Disability Exemption (amount varies)	Learn More View the Law
Veteran's Combat Related Disability Exemption (amount varies)	Learn More View the Law
Deployed Servicemember Exemption (amount varies)	Learn More View the Law
First Responder Total and Permanent Disability Exemption (amount varies)	Learn More View the Law
Surviving Spouse of First Responder Exemption (amount varies)	Learn More View the Law
Conservation Exemption (amount varies)	Learn More View the Law
Tangible Personal Property Exemption (up to $25,000)	Learn More View the Law
Religious, Charitable, Institutional, and Organizational Exemptions (amount varies)	Learn More View the Law
Economic Development Exemption	Learn More View the Law
Government Exemption (amount varies)	Learn More View the Law

NOTE: Information on this Property Record Card is compiled and used by the Lake County Property Appraiser for the sole purpose of ad valorem property tax assessment administration in accordance with the Florida Constitution, Statutes, and Administrative Code. The Lake County Property Appraiser makes no representations or warranties regarding the completeness and accuracy of the data herein, its use or interpretation, the fee or beneficial/equitable title ownership or encumbrances of the property, and assumes no liability associated with its use or misuse. See the posted Site Notice.

Copyright © 2014 Lake County Property Appraiser. All rights reserved.
Property data last updated on March 21, 2022.
Site Notice

Rec 4.00
St 30.00
Sur 11.00
Ind

78 2089

O.R. BOOK 643 PAGE 1848

This Warranty Deed *Made the* 18th *day of* January *A. D.* 1978 *, by*

W. C. McWHORTER and wife, ALICE McWHORTER,

hereinafter called the grantor , to

✓ DANIEL C. McWHORTER and wife, JUDITH ANN McWHORTER,

whose post office address is Star Route Box 148, Blue Lake Road, Eustis, Fla. 32726
hereinafter called the grantee :

(Wherever used herein the terms "grantor" and "grantee" include all the parties to this instrument and the heirs, legal representatives and assigns of individuals, and the successors and assigns of corporations)

Witnesseth: *That the grantor, for and in consideration of the sum of $* 10.00 *and other valuable considerations, receipt whereof is hereby acknowledged, hereby grants, bargains, sells, aliens, remises, releases, conveys and confirms unto the grantee, all that certain land situate in* Lake *County, Florida, viz:*

That part of Blocks 385 and 392, according to the Plat of Mount Dora, recorded in Plat Book 3, pages 37 through 43, Public Records of Lake County, Florida, described as follows: From the Northeast corner of Block 376, according to said Plat, run South along the West right of way of Simpson Street 435.60 feet to an iron pipe and the point of beginning of this description; thence continue South along the West right of way of Simpson Street 367 feet, more or less, to the Northerly right of way of Seaboard Coast Line Railroad and a point hereby designated as Point "A", thence re urn to the point of beginning and run West, parallel to the North line of said Block 376 a distance of 200 feet to a concrete monument, thence run South, parallel to the West right of way of Simpson Street 320 feet, more or less, to the Northerly right of way of Seaboard Coast Line Railroad, thence run Southeasterly along said Northerly right of way 206.65 feet, more or less, to the herein designated Point "A".

LAKE COUNTY 6956

DEPT. OF FLORIDA JAN25'78 P.B. 10823 DOCUMENTARY SUR TAX 11.00

STATE OF FLORIDA DOCUMENTARY STAMP TAX DEPT. OF REVENUE JAN25'78 P.B. 10511 30.00

CLERK CIRCUIT COURT LAKE COUNTY

Together *with all the tenements, hereditaments and appurtenances thereto belonging or in anywise appertaining.*

To Have and to Hold, *the same in fee simple forever.*

And *the grantor hereby covenants with said grantee that the grantor is lawfully seized of said land in fee simple; that the grantor has good right and lawful authority to sell and convey said land; that the grantor hereby fully warrants the title to said land and will defend the same against lawful claims of all persons whomsoever; and that said land is free of all encumbrances, except taxes accruing subsequent to December 31, 1977*

In Witness Whereof, *the said grantor has signed and sealed these presents the day and year first above written.*

Signed, sealed and delivered in our presence:

Billie Davis
Rosa Mae Moore
Billie Davis
Mary Dora Fuller

W. C. McWhorter (LS)
W. C. McWhorter

(LS)

Alice McWhorter (LS)
Alice McWhorter

(LS)

RETURN 13

CFN 2010094266
Bk 03950 Pgs 0466 - 467; (2pgs)
DATE: 09/20/2010 10:29:09 AM
NEIL KELLY, CLERK OF COURT
LAKE COUNTY
RECORDING FEES 18.50
DEED DOC 0.70

PREPARED BY and RETURN TO:
JOHN H. FELDMAN
CAUTHEN & FELDMAN, P.A.
215 North Joanna Avenue
Tavares, FL 32778-3200

Parcel ID No. 29-19-27-005037500001

This document was prepared on information furnished by Grantor. No examination of title was requested by Grantee and no title examination has been made on the subject property.

WARRANTY DEED

THIS WARRANTY DEED is made the 14th day of September, 2010,

BY: **DANIEL C. McWHORTER**, a married man, whose address is 34804 Estes Rd., Eustis, FL 32736, ("Grantor"),

TO: **DANIEL C. McWHORTER** and **JUDITH A. McWHORTER,** his wife, whose address is 34804 Estes Rd., Eustis, FL 32736, ("Grantee");

{Wherever used herein the terms "grantor" and "grantee" include all the parties to this instrument and the heirs, legal representatives and assigns of individuals, and the successors and assigns of corporations.}

WITNESSETH: That Grantor, for and in consideration of the sum of Ten and No/100 Dollars ($10.00) and other valuable considerations, receipt whereof is hereby acknowledged, hereby grants, bargains, sells, aliens, remises, releases, conveys and confirms unto Grantee, all that certain land situate in **Lake County, Florida,** viz:

See attached "Exhibit A"

Subject to easements, restrictions, reservations and mortgages of record, if any, but not to reimpose any void or lapsed restrictions or easements.

This Corrective Warranty Deed is filed for the purpose of correcting the legal description of that Warranty Deed recorded in Official Records Book 3904, Page 226, Public Records of Lake County, Florida.

Neither the Grantor nor anyone dependent upon said Grantor, resides on the above described property, and the same does not constitute the Grantor's homestead as defined by the constitution or the laws of the State of Florida.

TOGETHER with all the tenements, hereditaments and appurtenances thereto belonging or in anywise appertaining.

TO HAVE AND TO HOLD, the same in fee simple forever.

AND Grantor hereby covenants with said Grantee that Grantor is lawfully seized of said land in fee simple; that Grantor has good right and lawful authority to sell and convey said land; that Grantor hereby fully warrants the title to said land and will defend the same against the lawful claims of all persons whomsoever; and that said land is free of all encumbrances, except taxes accruing subsequent to December 31, 2009.

IN WITNESS WHEREOF, Grantor has signed and sealed these presents the day and year first above written.

Signed in the Presence of

Melanie Schacht

Print or Type Name Melanie Schacht

Carolyn B. Baker

Daniel C McWhorter

DANIEL C. McWHORTER

Exhibit "A"

All of Blocks 375, 376 and 385, and that part of Block 391, 392 and 386, north of the railroad and bound on the north by Camp Avenue, on the east by Simpson Street, and on the west by Highland Street according to the plat of the Town of Mount Dora, Lake County, Florida, in Section 32, Township 19 South, Range 27 East, including all buildings located thereon, LESS that part of blocks 385 and 392, according to the plat of Mount Dora, recorded in Plat Book 3, pages 37 through 43, Public Records of Lake County, Florida, described as follows: From the Northeast corner of Block 376, according to said Plat, run South along the West right of way of Simpson Street 435.55 feet to an iron pipe and the point of beginning of this description; thence continue South along West right of way of Simpson Street 367 feet, more or less, to the northerly right of way of Seaboard Coast Line Railroad and a point hereby designated as Point "A," thence return to the point of beginning and run West, parallel to the North line of said Block 375 a distance of 200 feet to a concrete monument, thence run South, parallel to the West right of way of Simpson Street 320 feet, more or less to the Northerly right of way of Seaboard Coast Line Railroad, thence run Southeasterly along said Northerly right of way 206.65 feet, more or less, to the herein designated Point "A."

LESS

That part of Blocks 376 and 385, according to the Plat of Mount Dora, recorded in Plat Book 3, pages 37 through 43, Public Records of Lake County, Florida, described as follows: From the Northeast corner of said Block 376 run thence South along the East lines of Blocks 376 and 385 thereof a distance of 435.60 feet, thence run West and parallel to the North line of said Block 376 a distance of 100 feet, thence North and parallel to the East line of Blocks 376 and 385 a distance of 435.60 feet, thence East a distance of 100 feet to the point of beginning.

ATTACHMENT #2

CITY OF MOUNT DORA, FLORIDA
NOTICE OF PUBLIC HEARING
REQUEST FOR CHANGE IN ZONING

NOTICE is hereby given the Planning and Zoning Commission of the City of Mount Dora, Florida will hold a public hearing on **June 15, 2022, at 10:00 A.M.**, or as soon thereafter as possible at City Hall, 510 North Baker Street, Mount Dora, Florida to discuss the following:

> **REQUEST FOR CHANGE IN ZONING ASSIGNMENT FROM WP-1 (WORKPLACE) TO MU-1 (MIXED USE TRADITIONAL); 8.77 ACRES (SITE AREA); LOCATED ON THE SOUTHEAST CORNER OF HIGHLAND STREET AND CAMP AVENUE (LOCATION); DANIEL C. AND JUDITH ANN MCWHORTER (OWNERS); GREEN CONSULTING GROUP, INC. (APPLICANT)**

FURTHER, notice is hereby given City Council of the City of Mount Dora, Florida will hold first reading of the proposed Ordinance Number 2022-09 conducting a public hearing on **July 5, 2022, at 6:00 P.M.**, or as soon thereafter as possible at City Hall, 510 North Baker Street, Mount Dora, Florida pertaining to the above rezoning request.

These public hearings may be continued to a future date or dates. The times, places, and dates of any continuances of a public hearing shall be announced during the public hearing without any further published notice.

Interested parties may appear at the meeting and be heard with respect to the requested rezoning. The file may be inspected by the public at the Planning and Development Department, City Hall, 510 North Baker Street, Mount Dora, Florida between the hours of 8:00 a.m. and 5:00 p.m., Monday through Friday.

Notice: If any person decides to appeal any decision made at this meeting with respect to any matter considered at these meetings such person may need a record of these proceedings. For such purpose, a person may need to ensure that a verbatim record of the proceedings is made, which records include the testimony and evidence upon which the appeal is to be based.

Notice: In accordance with the American with Disabilities Act persons with disabilities needing special accommodations to participate in this proceeding shall contact the Planning and Development Department no later than seven (7) days prior to the proceedings. Telephone (352) 735-7112 for assistance. If hearing impaired, telephone the Florida Relay service numbers (800) 955-8771 (TDD), or (800) 955-8770 (Voice) for assistance.

For questions or comments, please email planningcomments@cityofmountdora.com

Legal Notice: June 3, 2022

NOTICE OF ZONING CHANGE
CITY OF MOUNT DORA, FLORIDA

Notice is hereby given that the City Council of the City of Mount Dora, Florida proposes to adopt the following Ordinance No. 2022-09 for the lands within the area shown in the map in this advertisement.

ORDINANCE NO: 2022-09

AN ORDINANCE OF THE CITY OF MOUNT DORA, FLORIDA, PERTAINING TO THE ZONING DISTRICT CLASSIFICATION CHANGE FOR THAT PROPERTY LOCATED ON THE SOUTHEAST CORNER OF HIGHLAND STREET AND CAMP AVENUE; PROVIDING FOR LEGISLATIVE FINDINGS AND INTENT; PROVIDING FOR ZONING DISTRICT CLASSIFICATION CHANGE; PROVIDING FOR OFFICIAL ZONING MAP AMENDMENT; PROVIDING FOR IMPLEMENTATION OF ADMINISTRATIVE ACTIONS; PROVIDING A SAVINGS CLAUSE; PROVIDING FOR NON-CODIFICATION AND SCRIVENER'S ERRORS; PROVIDING FOR CONFLICTS; PROVIDING FOR SEVERABILITY; AND PROVIDING AN EFFECTIVE DATE.

A public hearing on the change in zoning will be held on **Tuesday, July 5, 2022 at 6:00 p.m.**, or as soon thereafter as possible at City Hall, 510 North Baker Street, Mount Dora, Florida.

Interested parties may appear at the above meeting and be heard with respect to the proposed rezoning.

This public hearing may be continued to a future date or dates. The times, places, and dates of any continuances of a public hearing shall be announced during the public hearing without any further published notice.

The proposed ordinance may be inspected by the public at the Planning and Development Department, City Hall, 510 North Baker Street, Mount Dora, Florida between the hours of 8:00 AM and 5:00 PM, Monday through Friday.

Notice: If any person decides to appeal any decision made at this meeting with respect to any matter considered at this meeting such person may need a record of these proceedings. For such purpose, a person may need to ensure that a verbatim record of the proceedings is made, which records include the testimony and evidence upon which the appeal is to be based.

Notice: In accordance with the American with Disabilities Act persons with disabilities needing special accommodations to participate in this proceeding shall contact the Planning and Development Department no later than seven (7) days prior to the proceedings. Telephone (352) 735-7112 for assistance. If hearing impaired, telephone the Florida Relay service numbers (800) 955-8771 (TDD), or (800) 955-8770 (Voice) for assistance.

Title in 18 point
2 column, 10.5 inch; Non-legal
Publish Date: June 24, 2022

ORDINANCE NO: 2022-09

AN ORDINANCE OF THE CITY OF MOUNT DORA, FLORIDA, PERTAINING TO THE ZONING DISTRICT CLASSIFICATION CHANGE FOR THAT PROPERTY LOCATED ON THE SOUTHEAST CORNER OF HIGHLAND STREET AND CAMP AVENUE; PROVIDING FOR LEGISLATIVE FINDINGS AND INTENT; PROVIDING FOR ZONING DISTRICT CLASSIFICATION CHANGE; PROVIDING FOR OFFICIAL ZONING MAP AMENDMENT; PROVIDING FOR IMPLEMENTATION OF ADMINISTRATIVE ACTIONS; PROVIDING A SAVINGS CLAUSE; PROVIDING FOR NON-CODIFICATION AND SCRIVENER'S ERRORS; PROVIDING FOR CONFLICTS; PROVIDING FOR SEVERABILITY; AND PROVIDING AN EFFECTIVE DATE.

WHEREAS, Daniel C. and Judith Ann McWhorter, as the fee simple owners of the property submitted an application to the City of Mount Dora requesting a zoning district classification change and a Zoning Map amendment for that property located on the southeast corner of Highland Street and Camp Avenue, as depicted in **Exhibit "A"** (Property); and

WHEREAS, the requested zoning district classification change and Zoning Map amendment are consistent with the City of Mount Dora Comprehensive Plan and meet the criteria established by Florida Statutes, Chapter 166; and

WHEREAS, pursuant to applicable law, notice has been given to Lake County and to the public by publication in a newspaper of general circulation in the City; and

WHEREAS, on June 15, 2021, the City of Mount Dora Planning and Zoning Commission approved the requested zoning district classification change and Zoning Map Amendment; and

WHEREAS, the City of Mount Dora held a duly noticed public hearing on the proposed zoning district classification change for the Property to Mixed Use Traditional (MU-1), considered the findings and advice of staff and considered the written information, oral comments and supporting data and analysis provided by citizens and all interested parties; and

WHEREAS, the City of Mount Dora finds such zoning district classification change and Zoning Map amendment serves a legitimate public purpose and is in the best interest of the health, safety and welfare of the citizens of the City of Mount Dora, Florida.

NOW, THEREFORE, BE IT ORDAINED BY THE CITY OF MOUNT DORA, FLORIDA:

SECTION 1. **LEGISLATIVE FINDINGS AND INTENT.** The City of Mount Dora has complied with all requirements and procedures of Florida law in processing this Ordinance. The above recitals are hereby adopted as legislative findings and intent of the City of Mount Dora.

SECTION 2. **ZONING DISTRICT CLASSIFICATION CHANGE.** Pursuant to City of Mount Dora Land Development Code, Chapter III, the Property as more particularly described below is hereby rezoned and assigned the Mixed Use Traditional (MU-1) zoning classification:

All of Blocks 375, 376 and 385, and that part of Block 391, 392, and 386, north of the railroad and bound on the north by Camp Avenue, on the east by Simpson Street, and on the west by Highland Street according to the plat of the Town of Mount Dora, Lake County, Florida, in Section 32, Township 19 South, Range 27 East, including all buildings located thereon,

LESS that part of Blocks 385 and 392, according to the plat of Mount Dora, recorded in Plat Book 3, pages 37 through 43, Public Records of Lake County, Florida, described as follows: From the Northeast corner of Block 376, according to said Plat, run South along the West right-of-way of Simpson Street 435.55 feet, to an iron pipe and the point of beginning of this description; thence continue South along West right-of-way of Simpson Street 367 feet, more or less, to the northerly right-of-way of Seaboard Coast Line Railroad and a point hereby designated as Point "A", thence return to the point of beginning and run West, parallel to the North line of said Block 375 a distance of 200 feet to a concrete monument, thence run South, parallel to the West right-of-way line of Simpson Street 320 feet, more or less to the Northerly right-of-way of Seaboard Coast Line Railroad, thence run Southeasterly along said Northerly right-of-way 206.65 feet, more or less, to the herein designated Point "A".

And less that part of Blocks 376 and 385, according to the Plat of Mount Dora, recorded in Plat Book 3, pages 37 through 43, Public Records of Lake County, Florida, described as follows: From the Northeast corner of said Block 376 run thence South along the East lines of Blocks 376 and 385 thereof a distance of 435.60 feet, thence run West and parallel to the North line of said Block 376 a distance of 100 feet, thence North and parallel to the East line of Blocks 376 and 385 a distance of 435.60 feet, thence East a distance of 100 feet to the point of beginning.

Parcel 2

That part of Blocks 385 and 392, according to the plat of Mount Dora, recorded in Plat Book 3, pages 37 through 43, Public Records of Lake County, Florida, described as follows: From the Northeast corner of Block 376, according to said Plat, run South along the West right-of-way of Simpson Street 435.55 feet, to an iron pipe and the point of beginning of this description; thence continue South along West right-of-way of Simpson Street 367 feet, more or less, to the northerly right-of-way of Seaboard Coast Line Railroad and a point hereby designated as Point "A", thence return to the point of beginning and run West, parallel to the North line of said Block 375 a distance of 200 feet to a concrete monument, thence run South, parallel to the West right-of-way line of Simpson Street 320 feet, more or less to the Northerly right-of-way of Seaboard Coast Line Railroad, thence run Southeasterly along said Northerly right-of-way 206.65 feet, more or less, to the herein designated Point "A".

CONTAINING 382,073.20 SQUARE FEET OR 8.77 ACRES MORE OR LESS.

SECTION 3. **OFFICIAL ZONING MAP AMENDMENT.** The Official City Zoning Map of the City of Mount Dora shall be amended to conform to the zoning assignment approved in Section 2 of this Ordinance.

SECTION 4. **IMPLEMENTING ADMINISTRATIVE ACTIONS.** The City Manager is hereby authorized and directed to take such actions as are deemed necessary and appropriate in order to implement the provisions of this Ordinance. The City Manager may, as deemed appropriate, necessary and convenient, delegate the powers of implementation as herein set forth to such City employees as deemed effectual and prudent.

SECTION 5. **SAVINGS CLAUSE.** All prior actions of the City of Mount Dora pertaining to the zoning district classification change and Zoning Map amendment related to the Property, as well as any and all matters relating thereto, are hereby ratified and affirmed consistent with the provisions of this Ordinance.

SECTION 6. **NON-CODIFICATION AND SCRIVENER'S ERRORS.** The provisions of this Ordinance shall not be codified in the City of Mount Dora Code of Ordinances. Typographical errors and other matters of a similar nature that do not affect the intent of this Ordinance, as determined by the City Clerk and City Attorney, may be corrected.

SECTION 7. **CONFLICTS.** All Ordinances or parts of Ordinances in conflict with any of the provisions of this Ordinance are hereby repealed.

SECTION 8. **SEVERABILITY.** If any Section or portion of a Section of this Ordinance proves to be invalid, unlawful, or unconstitutional, it shall not be held to invalidate or impair the validity, force, or effect of any other Section or part of this Ordinance.

SECTION 9. **EFFECTIVE DATE.** This Ordinance shall become effective immediately upon adoption.

Signatures on Following Page

FIRST READING: _____

SECOND READING: _____

PASSED AND ADOPTED this _____ day of _____, 2022.

_____
CRISSY STILE
MAYOR of the City of Mount Dora, Florida

ATTEST:

_____
JESSICA BURNHAM
CITY CLERK

For the use and reliance of
City of Mount Dora only.
Approved as to form and legality.

_____
Sherry G. Sutphen
City Attorney

Exhibit "A"

McWhorter
Change In Zoning
8.77 Acres

N

N.T.S.

Legend

Subject Property

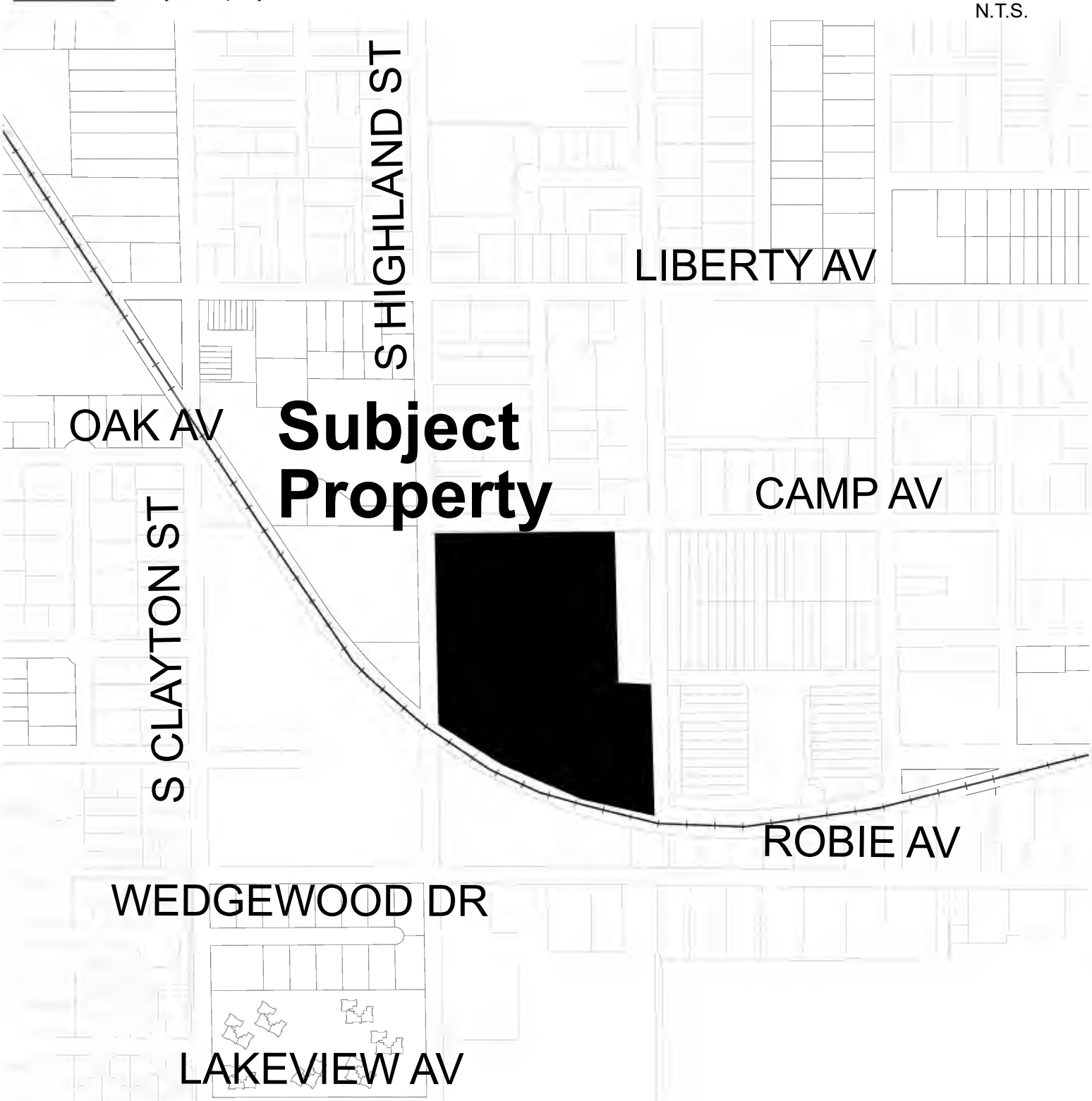

Date: 5/5/2022

Prepared by: Mount Dora Planning and Development Dept * 510 N. Baker Street, Mount Dora, FL 32757 * 352-735-7112

CITY OF MOUNT DORA

510 N. Baker St.
Mount Dora, FL 32757
352-735-7126

DATE: **July 5, 2022**

TO: **Honorable Mayor and City Council Members**

FROM: **Patrick C. Comiskey, City Manager** Patrick C. Comiskey

SUBJECT: City Manager's Update

Introduction:
This is an opportunity for the City Manager to provide an update to City Council.

Discussion:
The following documents are provided for informational purposes:

- Fire Station #35 Contingency Request to install concrete curbs in the restrooms in accordance with direction provided on 5/4/2022 (Attachment #1)
- Cauley Lott Park Contingency Request for Site Furnishing Final Selections (Attachment #2): The original site furnishing items in the document had lead times that exceeded the allowable time for the project and alternates were selected which would be available within the allowable time frame.
- Cauley Lott Park Contigency Request for Steel Changes (Attachment #3): The original steel package included items that had lead times that exceeded the allowable time for the project and alternates were selected which would be structurally appropriate and available within the allowable time frame.
- Summerview Pickleball Courts Task Authorization (Attachment #4): Pre-construction services were authorized to begin on the pickleball courts project.

Budget Impact:
N/A

Strategic Impact:
N/A

Recommendation:

Information only.

Attachment(s):

1. Attachment #1 - Fire Station 35 Contingency Request - Added Concrete Curbs in Showers
2. Attachment #2 - Cauley Lott Park Contingency Request for Site Furnishing Final Selections
3. Attachment #3 - Cauley Lott Park Contingency Request Steel Changes
4. Attachment #4 - Summerview Pickleball Courts Task Authorization for Pre-Construction Services

Prepared by:	Merry Lovern , Executive Assistant	
Reviewed by:	Jessica Burnham, City Clerk	Approved - 6/29/2022
	Jeanann Hand, Deputy City Clerk	Approved - 6/29/2022
	Patrick Comiskey, City Manager	Final Approval - 6/29/2022

ATTACHMENT #1

Wharton-Smith, Inc.
CONSTRUCTION GROUP

June 27, 2022

City of Mount Dora
Mr. Chet Cramer, Construction Project Manager
510 N Baker Street
Mount Dora, FL 32757

Mount Dora Fire Station No. 35 Contingency Request 03

Summary of Work:

Provide materials and labor necessary to install the added concrete curbs in the restrooms, in strict accordance with the RFI 028 response direction dated 05/04/2022.

Contingency Log

CR No.	Date	Description	CR Amount	Contingency Balance	CR Status	Reason
01	4/13/2022	Revision #2 Additions/Changes	$ 19,374.34	$ 105,027.66	Approved 06.09.22	Added lighting/electrical scope related to the additions and changes noted in the Revision #2 documents.
02	5/23/2022	Added Casework Shelving per RFI 026	$ 3,695.00	$ 101,332.66	Approved 06.02.23	Added casework shelving and mail slots in Report Writing room 103 per COMD request and RFI 026 response
03	6/27/2022	Added Concrete Cubs at Showers 105, 106, 119, 101	$ 2,193.36	$ 99,139.30	Pending	Added concrete curbs in the showers per the AOR direction in RFI 028

Starting Contingency Balance	$ 124,402.00
Remaining Balance	$ 99,139.30

Approval Signature: Patrick Connolly

Date: June 28, 2022

Requested By: Jeffery Williams

Date: 06/27/2022

750 Monroe Road, Sanford, FL 32771 I Phone: (407) 321-8410

AL – 45684 I FL – CG C1511243 I GA – GCCO 001333 I LA – 52227 I MS – 18232MC I NC – 38755 I SC – G97817 I TN – 62419 I VA – 270S121584A

VMG CONSTRUCTION INC.
TILT WALLS - C.I.P. - SLABS

43 1st Street Winter Garden, FL 34787 Phone (407) 347-9536

Ch

Change Order Proposal

NO. : 3

CIVIL: **COMMERCIAL:** **INDUSTRIAL:**

PROJECT: City of Mount Dora Fire Station #35 **Vendor**

PROJECT NO.:

DATE: 15-Jun-22

clVIL: 0

DRAWING NO.:

Owner: 0

SPEC. SECTION: N/A

GC: Wharton Smith

REFERENCE: **RFP NO.:** **RFI NO:** **N/A** **ELD ORDER NO.:** **OTHER:**

Description

RFI# 028 Shower curb detail.Detail applies to rooms 105, 106, 119, 101. remobilize after rooms 105,16,101 are poured. Layout, Drill and epoxy #3 rebar with 3" embedment at 24" O.C using Hilti Epoxy 200. Tie 1 #4 continous along curbs. Inspect holes before epoxy. Layout curbs Form with 2x4x16 and kickers. Rub and patch curb or sponge finish curb. Strip and remove all forms. EXCLUDE: Mud slab,Sealant, Fluid Applied Weather Barrier.

P R I C I N G I N F O R M A T I O N

1. DIRECT LABOR:	**SKILL/TRADE**	**MAN-HOURS**		**RATE**	**COST**
DIRECT LABOR	Carpenter	4	MH	$ 41.20	$ 164.80
NOTES/ REMARKS	Carpenter helper	1	MH	$ 35.50	$ 35.50
	Labor	0	MH	$ 29.40	$ -
	Working Foreman	4	MH	$ 44.60	$ 178.40
	Concrete Finisher	5	MH	$ 42.20	$ 211.00
	Reinforcing Steel Installer	0	MH	$ 44.00	$ -
	Project Manager	0	MH	$ 68.00	$ -
	Surveyor/ Layout	0	MH	$ 72.00	$ -
			SUBTOTAL (1)		$ 589.70

2. MATERIALS	**DESCRIPTION**	**QUANITY**		**UNIT PRICE**	**COST**
NOTES/ REMARKS	Concrete	2.00	QTY	$ 140.00	$ 280.00
	Reinforcement Rebar / Tag, Bundle	0.098	TON	$ 1,800.00	$ 176.40
	Plywood Material 4x8 sheets	0	QTY	$ 2.50	$ -
	Soil Treatment	0	SF	$ 0.19	$ -
	Vapor Barrier	0	SF	$ 0.24	$ -
	Short load fee less than 7CY	1	QTY	$ 350.00	$ 350.00
	2x4x16	9	QTY	$ 16.38	$ 147.42
	Scupper	0	QTY	$ 285.00	$ -
	Epoxy 200	5	QTY	$ 65.75	$ 328.75
	Engineering	0	LS	$ -	$ -
				LS	$ -
			SUBTOTAL (2)		$ 1,282.57

3. EQUIPMENT	**DESCRIPTION**	**QUANITY**		**UNIT PRICE**	**COST**
NOTES/ REMARKS	Mini Excavator	0	WK	$ 827.00	$ -
	Forklift 6k 42' Reach	0	WK	$ 1,105.00	$ -
	Man Lift 60' reach	0	WK	$ 1,200.00	$ -
	Skid Steer 1900lb T590	0	WK	$ 1,120.00	$ -
	Plate Compactor	0	WK	$ 270.00	$ -
	Power Buggy	0	WK	$ 920.00	$ -
	Light Towers	0	WK	$ 430.00	$ -
	Scissor Lift	0	WK	$ 320.00	$ -
	Air Compressor /Hose /Blow Pipe	0	WK	$ 700.00	$ -
	Concrete Pump	0	HR	$ 450.00	$ -
	Bonds and Insurance 1.5% if Bonded Job			LS	See Below
			SUBTOTAL (2)		$ -

FEE STRUCURE	**NAME**	**DESCRIPTION OF WORK**			**COST**
			%	**Tax**	
1. Direct Labor		$ 589.70	6.5%	$ 38.33	$ 628.03
2. Material		$ 1,282.57	6.5%	$ 83.37	$ 1,365.94
3. Equipment		$ -	6.5%	$ -	$ -
				10% OHP	$ 199.40
		BOND IF BONDED JOB			$ -
			VMG TOTAL		**$ 2,193.36**

VMG\FORMS\CONS.

[Print] [Close]

Date:	05/02/2022	**RFI #:**	028
To:	ADG ARCHITECTURE, LLC	**Required by:**	05/09/2022
Attention:	Hector Caraballo	**Phone:**	407-647-1706
Project:	City of Mount Dora FS 35	**Project #:**	21-147
By:	Duncan Graham, Project Engineer		

Subject:	Shower Curbing Detail
Ref:	11/ID-205

Information Request / Description:

Per discussions with WSI/ADG/COMD in the OAC meeting on 04/21/2022, it was noted that there are not any details in the drawings regarding a shower curb to separate the shower floor from the restroom floor. Please advise if we are to install shower curbs at all shower locations. If yes, please also provide finish details for tiling at the added curbs.

Suggestion:

DialogAttachment:

- RFI 028 Markup
https://redteam.link/cn84v0i

RESPONSE TO RFI #028

Responded By:	Hector Caraballo, *Construction Administration* **ADG ARCHITECTURE, LLC**
Returned Date:	05/04/2022
Answer:	In response to RFI#28, see attached sheet A-143 Curb Plan-Details, to be issued at later date in upcoming REV.4.

Attachment:

- A-143 CURB PLANS & DETAILS
https://redteam.link/rxjz32f

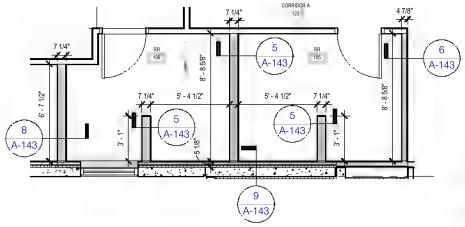

1 CURB PLAN - RR 105 & 106
1/4" = 1'-0"

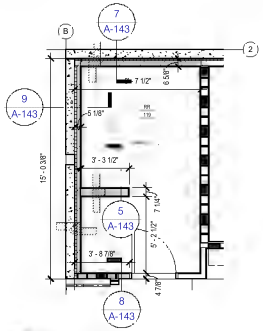

2 ENLARGED RR 119
1/4" = 1'-0"

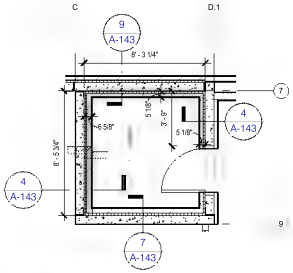

3 ENLARGED RR 101
1/4" = 1'-0"

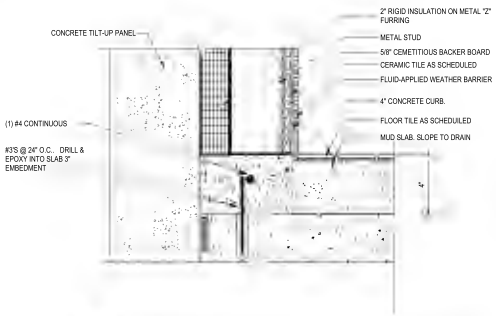

4 CURB SECTION 1
3" = 1'-0"

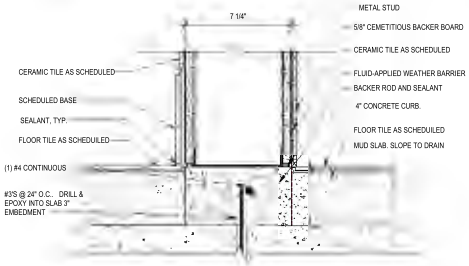

5 CURB SECTION 2
3" = 1'-0"

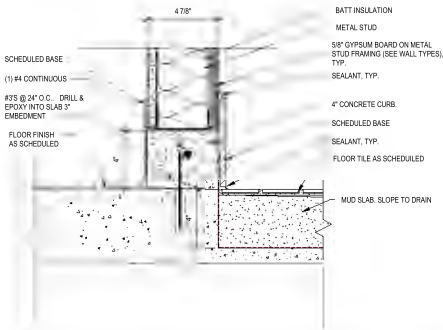

6 CURB SECTION 3
3" = 1'-0"

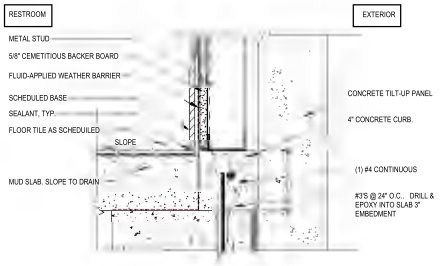

7 CURB SECTION 4
3" = 1'-0"

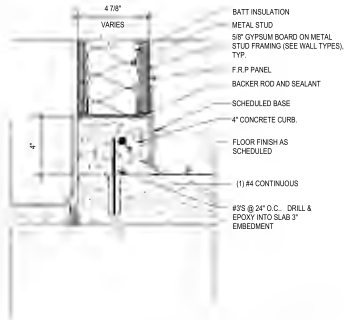

8 CURB SECTION 5
3" = 1'-0"

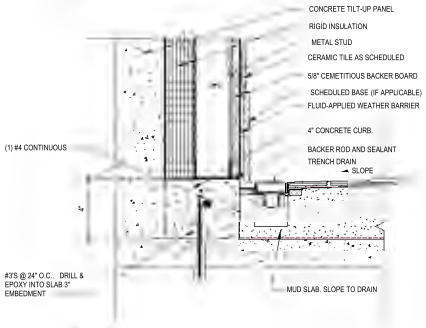

9 CURB SECTION 6
3" = 1'-0"

Architects Design Group

Architects and Planners
I.S.K. Reeves V, F.A.I.A.
Ian A. Reeves, A.I.A.
Susan Gantt, A.I.A., LEED-AP

333 N. Knowles Ave.
Winter Park, Florida 32789
P: (407) 647-1706

Qualifying Architect's
Number: AR94944

MOUNT DORA FIRE STATION NO. 35

CITY OF MOUNT DORA

BID & PERMIT DOCUMENTS

The architect hereby expressly reserves his common law copyright and other property rights in these drawings. These drawings shall not be reproduced without written permission and consent of the architect, nor are they to be assigned to any party without first obtaining written permission and consent.

• revisions/addenda

Number	Description	Date Issued
4	RFI'S	TBD

4 RFI 028

• sheet title
CURB PLANS & DETAILS

• scale: As indicated
• drawn: LG
• checked: LG
• approved: LG
• date: 10/18/2021

• project no.
1040

• sheet number:
A-143

ATTACHMENT #2

EVERGREEN
CONSTRUCTION

June 23, 2022

City of Mount Dora
210 North Baker Street
Mount Dora, Florida 32757
Attention: Mr. Chet Cramer

RE: Contingency Request #01
Cauley Lott Park
City of Mount Dora, Florida

Sir,

Evergreen CM is pleased to provide our Contingency Request for General Conditions.

Description of Request, Cost and Time Impact
This change is related to changes to site furnishings for the Cauley Lott Park project.

This proposal includes cost to provide final selections of site furnishings per architect. Specifically excluded are the cost of building permit, performance and payment bond, and builder's all-risk insurance.

Enclosed is our itemized Contingency Request Cost Summary including subcontractor backup in the amount of $9,139.00.

We request a time extension to our substantial completion date of 0 days.

Sincerely,
Evergreen Construction

Shawn Howard
Project Manager

Approved By:
City of Mount Dora

Patrick C. Comiskey, City Manager

June 28, 2022
Date

Evergreen Construction Management, Inc.
www.evergreencm.net

30941 Suneagle Drive
Mount Dora, Florida 32757
352.227.1460

EVERGREEN CONSTRUCTION

Contingency Request #1
Estimate Cost Summary
Description of work:

Date Submitted: 6/23/2022
Project Name: Cauley Lott Park
Location: Mt Dora FL
Client: City of Mt Dora

Division	Scope	Source of Cost	Quantity	Unit	Unit Cost	Total Cost
05 45 00 S	Changes in Site Furnishings	Advance Welding	1	LS	9,139.00	9,139.00
	DuMor Bench #58-50 (color "Deep Red") – 4 each					
	DuMor Bike Rack #188-09 (color "Deep Red") – 2 each					
	DuMor Trash Receptacle #102-32SH (color "Deep Red") – 5 each					
	DuMor Picnic Table #100-60PL (recycled plastic / black frame) – 6 each					
	DuMor Grill #24-00, (Color Black) – 1 each					
Subtotal						**$9,139.00**
	General Liability				1.3%	0.00
	Bond					nic
Subtotal						**$9,139.00**
	Construction Management Fee				5.0%	
Total	**Contingency Amount Requested**					**$9,139.00**

May 25, 2022

City of Mount Dora
510 North Baker Street
Mount Dora, Florida 32757

Attention: Mr. Chet Cramer

RE: Change Order Request #1
Cauley Lott Park Renovation

Change Order Request for additional scope as itemized below:

Revise site furnishings as follows:

- DuMor Bench #58-50 (color "Deep Red") – 4 each
- DuMor Bike Rack #188-09 (color "Deep Red") – 2 each
- DuMor Trash Receptacle #102-32SH (color "Deep Red") – 5 each
- DuMor Picnic Table #100-60PL (recycled plastic / black frame) – 6 each
- DuMor Grill #24-00, (Color Black) – 1 each

All furniture to be surfaced mounted except for the barbeque grill which will be embedded in concrete.

Deduct original site furnishings estimate amount	($42,192)
Add for revised scope per Rep Services (quote attached)	$51,331
Net Additional Cost	$ 9,139
Previous Contingency	$96,165
Draw COR #1 from Contingency	($ 9,139)
Revised Contingency	$87,026
Change Order Request	**$0**

Evergreen Construction Management, Inc.
www.evergreencm.net

30941 Suneagle Drive
Mount Dora, Florida
32757
352.227.1460

EVERGREEN
CONSTRUCTION

If you should have any questions regarding this request, please do not hesitate to contact the undersigned.

Sincerely,
Evergreen Construction
Richard Charleson

Approved By:
City of Mount Dora

Title City Manager

Signature Patrick Comisky

Date: June 28, 2022

Evergreen Construction Management, Inc.
www.evergreencm.net

30941 Suneagle Drive
Mount Dora, Florida
32757
352.227.1460

REP SERVICES, INC.
Experts at Play & Outdoor Spaces
Site Amenities ■ Playground Equipment ■ Safety Surfacing ■ Shade
Phone: 407.831.9658 Fax: 866.232.8532 E mail: sales@repservices.com

Please mail POs, contracts and checks to:
Rep Services, Inc.
165 W. Jessup Ave.
Longwood, FL 32750-4146

Proposed To: Evergreen Construction Management, Inc. 600 Market St. Leesburg, FL 34749 **Attn:** Richard Charleson	**Ship To:** Cauley Lott Park Renovation 1717 N Highland St Mount Dora, FL 32757 **Attn:** John Bosgraaf	**Bill To:** Evergreen Construction Management, Inc. 600 Market St. Leesburg, FL 34749 **Attn:** Richard Charleson

Project No: 18541
Proposal No: 18541.15
Proposal Date: 5/25/2022
Project Name: Cauley Lott Park Renovation
Proposal Name: Cauley Lott Park Site Furnishing COR
Proposal Expires: 6/24/2022
Project Contact: Richard Charleson
Project Location: 1717 N Highland St
Mount Dora, FL 32757
Project County: Lake

For Questions Contact: Shela Brown ☎ 407-853-3558 ✉ shela@repservices.com
Consultant: Mary Langley ☎ 407-853-3563 ✉ mary@repservices.com **Opt/Rev:** D/6 **Printed:** 5/25/22 - SA

Vendor: DuMor **Proj Drawings:** DUM 583243

Class	Part No	Qty	Description	Unit Price	Net Price	Ext Price
Benches	58-60	4 EA	6' Cast Bench, Steel Seat	1,581.00	1,581.00	6,324.00
Bike Racks	188-09	2 EA	All-Steel Bike Rack, 9-Openings	1,181.00	1,181.00	2,362.00
	SM-188	2 EA	S-2 Surface Mount for 188 Bike Rack	141.00	141.00	282.00
Grills	24-00	1 EA	Dual-Level Grill For Embedment	941.00	941.00	941.00
Receptacles	287-32SH	5 EA	32 Gal Steel Receptacle W/ Shield	2,337.00	2,337.00	11,685.00
Tables	100-60PL	6 EA	6' Table, Recycled Plastic	2,657.00	2,657.00	15,942.00

Product Subtotal:		$37,536.00
Florida Sales Tax:	6.00%	$2,252.16
Local Option Tax for Lake County:	1.00%	$50.00
Freight: Prepaid Ship Method: Best Way FOB: Destination Weight: 6,664 lbs Freight Charge:		$3,322.35
DuMor Total:		$43,160.51

Vendor: RSI Installer 583041

Item	Qty	Description	Unit Price	Ext Price
INS-DUM	1 LT	Equipment Installation - DuMor 6 Tables, 4 Benches, 2 bike rackd, 5 Receptacles All surface mount. 1 Embedded Grill Concrete by others	8,170.00	8,170.00
		RSI Installer Total:		$8,170.00

General Terms of Sale and Proposal Summary

100% of product prior to fabrication

Product:	$37,536.00
Installation:	$8,170.00
Grand Total Tax:	$2,302.16
Freight:	$3,322.35
Proposal Total:	$51,330.51

Notes

Basis of Proposal:
Our proposal is based upon your email request

Please note the vendor requirements itemized below.

Also, please be aware that we generate separate invoices for product at the time of delivery, then we invoice for installation upon completion. This is the customary approach in construction and eliminates sales tax on installation services. If your project should include products from multiple manufacturers, be advised that the products will be invoiced separately.

If, during the performance of this contract, the price of an input increases 3% or more as documented by factory quotes, invoices or receipts to contractor (Rep Services, Inc.) from the date of the contract signing the price of shall be equitably adjusted by an amount reasonably necessary to cover such price increases. Where the delivery of *an input* is delayed, through no fault of contractor (RSI) as a result of the shortage or unavailability of an input, contractor (RSI) shall not be liable for any additional costs or damages associated with such delay(s).

(This schedule starts when all needed information to direct engineering has been gathered.)
16 Weeks Longest manufacturing lead time. (Typical for scheduling.)
1 Week Shipping
Note that RSI is committed to do all it can to meet the needs of your project.

DuMor Site Furnishings:
Color Selection:
Bench:
Type Bench 58-60
Color Deep Red
Bike Rack:
Type 188-09
Color Deep Red
Trash receptacle:
Type Receptacle 102-32SH
Color Deep Red
Picinic Table:
Type 100-60PL
Color Recycled Plastic CEDAR Frame BLACK
All above furniture to be SURFACE MOUNTED

Grill
Type 24-00
Color Black
Direct Bury

NOTES: for product-only orders be aware of the following:
- Some products require assembly.
- Shipments are via semi trailer. If you require a lift gate and pallet jack delivery, additional fees will be assessed.

Installation:
Unless otherwise noted, the following items are to be *PROVIDED BY CUSTOMER* prior to installation:

To Be Provided by customer:
- Access for machines and labor crew to equipment installation location.
- Storage or Staging area.
- Signed & sealed site plan or survey.
- All site work, site preparation and base preparation.
- Private underground utilities located and marked prior to installation.
- Sod & Landscape Restoration.
- Soils testing.
- Geotechnical Report.
- Tree survey.
- Site security.
- Dumpster.
- Water and 110 Electric.
- Dewatering and drainage considerations.
- Concrete testing.

Installation Charges on this proposal are based on NO UNFORESEEN conditions in the area, above or below the surface. If unforeseen conditions arise, the installation charges will change to reflect additional costs associated with dealing with those circumstances. Examples of this include, but are not limited to: site not ready upon installer's arrival, underground utilities, or difficulties with footers due to coral rock or ground water in the holes.

The undersigned warrants that he/she is an authorized representative of the company noted and has the requisite authority to bind said company and/or principal. If any particular billing is not paid when due, all outstanding balances, regardless of prior terms, will become immediately due and owing upon demand. Interest on past due amounts will be assessed at 1 ½ % per month or the maximum interest rate permitted by applicable law, whichever is less. Should it become necessary for either party to this contract to institute legal action for enforcement of any provisions of this contract, the prevailing party shall be entitled to reimbursement for all court costs and reasonable attorney's fees incident to such legal action. The parties hereto agree that proper venue for any legal action in any way related to this contract shall be in Seminole County, FL.

Accepted By:

Evergreen Construction Management, Inc.			
Company Name	Authorized By	Printed Name	Date

As Its: _____ (Title)

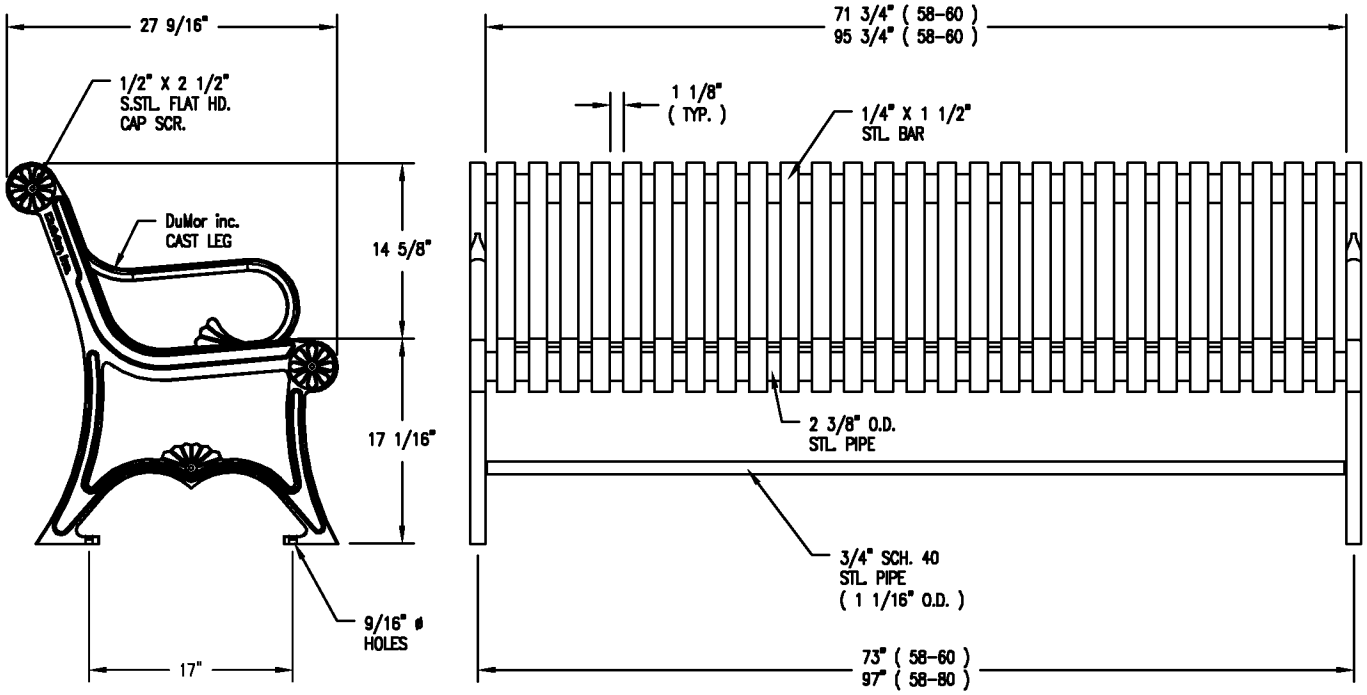

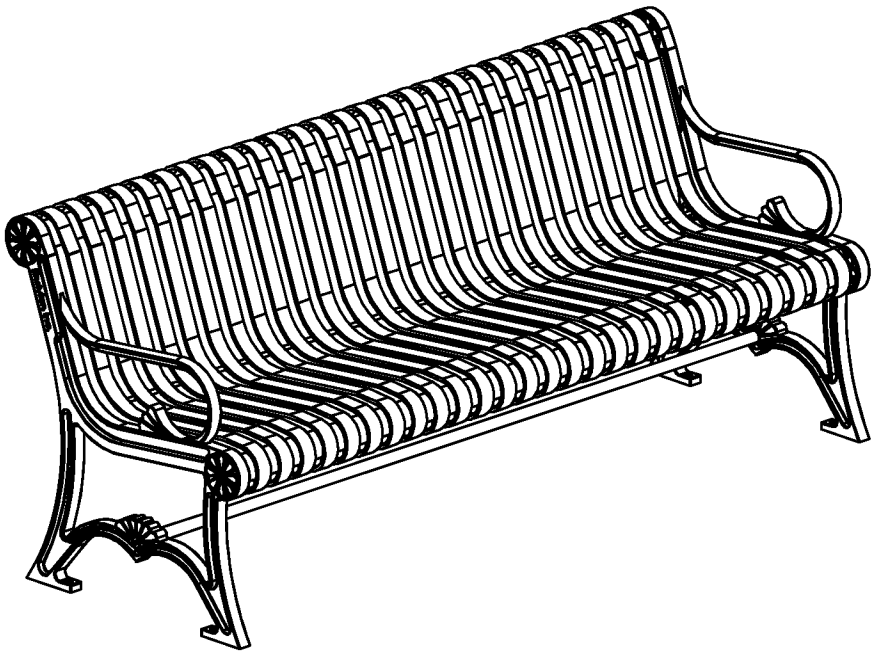

NOTES

1.) ALL STL. MEMBERS COATED W/ ZINC RICH EPOXY THEN FINISHED W/ POLYESTER POWDER COATING.
2.) 1/2" X 3 3/4" EXPANSION ANCHOR BOLTS PROVIDED.
3.) CUSTOM LETTERING AVAILABLE FOR RECESSED SIDE PANELS (TOTAL OF 37 SPACES)

☐ CUSTOM LETTERING (37 SPACES) _____

LENGTH OPTIONS

☐ 6' BENCH
☐ 8' BENCH

DuMor, inc.	BENCH	DATE DRAWN : 3/22/94 DRAWN BY : AH DATE REV. : 11/21/99 REV. BY : JSB	REV. D	DRAWING NUMBER 58 SERIES	SHEET 1 OF 2

NOTES:

1.) DURING ASSEMBLY PROCEDURE; DO NOT COMPLETELY TIGHTEN HARDWARE.
2.) THE ACTUAL PARTS WILL NOT BE NUMBERED. NUMBERS ONLY APPLY TO DRAWING.
3.) UPON COMPLETION OF ASSEMBLY SQUARE ALL COMPONENTS THEN TIGHTEN ALL HARDWARE.
4.) MOUNT AND ANCHOR AS SPECIFIED.

TOOLS REQ'D

3/4" WRENCH
5/16" ALLEN WRENCH
1/2" MASONRY DRILL BIT
DRILL
RATCHET STRAP (PROVIDED)

PARTS LIST

ITEM	QTY	PART NO	DESCRIPTION
1	2	0-57-00-02	CAST IRON BENCH SUPPORT W/BACK
2	1	0-57-60-04	71 3/4" PIPE BRACE
3	1	0-58-60-01	6' STL SEAT
4	6	1-12-065	1/2" X 2 1/2" FLT SKT HD CAP SCR

KITS PROVIDED

ITEM	QTY	PART NO	DESCRIPTION
5	1	K-FC0840-6	1/2" CAP HARDWARE KIT (6PC)
6	1	K-ANC0860-4	1/2" X 3 3/4" SS ANCHOR KIT (4PC)

1

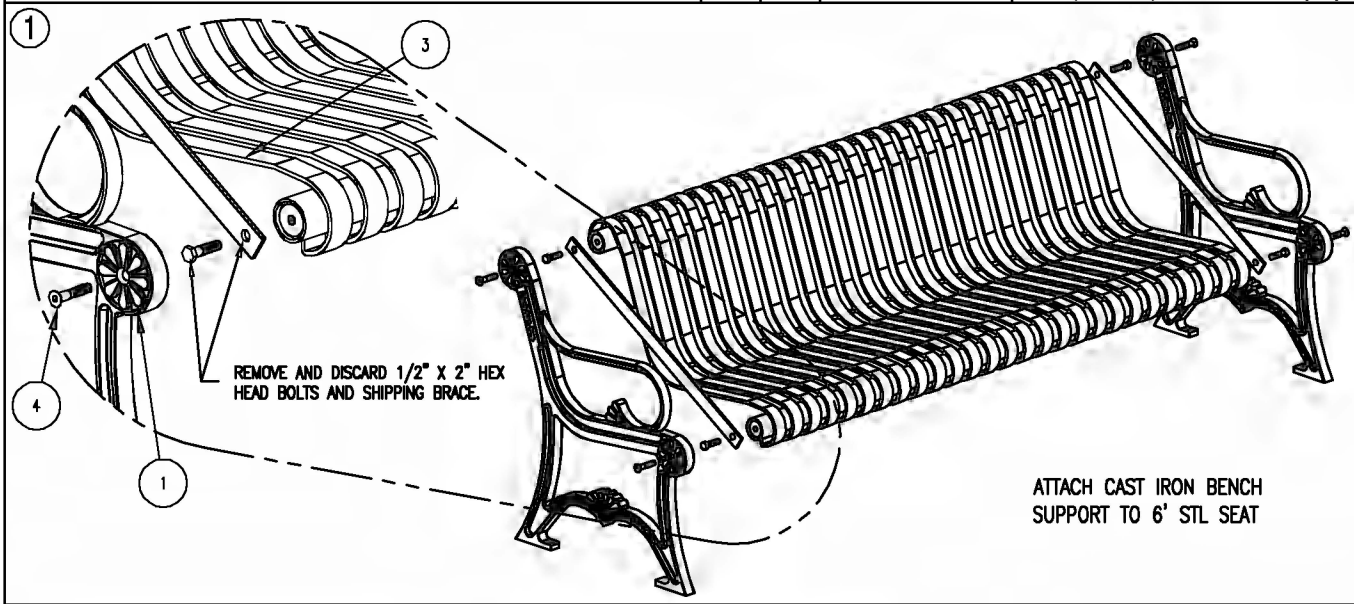

1A

PLACE SEAT ASSEMBLY ON WORK SURFACE ALLOWING ACCESS TO ENDS. PLACE RATCHET STRAP AROUND SEAT ASSEMBLY AS SHOWN ABOVE.

1B

TIGHTEN STRAP UNTIL SHIPPING BRACKET BECOMES LOOSE. THEN REMOVE AND DISCARD BOLTS & SHIPPING BRACKET.

1C

ATTACH CAST SUPPORT TO SEAT ASSEMBLY. IF HOLES IN CASTING DO NOT ALIGN WITH THE SEAT ASSEMBLY, ADJUST BY USING THE RATCHET STRAP.

1D

TIGHTEN HARDWARE THEN REMOVE RATCHET STRAP AND REPEAT THIS PROCEDURE ON THE OTHER END OF BENCH.

2

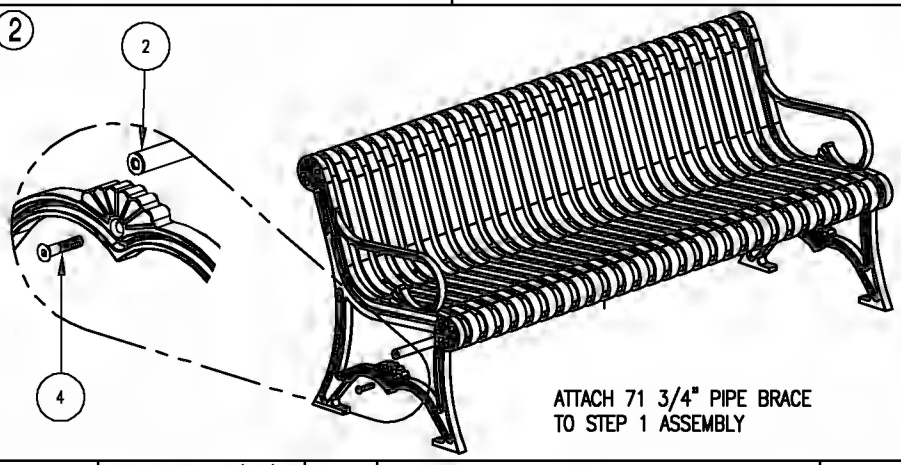

DuMor, inc.	ASSEMBLY INSTRUCTIONS	DATE DRAWN : 3/22/94 DRAWN BY : AH DATE REV. : 11/21/99 REV. BY : JSB	REV. D	DRAWING NUMBER 58 SERIES	SHEET 2 OF 2

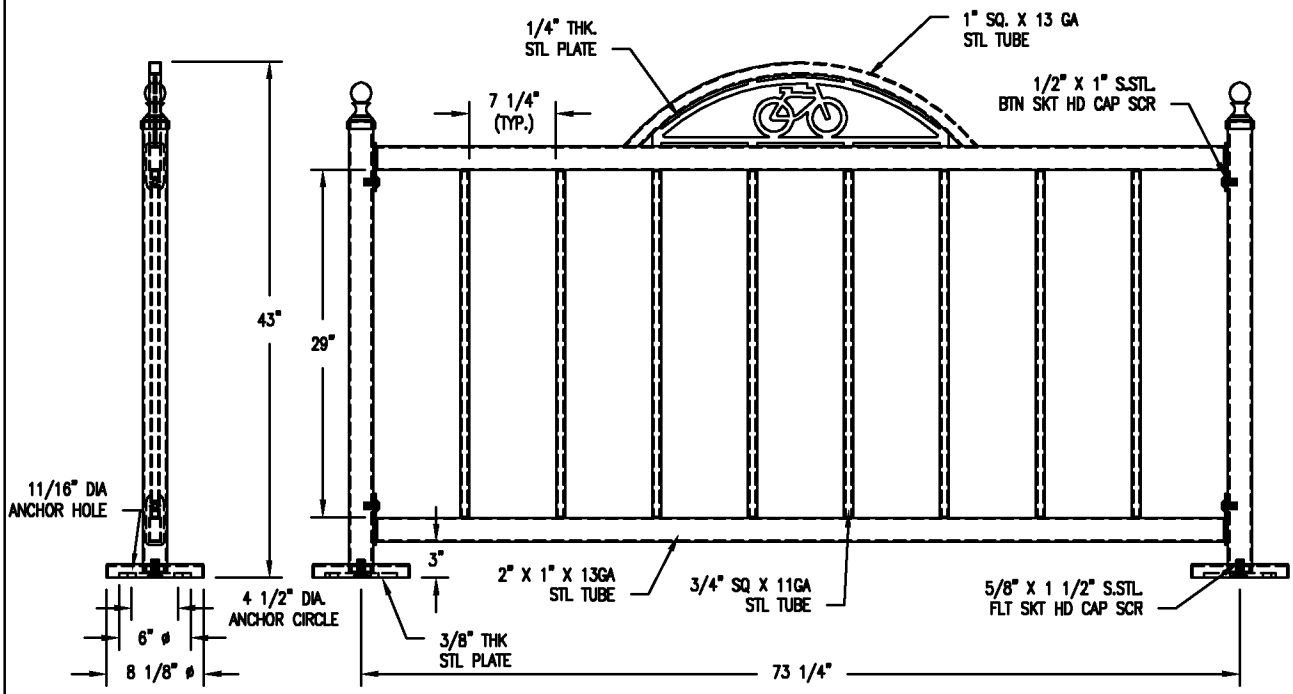

* ☐ S-2 SURFACE MOUNT *
(SEE NOTES)

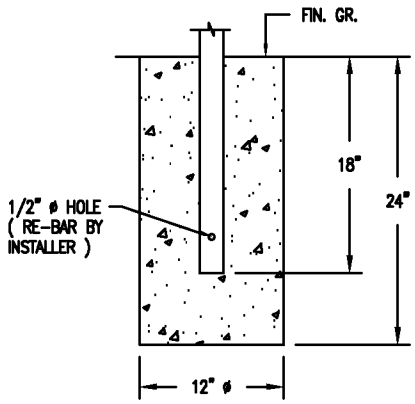

☐ S-1 EMBEDMENT

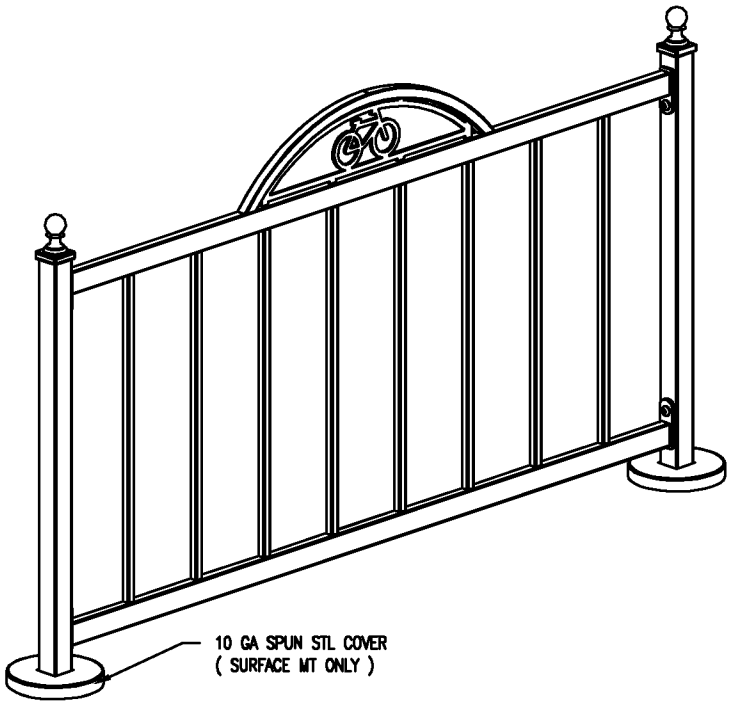

NOTES:

1.) ALL STL. MEMBERS COATED W/ ZINC RICH EPOXY THEN FINISHED W/ POLYESTER POWDER COATING.

2.) 1/2" X 3 3/4" EXPANSION ANCHOR BOLTS PROVIDED FOR OPTION S-2.

* UPCHARGE APPLIES TO SUPPORT OPTION – CONSULT YOUR LOCAL REPRESENTATIVE.

DuMor, inc.	BIKE RACK	DATE DRAWN : 10/14/09 DRAWN BY : AWH DATE REV. : 00/00/00 REV. BY : XXX	REV. A	DRAWING NUMBER 188-09	SHEET 1 OF 2

NOTES:

1.) DURING ASSEMBLY PROCEDURE; DO NOT COMPLETELY TIGHTEN HARDWARE.
2.) THE ACTUAL PARTS WILL NOT BE NUMBERED. NUMBERS ONLY APPLY TO DRAWING.
3.) UPON COMPLETION OF ASSEMBLY SQUARE ALL COMPONENTS THEN TIGHTEN ALL HARDWARE.
4.) MOUNT AND ANCHOR AS SPECIFIED.

TOOLS REQ'D

3/4" WRENCH
5/16" ALLEN WRENCH
3/8" ALLEN WRENCH
1/2" MASONRY DRILL BIT
DRILL

PARTS LIST FOR S-2

ITEM	QTY	PART NO	DESCRIPTION
1	2	0-188-00-02/S-2	2" SQ SUPPORT POST FOR SURFACE MOUNT
2	2	0-188-00-04	10 GA X 8" DIA STL ANCHOR PLATE COVER
3	1	0-188-09-01	STL BIKE RACK, 9 OPENINGS
4	2	0-83-00-03	3/8" THK SURFACE MOUNT PLATE
5	4	1-12-056	1/2" X 1" SS BTN SKT HD CAP SCR
6	2	1-12-102	5/8" X 1 1/2" SS FLT SKT HD CAP SCR

KITS PROVIDED FOR S-2

ITEM	QTY	PART NO	DESCRIPTION
7	2	K-ANC0860-3	1/2" X 3 3/4" SS ANCHOR KIT (3PCS)
8	1	K-BC0816-4	1/2" CAP HARDWARE KIT (4PC)
9	1	K-FC1024-2	5/8" CAP HARDWARE KIT (2PC)

1

SLIDE COVER ONTO SUPPORT POST THEN ATTACH SURFACE MOUNT PLATE TO SUPPORT POST.

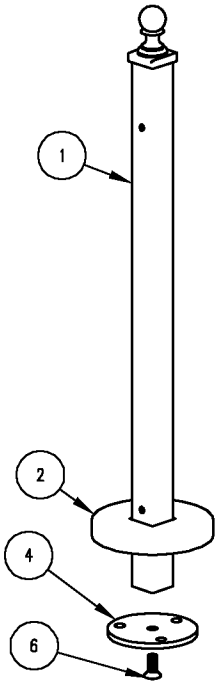

2

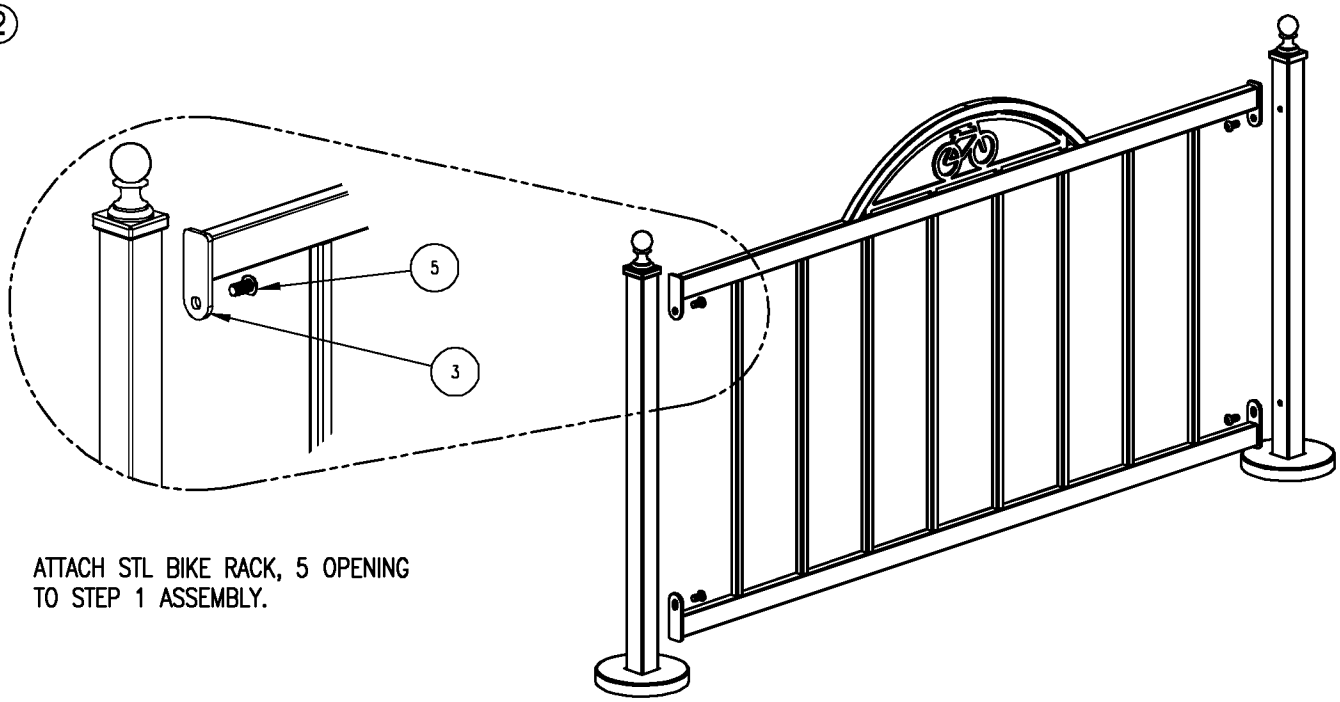

ATTACH STL BIKE RACK, 5 OPENING TO STEP 1 ASSEMBLY.

DuMor, inc.	ASSEMBLY INSTRUCTIONS	DATE DRAWN : 10/14/09 DRAWN BY : AWH DATE REV. : 00/00/00 REV. BY : XXX	REV. A	DRAWING NUMBER 188-09	SHEET 2 OF 2

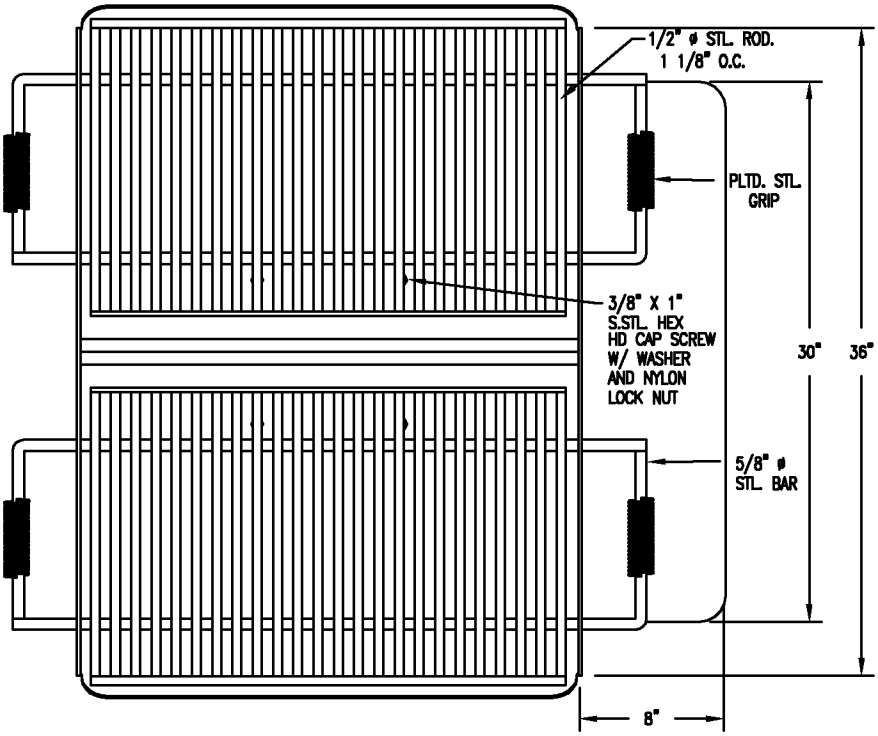

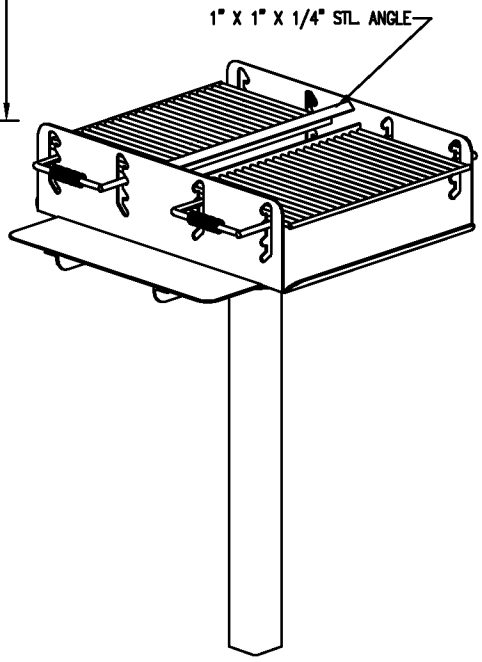

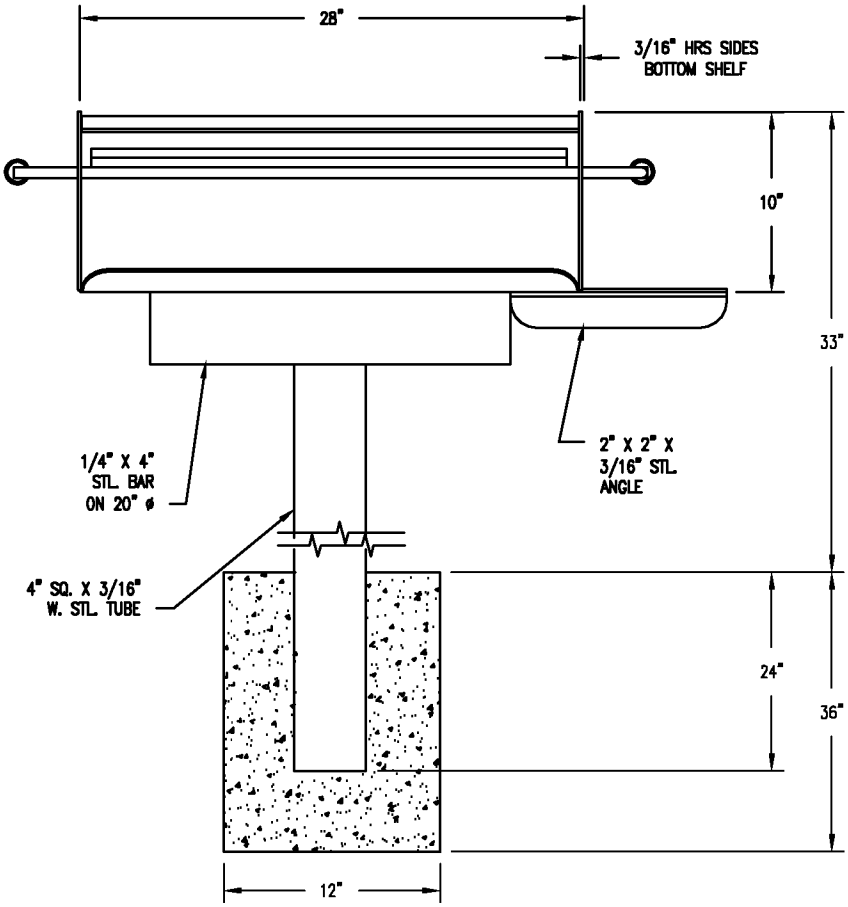

NOTES

1.) GRILL FINISHED W/ HEAT RESISTANT BLACK ENAMEL.

DuMor, inc.	DUAL LEVEL GRILL	DATE DRAWN : 03/22/94 DRAWN BY : CDC DATE REV. : 02/14/03 REV. BY : CDC	REV. B	DRAWING NUMBER 24-00	SHEET 1 OF 2

NOTES:

1.) DURING ASSEMBLY PROCEDURE; DO NOT COMPLETELY TIGHTEN HARDWARE.
2.) THE ACTUAL PARTS WILL NOT BE NUMBERED. NUMBERS ONLY APPLY TO DRAWING.
3.) UPON COMPLETION OF ASSEMBLY SQUARE ALL COMPONENTS THEN TIGHTEN ALL HARDWARE.
4.) MOUNT AND ANCHOR AS SPECIFIED.

TOOLS REQ'D

9/16" WRENCH

PARTS LIST

ITEM	QTY	PART NO	DESCRIPTION
1	1	0-24-00-01	DUAL-LEVEL GRILL BODY
2	1	0-24-00-02	SUPPORT POST FOR EMBEDMENT
3	4	1-12-018	3/8" X 1" SS HEX HD CAP SCR
4	4	1-20-007	3/8" SS NYLON LOCKNUT
5	4	1-22-024	3/8" SS FLAT WASHER

KITS PROVIDED

ITEM	QTY	PART NO	DESCRIPTION
6	1	K-HC0616-4	3/8" HARDWARE KIT (4PC)

(1) ATTACH GRILL BODY TO SUPPORT POST.

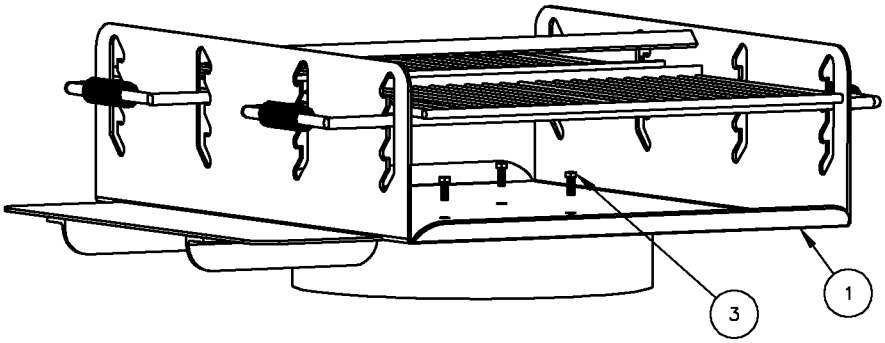

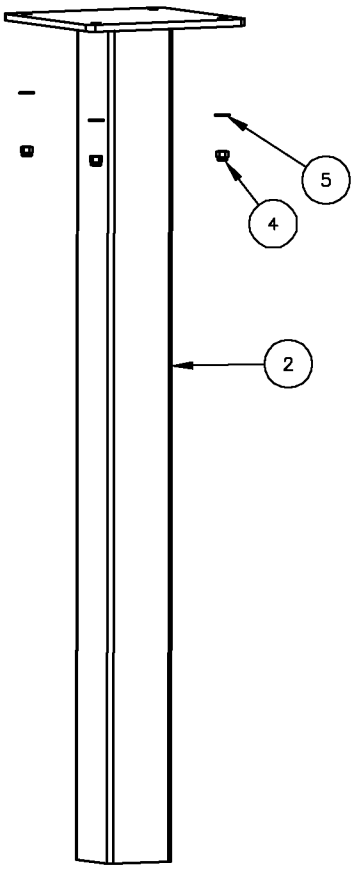

DuMor, inc.	ASSEMBLY INSTRUCTIONS	DATE DRAWN : 03/22/94 DRAWN BY : CDC DATE REV. : 02/14/03 REV. BY : CDC	REV. B	DRAWING NUMBER 24-00	SHEET 2 OF 2

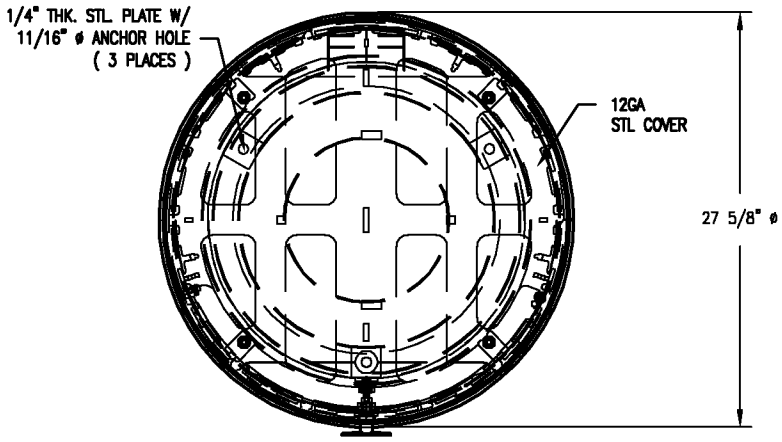

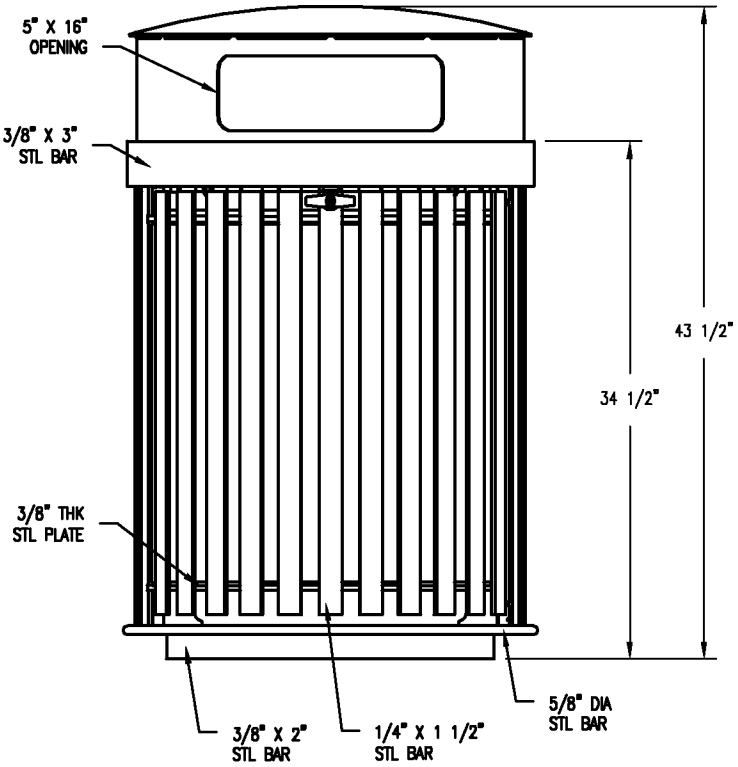

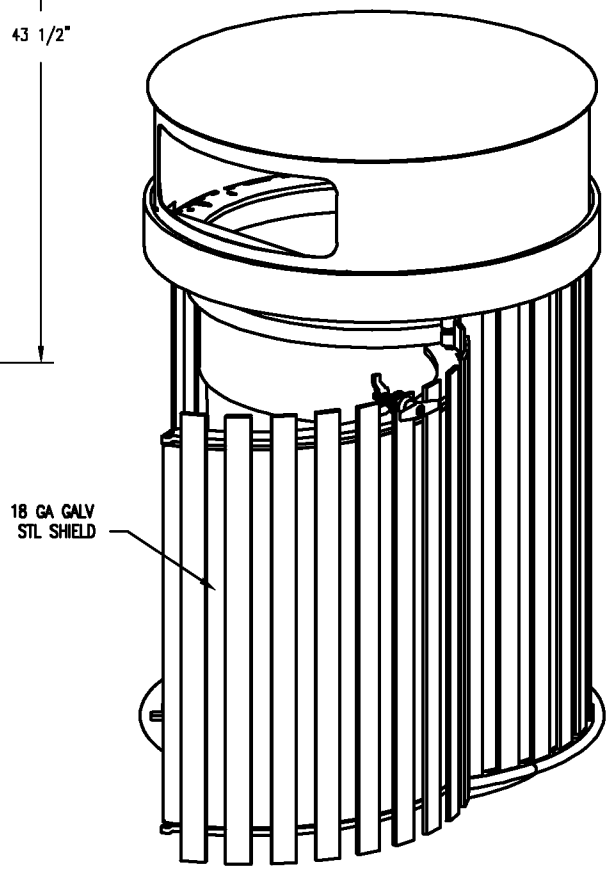

NOTES

1.) ALL STL. MEMBERS COATED W/ ZINC RICH EPOXY THEN FINISHED W/ POLYESTER POWDER COATING.
2.) 1/2" X 3 3/4" EXPANSION ANCHOR BOLTS PROVIDED (QTY 3).
3.) RECYCLING UNIT HINGE FOR REMOVAL OF 32 GAL LINER.

DuMor, inc.	RECPTACLE	DATE DRAWN : 11/11/16 DRAWN BY : JSB DATE REV. : REV. BY :	REV. A	DRAWING NUMBER 287-32SH-SO	SHEET 1 OF 2

NOTES:

1.) THE ACTUAL PARTS WILL NOT BE NUMBERED. NUMBERS ONLY APPLY TO DRAWING.
2.) MOUNT AND ANCHOR AS SPECIFIED.

TOOLS REQ'D

3/4" WRENCH
1/2" MASONRY DRILL BIT
DRILL

PARTS LIST

ITEM	QTY	PART NO	DESCRIPTION
1	1	0-287-30SH-SO	30 GAL RECEPTACLE ASSEMBLY W/ SIDE OPENING
2	1	49-32	32 GAL PL LINER W/ HANDLE, BLK

KITS PROVIDED

ITEM	QTY	PART NO	DESCRIPTION
3	1	K-ANC0860-3	1/2" X 3 3/4" SS ANCHOR KIT (3PCS)

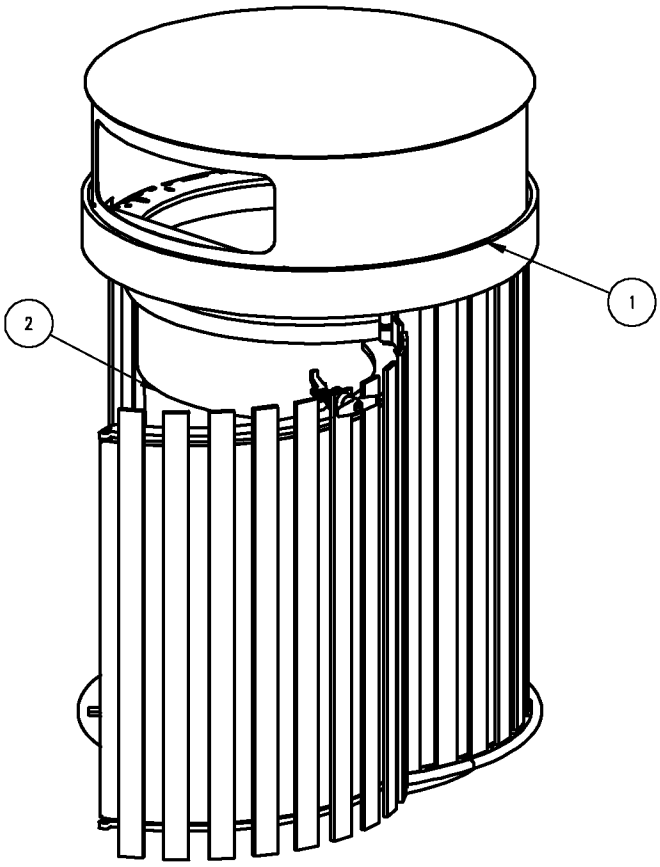

DuMor, inc.	ASSEMBLY INSTRUCTIONS	DATE DRAWN :11/11/16 DRAWN BY : JSB DATE REV. : REV. BY :	REV. A	DRAWING NUMBER 287-32SH-SO	SHEET 2 OF 2

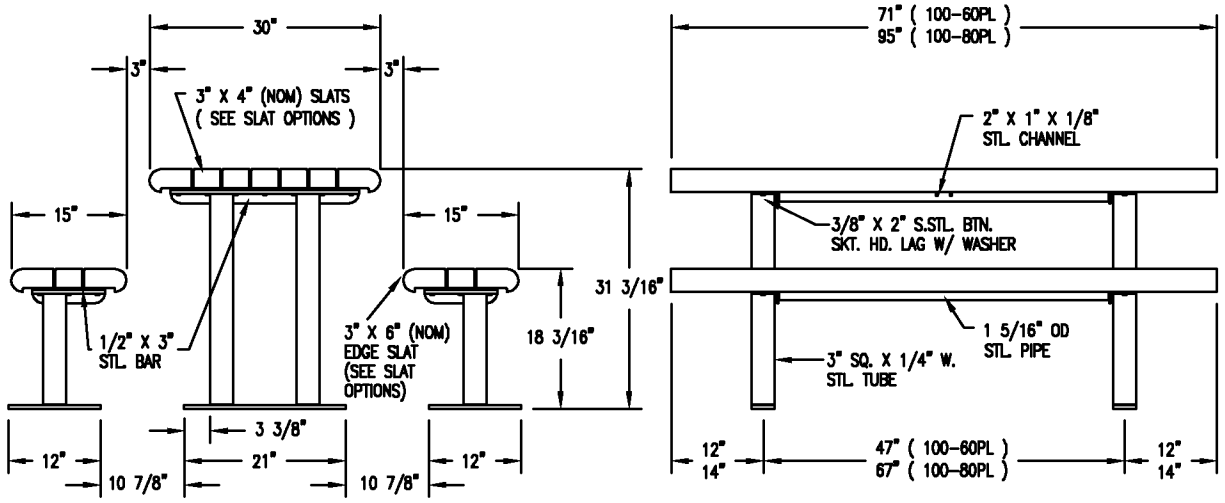

☐ S-2 SURFACE MOUNT

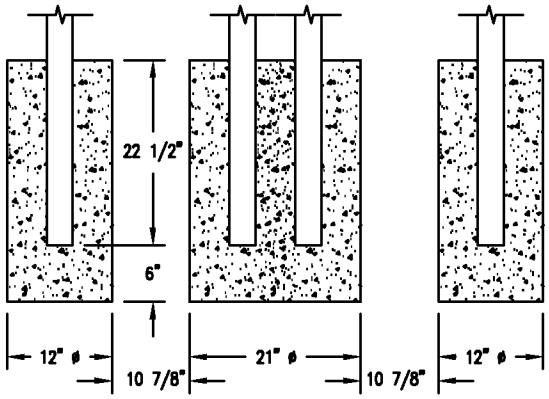

☐ S-1 EMBEDMENT

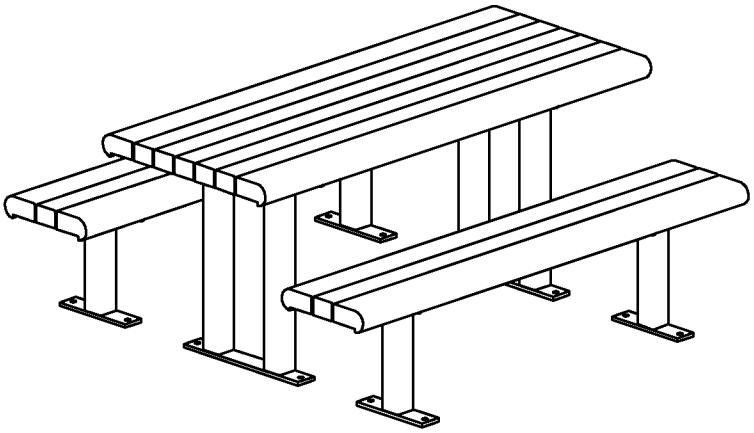

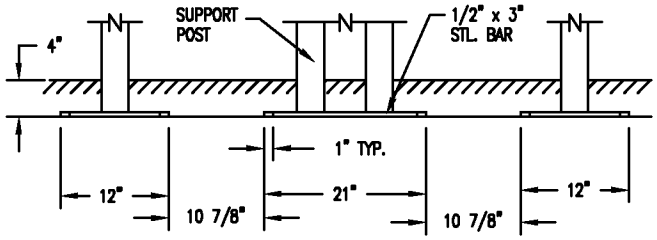

☐ S-4 SUB FLOOR

LENGTH OPTIONS

☐ 6' TABLE
☐ 8' TABLE

SLAT OPTIONS

☐ "CEDAR" RECYCLED PLASTIC
☐ "GREY" RECYCLED PLASTIC
☐ "REDWOOD" RECYCLED PLASTIC
☐ "WALNUT" RECYCLED PLASTIC
☐ OTHER _____

NOTES:

1.) ALL STL. MEMBERS COATED W/ ZINC RICH EPOXY THEN FINISHED W/ POLYESTER POWDER COATING.
2.) 1/2" X 3 3/4" EXPANSION ANCHOR BOLTS PROVIDED. FOR OPTIONS S-2 & S-4.

DuMor, inc.	TABLE	DATE DRAWN : 10/10/95 DRAWN BY : AH DATE REV. : 01/14/14 REV. BY : ESS	REV. F	DRAWING NUMBER 100 SERIES PL	SHEET 1 OF 2

NOTE:

1.) DURING ASSEMBLY PROCEDURE; DO NOT COMPLETELY TIGHTEN HARDWARE.
2.) THE ACTUAL PARTS WILL NOT BE NUMBERED. NUMBERS ONLY APPLY TO DRAWING.
3.) UPON COMPLETION OF ASSEMBLY SQUARE ALL COMPONENTS THEN TIGHTEN ALL HARDWARE.
4.) MOUNT AND ANCHOR AS SPECIFIED.

TOOLS REQ'D

3/4" WRENCH
1/4" ALLEN WRENCH
1/2" MASONRY DRILL BIT
DRILL

PARTS LIST FOR S-2

ITEM	QTY	PART NO	DESCRIPTION
1	2	0-100-00-01/S-2	TABLE TOP SUPPORT FOR SURFACE
2	4	0-100-00-02/S-2	SEAT SUPPORT FOR SURFACE MT
3	1	0-100-60-05	6' TABLE TOP BRACE
4	2	0-100-60-06	6' SEAT BRACE
5	7	0-88-60PL-02	3" X 4" X 71" INT'R SLAT, PLASTIC
6	6	0-88-60PL-03	71" EDGE SLAT, PLASTIC
7	39	1-13-016	3/8" X 2" SS BTN SKT HD LAG SCR
8	39	1-22-024	3/8" SS FLAT WASHER

KITS PROVIDED FOR S-2

ITEM	QTY	PART NO	DESCRIPTION
9	3	K-ANC0860-4	1/2" X 3 3/4" SS ANCHOR KIT (4PC)
10	1	K-BL0632-40	3/8" LAG HARDWARE KIT (40PC)

(1) ATTACH SLATS & BRACES TO SUPPORTS.

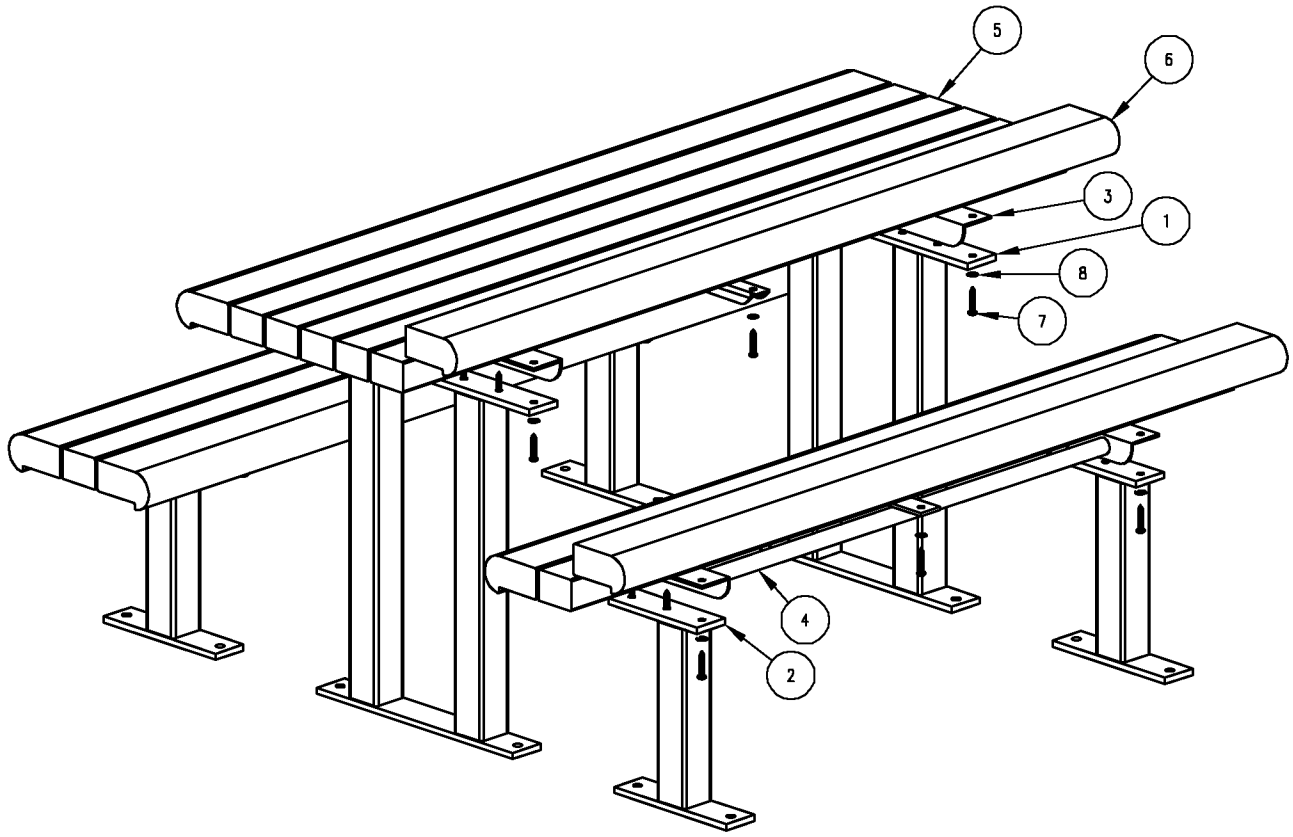

DuMor, inc.	ASSEMBLY INSTRUCTIONS	DATE DRAWN : 10/10/95 DRAWN BY : AWH DATE REV. : 01/14/14 REV. BY : ESS	REV. F	DRAWING NUMBER 100 SERIES PL	SHEET 2 OF 2

ATTACHMENT #3

EVERGREEN
CONSTRUCTION

June 23, 2022

City of Mount Dora
210 North Baker Street
Mount Dora, Florida 32757
Attention: Mr. Chet Cramer

RE: Contingency Request #02
Cauley Lott Park
City of Mount Dora, Florida

Sir,

Evergreen CM is pleased to provide our Contingency Request for General Conditions.

Description of Request, Cost and Time Impact
This change is related to changes to structural steel purlins sizing, beam pounds per square foot and base plate sizing for the Cauley Lott Park project.

This proposal includes cost to provide structural steel changes. Specifically excluded are the cost of building permit, performance and payment bond, and builder's all-risk insurance.

Enclosed is our itemized Contingency Request Cost Summary including subcontractor backup in the amount of $15,577.00.

We request a time extension to our substantial completion date of 0 days.

Sincerely,
Evergreen Construction

Shawn Howard
Project Manager

Approved By:
City of Mount Dora

Patrick C. Comiskey

Patrick C. Comiskey, City Manager

June 28, 2022

Date

Evergreen Construction Management, Inc.
www.evergreencm.net

30941 Suneagle Drive
Mount Dora, Florida 32757
352.227.1460

EVERGREEN CONSTRUCTION

Contingency Request #2
Estimate Cost Summary
Description of work:

Date Submitted: 6/22/2022
Project Name: Cauley Lott Park
Location: Mt Dora FL
Client: City of Mt Dora

Division	Scope	Source of Cost	Quantity	Unit	Unit Cost	Total Cost
05 45 00 S	Changes in Steel	Advance Welding	1	LS	15,577.00	15,577.00
	$31,154.00 / 2 = $15,577.00 (Split by City and AWF)					
	Purlins from 6x4x3/8 tubes to 8x6x1/2 tubes $27,354.00					
	Beams from 60lbs per foot to 68lbs per foot $ 3,000.00					
	Base plate thickness changes $ 800.00					
Subtotal						**$15,577.00**
	General Liability Insurance				1.3%	0.00
	Bond					nic
Subtotal						**$15,577.00**
	Construction Management Fee				5.0%	
Total	**Contingency Amount Requested**					**$15,577.00**

TampaBaySteel

Metals friendly the environment

Q U O T A T I O N

No: TPA WS-829164

Quoted By:
TAMPA BAY STEEL CORP
TAMPA
Tel: 813-621-4738 Fax: 813 621-6775

Quoted To: (4547)
ADVANCED WELDING, FAB. & DESIGN
13540 S.E. 31ST AVE.
SUMMERFIELD, FL 34491

Quoted Ship To: (1)
ADVANCED WELDING, FAB. & DESIGN
13540 S.E. 31ST AVE.
SUMMERFIELD, FL 34491

Trm NET 30 DAYS
Frt CHARGE
Tel 352-203-4515 Fax 352-237-9828
Slp RALPH CRITELLI

Qtd 29Apr22 Qte Ref
Via OUR TRUCK
Ctc NEIL

FOB

Q U O T A T I O N

QT No: TPA WS-829164

NEW DELIVERY HOURS
MONDAY THRU THURSDAY 7:30am TO 4:00pm
FRIDAY 7:30am TO 10:30am

1	RECTANGULAR TUBING		2 PCS	3423 LBS
	10 X 8 X 3/8 X 40'			80 FT
	WS MATERIAL COST	80 FT @	55.0000 FT	4,400.00
	FUEL SURCHARGE	3,423 LBS @	.4300 CWT	14.72
2	RECTANGULAR TUBING		7 PCS	8387 LBS
	10 X 8 X 3/8 X 28'			196 FT
	WS MATERIAL COST	196 FT @	55.0000 FT	10,780.00
	FUEL SURCHARGE	8,387 LBS @	.4300 CWT	36.06
3	RECTANGULAR TUBING 10 X 8 X 5/8 X 48'		2 PCS	6511 LBS
				96 FT
	WS MATERIAL COST	96 FT @	102.0000 FT	9,792.00
	FUEL SURCHARGE	6,511 LBS @	.4300 CWT	28.00
4	RECTANGULAR TUBING 10 X 8 X 5/8 X 30'		1 PCS	2035 LBS
				30 FT
	WS MATERIAL COST	30 FT @	102.0000 FT	3,060.00
	FUEL SURCHARGE	2,035 LBS @	.4300 CWT	8.75
5	RECTANGULAR TUBING		24 PCS	32294 LBS
	8 X 6 X 1/2 X 32'			768 FT
	WS MATERIAL COST	768 FT @	51.7500 FT	39,744.00
	FUEL SURCHARGE	32,294 LBS @	.4300 CWT	138.86
6	RECTANGULAR TUBING		12 PCS	15138 LBS
	8 X 6 X 1/2 X 30'			360 FT
	WS MATERIAL COST	360 FT @	51.7500 FT	18,630.00
	FUEL SURCHARGE	15,138 LBS @	.4300 CWT	65.09
7	RECTANGULAR TUBING		21 PCS	18774 LBS
	6 X 4 X 3/8 X 40'			840 FT

TampaBaySteel

Metals friendly the environment

Q U O T A T I O N

No: TPA WS-829164

Quoted By:
TAMPA BAY STEEL CORP
TAMPA
Tel: 813-621-4738 Fax: 813 621-6775

Quoted To: (4547)
ADVANCED WELDING, FAB. & DESIGN

Quoted Ship To: (1)
ADVANCED WELDING, FAB. & DESIGN

Q U O T A T I O N — QT No: TPA WS-829164

WS MATERIAL COST	840 FT @	27.5000 FT	23,100.00	
FUEL SURCHARGE	18,774 LBS @	.4300 CWT	80.73	
8 RECTANGULAR TUBING		10 PCS	10728	LBS
6 X 4 X 3/8 X 48'			480	FT
WS MATERIAL COST	480 FT @	27.5000 FT	13,200.00	
FUEL SURCHARGE	10,728 LBS @	.4300 CWT	46.13	
9 SQUARE TUBING		1 PCS	1410	LBS
6 X 1/2 X 40'			40	FT
WS MATERIAL COST	40 FT @	43.7500 FT	1,750.00	
FUEL SURCHARGE	1,410 LBS @	.4300 CWT	6.06	
10 WIDE FLANGE BEAM		8 PCS	21941	LBS
21 X 68 A992; A572-50 X 40' 4"				
WS MATERIAL COST	21,941 LBS @	95.0000 CWT	20,843.95	
FUEL SURCHARGE	21,941 LBS @	.4300 CWT	94.35	
11 RECTANGULAR TUBING		2 PCS	2606	LBS
8 X 6 X 3/8 X 40'			80	FT
WS MATERIAL COST	80 FT @	49.0000 FT	3,920.00	
FUEL SURCHARGE	2,606 LBS @	.4300 CWT	11.21	
12 RECTANGULAR TUBING		1 PCS	652	LBS
8 X 6 X 3/8 X 20'			20	FT
WS MATERIAL COST	20 FT @	49.0000 FT	980.00	
FUEL SURCHARGE	652 LBS @	.4300 CWT	2.80	
13 SQUARE TUBING		2 PCS	2198	LBS
6 X 3/8 X 40'			80	FT
WS MATERIAL COST	80 FT @	33.7500 FT	2,700.00	
FUEL SURCHARGE	2,198 LBS @	.4300 CWT	9.45	
14 SQUARE TUBING		1 PCS	550	LBS
6 X 3/8 X 20'			20	FT
WS MATERIAL COST	20 FT @	33.7500 FT	675.00	
FUEL SURCHARGE	550 LBS @	.4300 CWT	2.37	
15 SQUARE TUBING		1 PCS	292	LBS
3 X 3/8 X 24'			24	FT
WS MATERIAL COST	24 FT @	14.9500 FT	358.80	
FUEL SURCHARGE	292 LBS @	.4300 CWT	1.26	
16 SQUARE TUBING		1 PCS	653	LBS
10 X 1/4 X 20'			20	FT

TampaBaySteel

Metals friendly the difference

Q U O T A T I O N

No: TPA WS-829164

Quoted By:
TAMPA BAY STEEL CORP
TAMPA
Tel: 813-621-4738 Fax: 813 621-6775

Quoted To: (4547)
ADVANCED WELDING, FAB. & DESIGN

Quoted Ship To: (1)
ADVANCED WELDING, FAB. & DESIGN

Q U O T A T I O N

QT No: TPA WS-829164

WS MATERIAL COST	20 FT @	40.0000 FT		800.00
FUEL SURCHARGE	653 LBS @	.4300 CWT		2.81
17 WIDE FLANGE BEAM		1 PCS	2000	LBS
12 X 40 A992; A572-50 X 50'				
WS MATERIAL COST	2,000 LBS @	98.0000 CWT		1,960.00
FUEL SURCHARGE	2,000 LBS @	.4300 CWT		8.60
18 WIDE FLANGE BEAM		7 PCS	3640	LBS
10 X 26 A992; A572-50 X 20'				
WS MATERIAL COST	3,640 LBS @	94.0000 CWT		3,421.60
FUEL SURCHARGE	3,640 LBS @	.4300 CWT		15.65
19 WIDE FLANGE BEAM		5 PCS	4000	LBS
12 X 40 A992; A572-50 X 20'				
WS MATERIAL COST	4,000 LBS @	98.0000 CWT		3,920.00
FUEL SURCHARGE	4,000 LBS @	.4300 CWT		17.20
20 RECTANGULAR TUBING		10 PCS	5364	LBS
6 X 4 X 3/8 X 24'			240	FT
WS MATERIAL COST	240 FT @	27.5000 FT		6,600.00
FUEL SURCHARGE	5,364 LBS @	.4300 CWT		23.07

* Unit prices quoted are based on placement of entire order. Any deviation from quantities quoted are subject to re-quote.
* Availability subject to prior sale(s).
* Pricing subject to change until order is placed

PLEASE CHECK CAREFULLY

Order Totals: 20 Items 142596 LBS

Material	Processing	Freight	Other	Taxes	ORDER AMT
170,635.35		613.17		11,944.49	183,193.01
Taxes: 1	10,238.13 81	1,706.36		0.00	0.00

Page: 3 last

ATTACHMENT #4

CITY OF MOUNT DORA/CRA/Northeast CRA
TASK AUTHORIZATION

In accordance with the terms and conditions of the Agreement between Evergreen Construction Management, Inc., (Construction Manager) and the City of Mount Dora/CRA/Northeast CRA, dated April 7, 2020, the parties hereto agree to the scope of work, pricing/GMP, schedule, construction team and subcontractors attached hereto.

City Project Manager:
Chet Cramer

Construction Manager Contact:
Richard Charleson

Project Name:
Summerview Park Pickleball Courts

Project Number:
22-027

NOTE: THE CONTRACTOR MAY NOT BEGIN WORK UNTIL THIS FULLY SIGNED TASK AUTHORIZATION IS DELIVERED TO THE CONSTRUCTION MANAGER.

SUMMARY OF WORK TO BE COMPLETED
Each Task Authorization package shall include: Exhibit A – Scope of Work Exhibit B – Price/GMP Breakdown Exhibit C – Basic Schedule Exhibit D – Construction Team Exhibit E – Construction Manager's Staff Exhibit F – Sub-Contractors
Recommended By: Print: _____ Signature: Chet D. Cramer Digitally signed by Chet D. Cramer DN: C=US, E=ccramer@cityofmountdora.com, O=City of Mount Dora, OU=Construction Project Manager, CN=Chet D. Cramer Date: 2022.06.28 09:31:37-04'00' Date: _____
Reviewed By (if applicable): Print: _____ Signature: _____ Date: _____

CONTRACTOR ACCEPTANCE		CITY APPROVAL	
Print Name:	Richard Charleson	**Print Name:**	Patrick Comiskey
Title:	Director Pre-Construction	**Title:**	City Manager
Signature:	Richard Charleson	**Signature:**	Patrick C
Date:	June 21, 2022	**Date:**	June 21, 2022

EVERGREEN
CONSTRUCTION

June 16, 2022

Mr. Chet Cramer
City of Mount Dora
510 North Baker Street
Mount Dora, Florida 32757

RE: **Continuing Services Contract – Summerview Park Pickleball Courts**
Mount Dora, Florida

Dear Chet,

Per your request, we have confirmed that our selected civil design firm will honor their previous proposal for the design of the six-(6) pickleball courts at Summerview Park.

A copy of the civil engineer's previous proposal is attached. Please note Germana Engineering has assumed we will prepare a submittal package only to St. Johns River Management District for an exemption. No additional engineering is included.

Depending on the configuration of the courts, the existing five feet (5') of fall across the site from east to west could be handled with tie-in slopes or a short retaining wall. Sloping the site is the least expensive option; however, if a retaining wall is required, the design for that would be an added cost of approximately $1,500.

We have updated our rough order-of-magnitude estimate of the construction costs to account for three-(3) months escalation. It assumes the design of the site lighting and landscaping will be performed by those respective trades (design/build).

If you should have any questions regarding this pricing, please do not hesitate to contact the undersigned.

Sincerely,

Richard Charleson
Pre-Construction Director

cc: Mark Starcher – Evergreen
Chris Sadowski - Evergreen

30941 Suneagle Drive, Mt. Dora, Florida 32757

Exhibit A – Scope of Work

Evergreen will provide preconstruction services for the addition of six-(6) pickleball courts at Summerview Park to include design and estimating services.

Exhibit B - Pre-Construction Services GMP:

Civil design by Germana Engineering		$2,650.00
Evergreen Pre-construction	24 hours @ $90	2,160.00
Topographical Survey	16 hours @ $80	1,280.00
Printing Costs		210.00
Contractor's Fee		500.00
	Total	$7,100.00

Excludes any permitting costs and electrical, landscape and structural design costs.

Budget of Construction Costs:

- Previous Estimate (March 2, 2022) $ 335,000
- Escalation @ 8% 27,000
- Revised Budget Total $ 362,000

Note: If drinking fountain(s) is desired out at the pickleball courts, figure on an additional $5,000 to run an underground line and install fountain(s).

Exhibit C – Basic Schedule

The time estimated to prepare 100% For Construction documents is eight-(8) weeks.

Exhibit D – Design and Construction Team

Owner's Representative: Chet Cramer (City of Mount Dora)
Designer of Record: Chris Germana (Germana Engineering)
Construction Manager: Richard Charleson (Evergreen Construction)

GERMANA ENGINEERING AND ASSOCIATES, LLC

1120 W. Minneola Avenue
Clermont, Florida 34711
Certificate of Authorization # 29279

August 16, 2021

Evergreen Construction
Mr. Richard Charleson
30941 Suneagle Drive
Mount Dora, Florida 34757

Re: Summer View Park, Pickle Ball Court – City of Mount Dora, Florida
Proposal for Civil Engineering Services

Dear Mr. Richard Charleson:

Germana Engineering and Associates, LLC (the Consultant) is pleased to submit this letter of agreement to Evergreen Construction (the Client) to provide site Civil Engineering support on proposed park improvements. Our Project description, proposed scope of services, and fees are discussed below.

PROJECT DESCRIPTION

We understand the Client would like the Consultant to assist with preparing Civil Engineering Plans for improvements at an existing park located on a developed property within the City of Mount Dora, Florida. The project is referred to as the (the "Site", "Property" "Park", or "Court") throughout this document.

A. The subject site is located on the following parcel which is shown in Exhibit A and B:

    1) ALT Key # 1124298 = 19.95 Acres

B. We understand that the project will consist of a proposed Pickle Ball Court within the existing Summer View Park. The location of the proposed court is identified in the Client provided sketch as shown in Exhibit C.

C. The Pickle Ball Court will be designed in accordance with industry standards. The initial court layout will be coordinated with the Client and City during the concept plan portion of the project (Task 1). Once the initial concept plan layout is accepted by the Client and/or City, the Consultant will then proceed to the Site Engineering Plans (Task 2).

D. It was observed that an existing stormwater pond is located on the park property, west of the proposed Pickle Ball Court location. It is assumed that the existing stormwater pond has capacity to accommodate the additional impervious area associated with the proposed pickle ball court. Therefore stormwater pond design/permitting is not anticipated for the project. If required this can be provided as additional services under a separate scope and fee.

E. A letter modification and/or exemption determination will be submitted to St. Johns River Water Management District demonstrating compliance with the existing on-site stormwater management system.

F. Utility improvements are not anticipated for the project, with the exception of a single water service for hose bibs or drinking fountain. Utility services (if proposed) will connect to existing on-site utility infrastructure. An as-built and/or utility locate will be needed by the Consultant to prepare the Civil Engineering utility design and coordination with existing utilities.

G. It is understood that the following services will be provided under a separate agreement with the Client:

a) Boundary and Topographic Survey

b) Geotechnical Investigation

c) Environmental Investigation

d) Underground utility locate of the project area

e) Landscape and Irrigation Design and Permitting. This includes hardscape design for the court.

f) Traffic Study/Impact Analysis (if required)

g) Building Design and Permitting (if required)

h) Structural Engineering Design and Permitting

SCOPE OF SERVICES

Task 1 – Concept Plan and Client/City Coordination

1. The Consultant will prepare concept plan options of the court and present to the Client for coordination with the City of Mount Dora. Based on Client and City comments the Consultant will revise the concept plan. Requested meeting are included in this task.

Task 2 – Site Engineering Plans

Based on the items described in the Project Description, Germana Engineering and Associates, LLC will prepare site engineering plans that will consist of the following:

A. Title Sheet with Project Notes

B. Demolition Plan

C. Site and Geometry Plan

D. Grading and Drainage Plan Sheets

E. Utility Plan

F. Construction Details

G. Sediment and Erosion Control Plan

The Site Engineering Plans will incorporate details and specifications needed for construction, but will only be limited to site related items. It is assumed that detail and specifications for the building, geotechnical, environment, etc. will be provided by others. Local meetings associated with this task are included in the Consultants scope of services. Requested meetings are included in this task.

Task 3– Agency Permitting Submittals

Germana Engineering and Associates, LLC will prepare Civil Engineering submittal packages for the Regulatory Agencies listed below:

1. **City of Mount Dora**
   a) Germana Engineering and Associates, LLC will prepare a submittal package to the City of Mount Dora for review.
   b) Germana Engineering and Associates, LLC will respond to requests for additional information from the City of Mount Dora regarding the site engineering plan submittal.
2. **St. Johns River Water Management District (SJRWMD)**
   a) Germana Engineering and Associates, LLC will prepare a submittal package to SJRWMD for a Letter Modification or Exemption Determination.
   b) Germana Engineering and Associates, LLC will respond to requests for additional information regarding the site engineering plan submittal.

Task 4– Construction Administration (if requested)

1. The Consultant will conduct Client/City requested site visits throughout the duration of the project construction to observe the Civil related construction items.
2. Under this task the Consultant will also review Civil Related Shop Drawings and Request for Additional Information (RFI's) submitted by the Contractor.
3. The Consultant will prepare final certifications and close out of the project for site related items.

ADDITIONAL SERVICES

Any services not specifically provided for in the above scope will be considered additional services and can be performed at our current hourly rates. Additional services we can provide include, but are not limited to, the following:

1. Improvements not described in the scope of services
2. Permitting not identified in the scope of services
3. Stormwater Pond design and permitting
4. Off-site water and sanitary sewer design/permitting
5. Sanitary lift station design/permitting
6. Roadway or parking improvements located on-site or off-site

INFORMATION PROVIDED BY CLIENT AND/OR OWNER

Germana Engineering and Associates, LLC will utilize the following information which will be provided by the Client or Representative:

1. Agency permitting fees and Signature on permit applications
2. Existing Condition Survey including boundary, and topographic survey (in AutoCadd)
3. Geotechnical Evaluation/Report
4. Environmental Report (Phase 1 and Ecological Assessment)
5. Underground utility locates and as-builts of the park

SERVICES NOT INCLUDED

1. Boundary and Topographic Survey, Preliminary and/or Final Plat
2. Environmental (Phase 1 and Ecological Assessment)
3. Geotechnical Engineering
4. Landscape/Irrigation Design and Permitting
5. Structural Engineering, Retaining Wall/Entrance wall design
6. Traffic Engineering/Traffic studies
7. Design/Permitting of hardscape features associated with the Pickle Ball Court
8. Site Lighting Design and Permitting
9. Underground utility locates

FEE AND BILLING

Germana Engineering and Associates, LLC will provide the services described above for the labor fees below:

TASK	*FEE*
1 – Concept Plan and Client/City Coordination	$ 300
2 – Site Engineering Plans	$ 1,975
3 – Agency Permitting Submittals	$ 375
4 – Construction Administration (if requested)	$ 1,050

Germana Engineering and Associates, LLC will perform the services as described in Task 1 through Task 4 of the Scope of Services for a lump sum labor fee range of **$3,700.**

Direct reimbursable expenses such as rush express delivery services and reprographic printing are included in the Consultants scope. Other direct expenses will be billed at 1.10 times cost. Permitting, application, and other project fees will be paid directly by the Client and/or City.

If Additional Services are needed and requested by the Client, Germana Engineering and Associates, LLC will provide the services on a labor fee plus expense basis according to our current hourly rate schedule.

Fees and expenses will be invoiced based upon the percentage of services performed or actual services performed and expenses incurred, as of the invoice date. Payment will be due within 30 days of receipt of the invoice.

CLOSURE

If you concur with the above and wish to direct Germana Engineering and Associates, LLC to proceed with the services, please have authorized persons execute this Agreement in the spaces provided below and return a signed hard copy or electronic copy to us.

We appreciate the opportunity to provide these services and look forward to working with you. Please contact us if you have any questions.

Regards,

GERMANA ENGINEERING AND ASSOCIATES, LLC.

Christopher M. Germana, P.E.
Manager

Attachments:
Standard Provisions
Exhibit A, B, & C

Agreed to this _____ day of _____, 2021
Evergreen Construction

By: _____

_____
(Print Name)

Title: _____

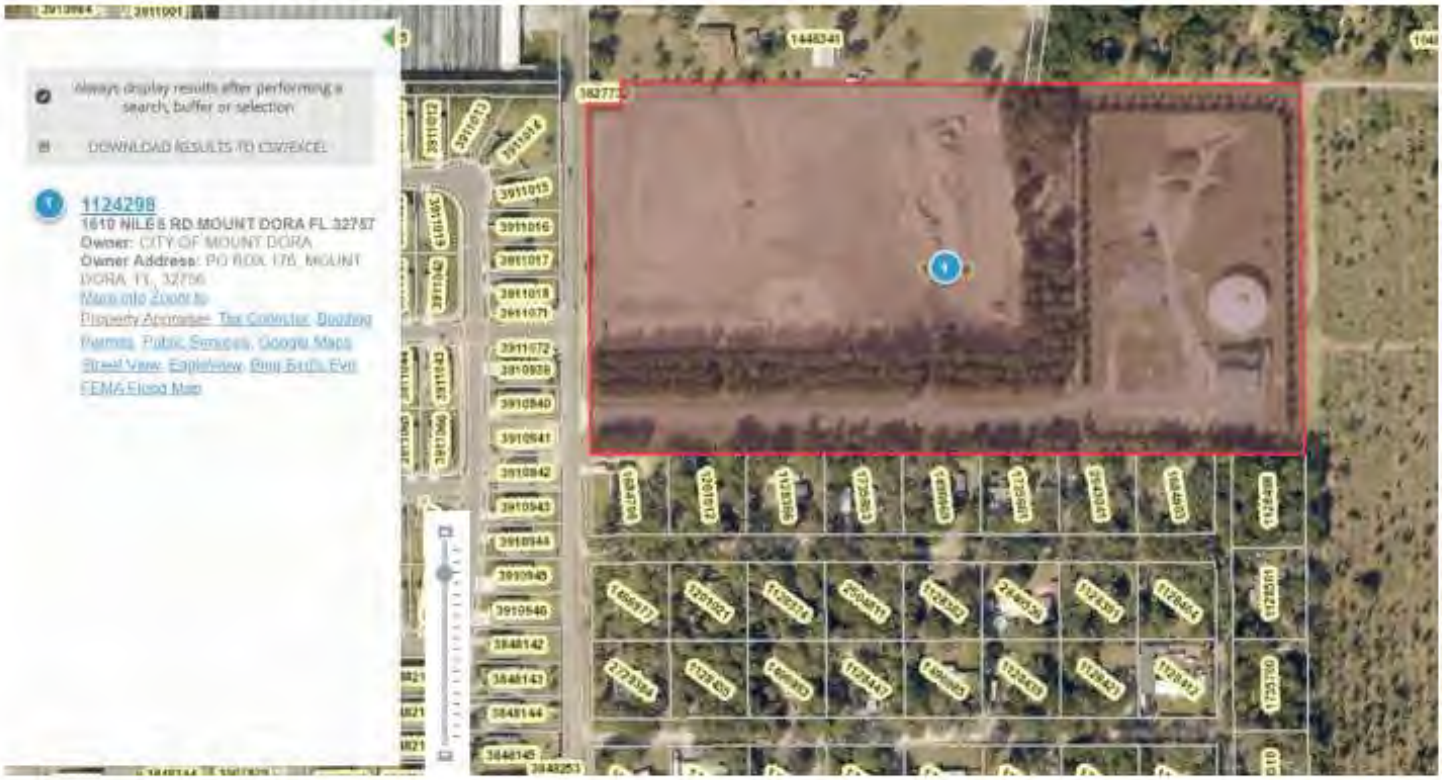

EXHIBIT A
Source: Lake County GIS

EXHIBIT B
Source: Google Maps

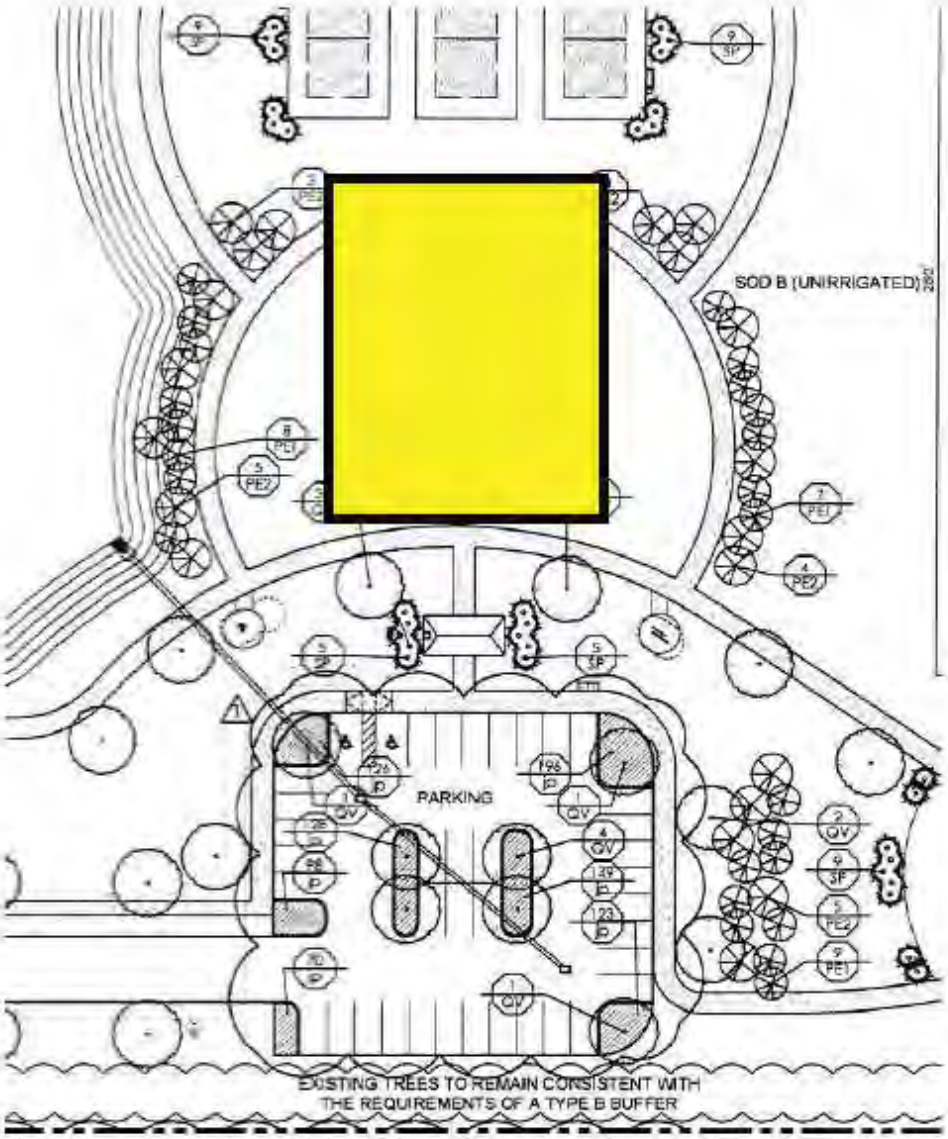

EXHIBIT C
Source: Site Plan provided by Client

GERMANA ENGINEERING AND ASSOCIATES, LLC.
STANDARD PROVISIONS
Date: 06/01/14

(1) **Consultant's Scope of Services.** The Consultant professional services extend only to the services described in this Agreement.

(2) **Consultant's Additional Services.** If requested by the Client and agreed to by the Consultant, the Consultant will perform additional services, which will be governed by these standard provisions. Unless otherwise agreed to in writing, the Client shall pay the Consultant for the performance of Additional Services based upon the Consultant's current hourly rates.

(3) **Use of Prepared Documents.** All documents prepared by the Consultant are related to the services described in this Agreement, and may only be used if the Client has satisfied all obligations under this Agreement. The documents are not intended to be suitable for use or partial use by the Client or others on extensions of this project or on any other project. Any modifications made by the Client to the Consultant's documents, or any use or partial use of the documents without written authorization by the Consultant will be at the Client's sole risk and without liability to the Consultant, and the Client shall indemnify, defend and hold the Consultant harmless from all claims, damages, losses and expenses, including but not limited to attorneys' fees, resulting there from. Any authorization will entitle the Consultant to further compensation at rates to be agreed upon by the Client and the Consultant.

(4) **Insurance.** The Consultant carries general liability insurance. If the Client directs the Consultant to obtain increased insurance coverage, the Consultant will take out additional insurance, if obtainable, at the Client's expense.

(5) **Limitation of liability. T**he Client agrees**,** to the fullest extent of the law, and notwithstanding any other provisions of this Agreement or the existence of applicable insurance coverage, that the total liability, in the aggregate, of the Consultant to the Client or to anyone claiming by, through or under the Client, for any and all claims, losses, costs or damages whatsoever arising out of, resulting from or in any way related to the services under this Agreement from any cause or causes, including but not limited to, the negligence, professional errors or omissions, strict liability or breach of contract or any warranty, express or implied, of the Consultant or the Consultant's officers, directors, employees, agents, and sub-consultants, shall not exceed twice the total compensation received by the Consultant under this Agreement of $5,000 or the amount of the coverage amount shown in the Consultants policy whichever is greater. Under no circumstances shall the Consultant be liable for lost profits or consequential damages, for extra costs or other consequences due to changed conditions or for costs related to the failure of contractors to perform work in accordance with the plans and specifications.

The Client and Consultant agree that neither will be liable to the other for consequential damages incurred due to the fault of the other. Said damages include, but are not limited to, loss of use and lost profits.

All claims, whether based upon contract, tort, breach of warranty, professional negligence (including errors, omissions or other professional acts), or otherwise, shall be deemed waived unless made by the Client in writing and received by the Consultant within one (1) year after Client reasonably knew or should have known of its existence, but in no event, shall such claim be asserted by Client later than two (2) years after the Consultant's completion of services with respect to which the claim is made.

(6) **Dispute Resolution.** All claims by the Client arising out of this Agreement shall be submitted first to mediation in accordance with the Construction Industry Mediation Rules of the American Arbitration Association as a condition precedent to litigation. Any mediation or civil action by Client must be commenced within one year of the accrual of the cause of action asserted but in no event later than allowed by applicable statutes.

(7) **Payment.** Invoices will be submitted periodically by regular mail or email for services performed and expenses incurred If the Client objects to an invoice, it must advise the Consultant in writing giving its reasons within 14 days of receipt of the invoice or the Client's objections will be waived, and the invoice shall conclusively be deemed due and owing. For all amounts unpaid after ninety (90) days of the invoice date Client agrees to pay the Consultant a finance charge of one and one-half percent (1 1/2%) per month, eighteen percent (18%) annually, or the legal maximum rate if it is less.

(8) **Force Majeure.** If, during the term of the agreement or any Project related hereto a force of majeure arises or occurs, including, but not limited to any strike, labor restriction, riot, flood, inclement weather, terrorism, or any act whatsoever that is not within the Consultants control or reasonable ability to prevent (Force Majeure), then the time for the Consultant to complete its performance under this Agreement (Time) shall be excused for the duration of such Force Majeure, or, in the alternative, the Time shall be renegotiated by the patties, and such that the Consultants performance and completion of its responsibilities shall be due and accomplished within a reasonable time thereafter.

(9) **Attorney Fees**. *In the event of litigation relating to the subject matter of this Agreement, the non-prevailing party shall reimburse the prevailing party for all reasonable attorney fees and costs resulting therefrom.*

(10) **Termination.** Obligation to provide further services under this Agreement may be terminated by either party upon seven (7) day written notice in the event of substantial failure by the other party to perform in accordance with the terms hereof through no fault of the terminating party, or upon thirty days' written notice for the convenience of the terminating party.

In the event of any termination, the Consultant shall be paid for all services rendered and expenses incurred to the effective date of termination, and other reasonable expenses incurred by the Consultant as a result of such termination. If the Consultant's compensation is a fixed fee, the amount payable for services will be a proportional amount of the total fee based on the ratio of the amount of the services performed, as reasonably determined by the Consultant, to the total amount of services which were to have been performed.

(11) **Consultants Responsibility**. Pursuant to Section 558.0035 Florida Statues, the Consultants Corporation is the responsible party for the professional services it agrees to provide under this agreement. No individual professional employee, agent, director, officer or principal may be individually liable for negligence arising out of this contract.