City of Mount Dora
Planning and Development
510 N. Baker St.
Mount Dora, FL 32757
352-735-7112
Fax: 352-735-7191
E-mail: plandev@cityofmountdora.com

HISTORIC PRESERVATION BOARD
City Hall, 510 N. Baker Street – Mount Dora, FL
Wednesday, April 27, 2022 - 4:00 P.M.

AGENDA

I. Call To Order

II. Roll Call With Determination Of Quorum

III. Approval Of Minutes for March 30, 2022

IV. Public Participation/Hearing for Non-Agenda Items

V. Certificate of Appropriateness

a. 208 W 10th Ave
   i. Ex Parte Communication Disclosure
   ii. Swearing in of staff/applicants
   iii. Staff presentation
   iv. Public input
   v. Discussion

VI. Other Business

VII. Announcement of next scheduled meeting date: May 25, 2022

VIII. Adjournment

NOTICE: For purposes of Section 286.011, Florida Statues, two or more members of the City Council may be present at this meeting, and this meeting may be considered a City Council meeting.

NOTICE: If any person decides to appeal any decision made at this meeting with respect to any matter considered at this meeting, such person may need a record of these proceedings. For such purpose, a person may need to ensure that a verbatim record of the proceedings is made, which record includes the testimony and evidence upon which the appeal is to be based.

City of Mount Dora
Planning and Development
510 N. Baker St.
Mount Dora, FL 32757
352-735-7112
Fax: 352-735-7191
E-mail: plandev@cityofmountdora.com

HISTORIC PRESERVATION BOARD MEETING
City Hall Conference Room, 510 N. Baker Street, Mount Dora, FL
Wednesday, March 30, 2022 – 4:00 PM

MINUTES

I. CALL TO ORDER

Having been duly noticed as required by law, the March 30, 2022 meeting of the Mount Dora Historic Preservation Board was called to order at 4:00 p.m. by Det Joks. Chairman.

II. ROLL CALL WITH DETERMINATION OF QUORUM

Present: Det Joks, Tracy Gerken, Sharon Nichols, Don Marx, Amanda Kelley, Patricia Huizing,

Absent:

City Staff: Vince Sandersfeld, *Planning Director*; Adam Sumner, *Deputy Planning Director;* Faith Gibbs*, Administrative Coordinator*; Jessica Burnham, *City Clerk*; Sherry Sutphen, *City Attorney, Steve Langley*

III. APPROVAL OF MINUTES

Mr. Marx motioned to approve the February 23, 2022 minutes with corrections. Ms. Kelley seconded the motion and all approved unanimously.

IV. PUBLIC PARTICIPATION / HEARING FOR NON-AGENDA ITEMS

V. PRESENTATION ROYELLOU LANE UNDERGROUND UTILITY CONVERSION PROJECT (INFORMATIONAL)

Mr. Steve Langley, Deputy Electric Utility Director, said that the Electric Department put together a five-year capital plan that includes converting to the underground utility. For this fiscal year, the Royellou alleyway from 5th to 3rd is the first area to be converted. Other commercial areas will be looked at in the years to come. Property owners and utility providers such as Comcast are connected to the poles. All parties are working together to coordinate converting to the underground utility. The city utility department has budgeted to pay for the cost of converting the

City of Mount Dora
Planning and Development
510 N. Baker St.
Mount Dora, FL 32757
352-735-7112
Fax: 352-735-7191
E-mail: plandev@cityofmountdora.com

overhead wires, poles, and transformers to underground infrastructure, while the utility companies and property owners are responsible for paying for their portion. This project will improve reliability in the commercial areas. In the event of a natural catastrophe occurs, such as a hurricane, the underground utility will help ensure power is restored when the main feeder is restored. Construction is scheduled to begin in May and the project should be completed in January 2023. The final design is currently underway. Cost estimates and designs for property owners and utility companies have been provided. The designs should be finalized by the end of the month and will be presented to the Council on the first of May for approval. Due to a boring technique, there will be less impact on traffic during this process. Vince Sandersfeld, Planning Director, stated whatever pavers are removed will be placed back. Before any significant projects begin, they will be brought before the board for informational purposes. Mr. Zimmerman said that there will be some inconveniences during the process. However, there will be communication with the business owners with periodic updates on what is being done. The street light project next year is scheduled for next year. Ms. Huizing asked if any part of the project is funded by a federal agency. Mr. Zimmerman said no and that the project is funded by the city.

VII. OTHER BUSINESS

Mr. Joks said that the application for JK Thai Sushi's outdoor patio was approved. However, three vehicles are parked in the alleyway and this needs to be addressed. Mr. Adam Sumner, Deputy Planning Director, said that there will be a new ordinance restricting alleyway parking except for on private property.

Mrs. Huizing asked for an update on the detached garage request for demolition. Mr. Sandersfeld said that the applicant has not contacted the planning department. The applicant contacted the building department to look inside. However, no reports will be generated until an amended application is submitted. Mr. Jay Smith, a resident, said that the demolition by neglect is what is happening as the building is covered in vines. He asked if code enforcement could handle it. Attorney Sutphen said that if code enforcement is involved, the city would come in and tear the structure down, which is what the Historic Preservation Board wants to prevent from happening. Mrs. Huizing asked for information on the CLG status on next month's agenda and also informed the board of the upcoming Historic Preservation conference on July 27 - 30, 2022, which will be held in Deland if staff and board members want to attend. Mr. Sandersfeld will look into possible funding to cover the costs for those interested in attending if not for this year to include in next year's fiscal budget.

City of Mount Dora
Planning and Development
510 N. Baker St.
Mount Dora, FL 32757
352-735-7112
Fax: 352-735-7191
E-mail: plandev@cityofmountdora.com

Attorney Sutphen said that if anyone wants something on the agenda for the committee to decide in new business to discuss at the following meeting.

VIII. ANNOUNCEMENT OF NEXT SCHEDULED MEETING DATE: April 27, 2022 (4:00 pm)

IX. ADJOURNMENT

Ms. Huizing motioned to adjourn the meeting. Ms. Nichols seconded the motion and it was approved unanimously. The meeting was adjourned at 4:50 p.m.

Det Joks, Chairman
Historic Preservation Board

Faith Gibbs
Administrative Coordinator

DRAFT

NOTICE: In accordance with the *Americans with the Americans with Disabilities Act* of 1990, persons needing special accommodations to participate in this proceeding should contact the Planning and Development department no later than seven (7) days prior to the proceedings. Telephone (352) 735-7112 for assistance. If hearing impaired, telephone the Florida Relay Service numbers (800) 955-8771 (TDD) or (800) 955-8770 (Voice) for assistance.

All regularly scheduled meetings are held the last Wednesday of each month at 4:00 p.m. at City Hall – 510 N. Baker Street.

CITY OF MOUNT DORA

Planning and Development
510 N. Baker St.
Mount Dora, FL 32757
352-735-7113
Fax: 352-735-7191
E-mail: plandev@cityofmountdora.com

MEETING DATE: April 27, 2022

TO: Historic Preservation Board

FROM: Michele Janiszewski, AICP, Senior Planner

RE: **Certificate of Appropriateness; 208 W 10th Avenue (Location); Reroof (Request); Gregory L. Portner (Owner/Applicant)**

Property Information

Site Address:	208 W 10th Avenue	**Site Name:**	None
Zoning District:	R-1A	**Land Use:**	Residential Professional/Office
Current Use:	Single-Family Residential		

Structure Information

Date of Construction:	1928	**Style:**	Bungalow
Structural System:	Wood Frame	**Foundation Type:**	Piers (stone)
Siding:	Wood Shingles	**Porch:**	One Closed
Roof:	Asphalt Shingles	**Windows:**	1/1 Sash
Roof Type:	Cross-Gabled	**Chimneys:**	One (Brick)

Description of proposed alteration: Replace asphalt shingles with standing seam metal panels.

Staff Analysis: The subject structure was constructed as a residence in the Frame Vernacular/Bungalow style in 1928. Roof materials on frame vernacular buildings typically consist of wood shingles, metal, and composition and asbestos shingles, based on the year of construction. Metal panels are an appropriate material for Frame Vernacular historic homes and similar applications have been approved by the City's Historic Preservation Board. The applicant has provided sample pictures of a standing seam roof in a similar color which is proposed for the subject structure. The sample pictures depict an off-white standing seam metal panel roof.

In 1998, a detached garage was developed on the subject property and was constructed with a seam metal panel roof. The proposed reroof materials for the dwelling unit will complement the existing roof on the detached garage.

The structure is developed with a brick chimney which will not be altered with the exception of installing new flashing (material installed at the base of the chimney where it meets the roof to create a waterproof seal). The proposed change from an asphalt shingle roof to a metal roof is appropriate.

The request for the reroof material change from asphalt shingles to standing seam metal panels is consistent with Section 3.6.4 of the City's Land Development Code and adopted Historic Design Guidelines (attached applicable guidelines).

Staff Recommendation: Staff recommends approval with adherence to the enclosed guidelines.

Attachments:
Vicinity Map
Photos
1987 Site Form
2008 Site Form
2020 Site Form
Residential Reroof Guidelines
Application

CITY OF MOUNT DORA
HISTORIC DESIGN GUIDELINES
Residential Reroof Guidelines (Pages 124 -127)

Recommendations:

- Identify, retain, and preserve roofs – and their functional and decorative features – that are important in defining the overall historic character of the building. This includes the roof's shape, such as hip, gambrel, and mansard; decorative features such as cupolas, cresting, chimneys and weathervanes; and roofing material such as slate, wood, clay tile, and metal, as well as its size, color, and patterning.
- Provide adequate roof drainage and insure that the roofing material provides a weather-tight covering for the structure.
- Protect a leaking roof with plywood or tarp and building paper until it can be properly repaired.
- Replace deteriorated roof surfacing with matching materials or new materials, such as composition shingles or tabbed asphalt shingles, in dark shades that match the original in composition, size, shape, color, and texture.
- Retain or replace where necessary: dormer windows, cupolas, cornices, brackets, chimneys, cresting, weather vanes, and other distinctive architectural or stylistic features that give a roof its essential character.
- Repair a roof by reinforcing the historic materials which comprise roof features. Repairs will also generally include the limited replacement in kind – or with compatible substitute material – of those extensively deteriorated or missing parts of features when there are surviving prototypes such as cupola louvers, dentils, dormer roofing; or slates, tiles, or wood shingles on a main roof.
- Replace in kind an entire feature of the roof that is too deteriorated to repair – if the overall form and detailing are still evident – using the physical evidence as a model to reproduce the feature. Examples can include a large section of roofing, or a dormer or chimney. If using the same kind of material is not technically or economically feasible, then a compatible substitute material may be considered.
- Design and construct a new feature when the historic feature is completely missing, such as a chimney or cupola. It may be an accurate restoration using historical, pictorial, and physical documentation; or be a new design that is compatible with the size, scale, material, and color of the historic building.

Avoid:

- Removing a feature of the roof that is unrepairable, such as a chimney or dormer, and not replacing it; or replacing it with a new feature that does not convey the same visual appearance.
- Constructing additional stories so that the historic appearance of the building is radically changed.
- Removing a major portion of the roof or roofing material that is repairable, then reconstructing it with new material in order to create a uniform or "improved" appearance.
- Changing the essential character of a roof by adding inappropriate features such as dormers, vents, skylights, air-conditioners, and solar collectors which are visible from public right-of-ways.
- Stripping the roof of sound historic materials such as slate, clay tile, wood, and architectural metal.
- New materials, such as roll roofing, whose composition, size, shape, color, and texture alter the appearance of the building.
- Using a substitute material for the replacement part that does not convey the visual appearance of the surviving parts of the roof or that is physically or chemically incompatible.

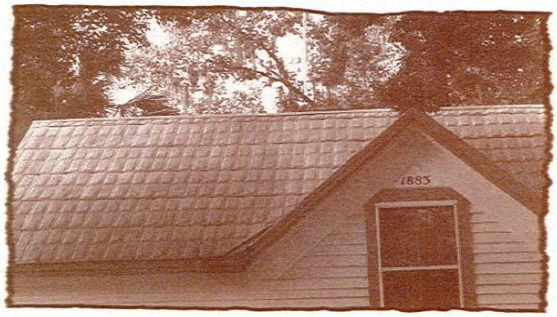

Two styles of pressed metal roofing shingles found on many of Mount Dora's historic homes.

ROOFS AND ROOF SURFACES

APPLICABLE STANDARDS: 2,4,5,6,9

2. Retention of Distinguishing Architectural Character

4. Retention of Significant Later Alterations/ Additions

5. Sensitive Treatment of Distinctive Features and Craftsmanship

6. Repair/Replacement of Deteriorated or Missing Architectural Features Based on Historical Evidence

9. Compatible contemporary Design for New Alterations/Additions

Roofs are highly visible conponents of historic buildings. They are an integral part of a building's overall design and often help define its architectural style. Roof shapes in Mount Dora include gable, hip, flat and gambrel. Historic roofing materials include standing seam metal, pressed metal shingle, composition shingle and barrel tile.

Roofs perform an essential function in keeping a building weathertight. As a result, they are particularly subject to change. In Mount Dora, the

most common original roofing materials were embossed or crimped sheet metal and sawn wood shingles. Virtually all original wood shingle roofs have been removed or covered over, often with ornamental sheet metal. Such historic changes to roofs have gained a significance in their own right and should be respected under Standard 4.

Where existing roofing material is non-original and non-significant, there is greater flexibility. The existing roof may be retained, replaced in a historically accurate manner, or treated in a contemporary style in compliance with Standards 6 and 9. Even if existing surfacing is inappropriate, the replacement material must be compatible with the overall design of the building.

Rooftop additions are another common change to historic buildings. They are generally not suitable for smaller buildings of three stories or less or for buildings with very distinctive roof lines. They can, however, meet Standard 9 if certain conditions are met. The addition should be designed to be distinguished from the historic portion of the building, be set back from the wall plane and be placed so it is inconspicuous when viewed from the street.

Barrel Tiles are typical roofing materials used in Mediterranean Influence architecture.

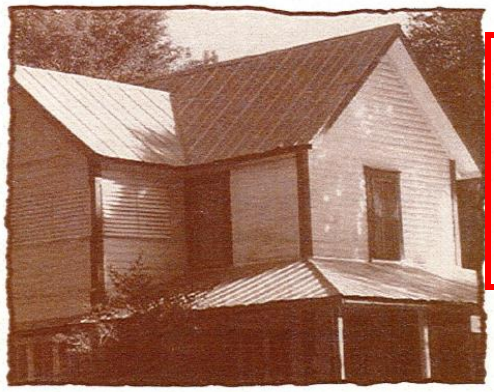

The Col. Alexander House on 8th & Baker has a standing-seam metal roof.

The Col. Alexander House on 8th & Baker has a standing-seam metal roof.

VICINITY MAP

N

N.T.S.

Legend

Subject Property

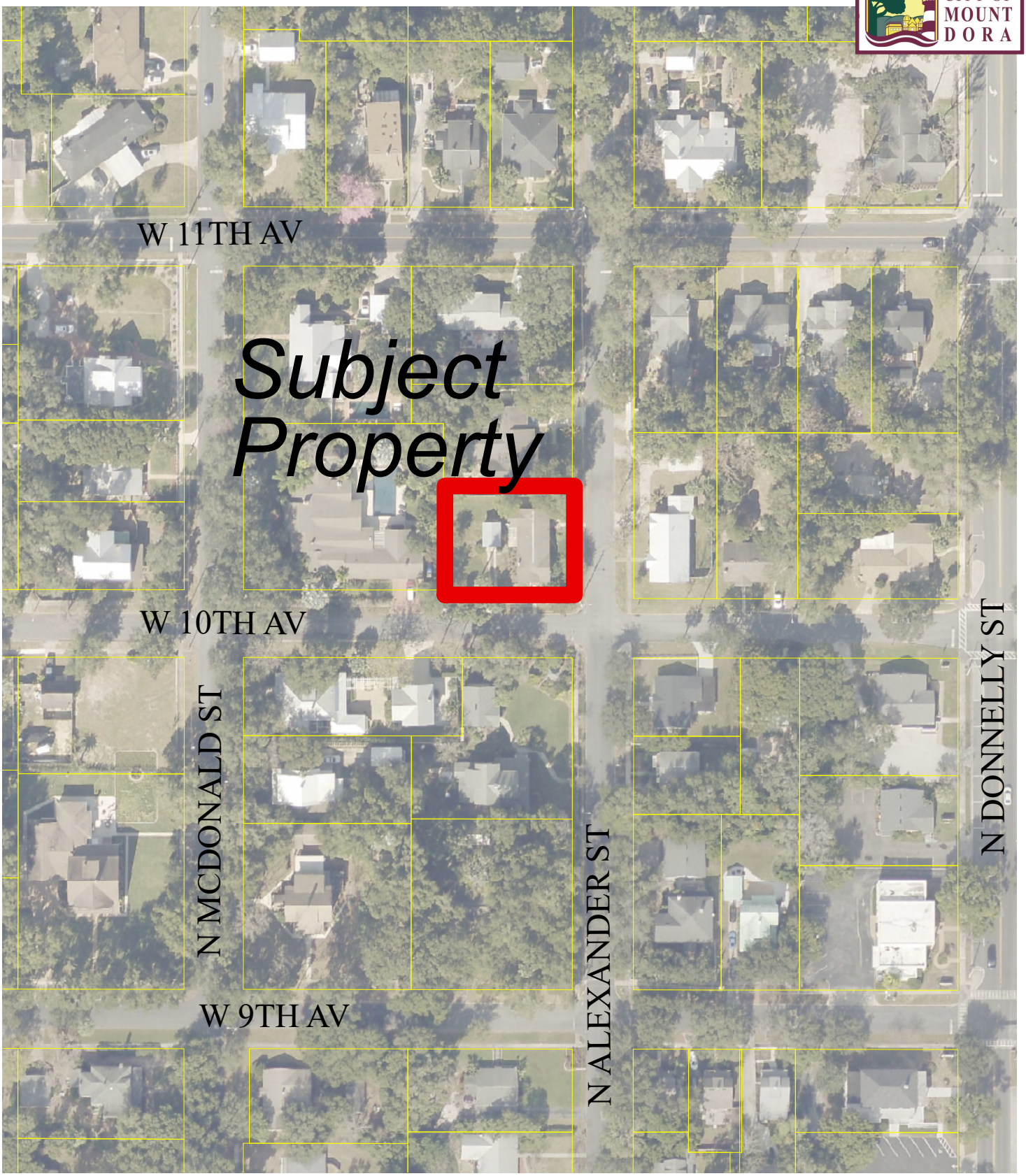

Date: 4/13/2022

Prepared by: Mount Dora Planning and Development Dept * 510 N. Baker Street, Mount Dora, FL 32757 * 352-735-7112

PHOTOS
April 13, 2022
208 W. 10th Ave

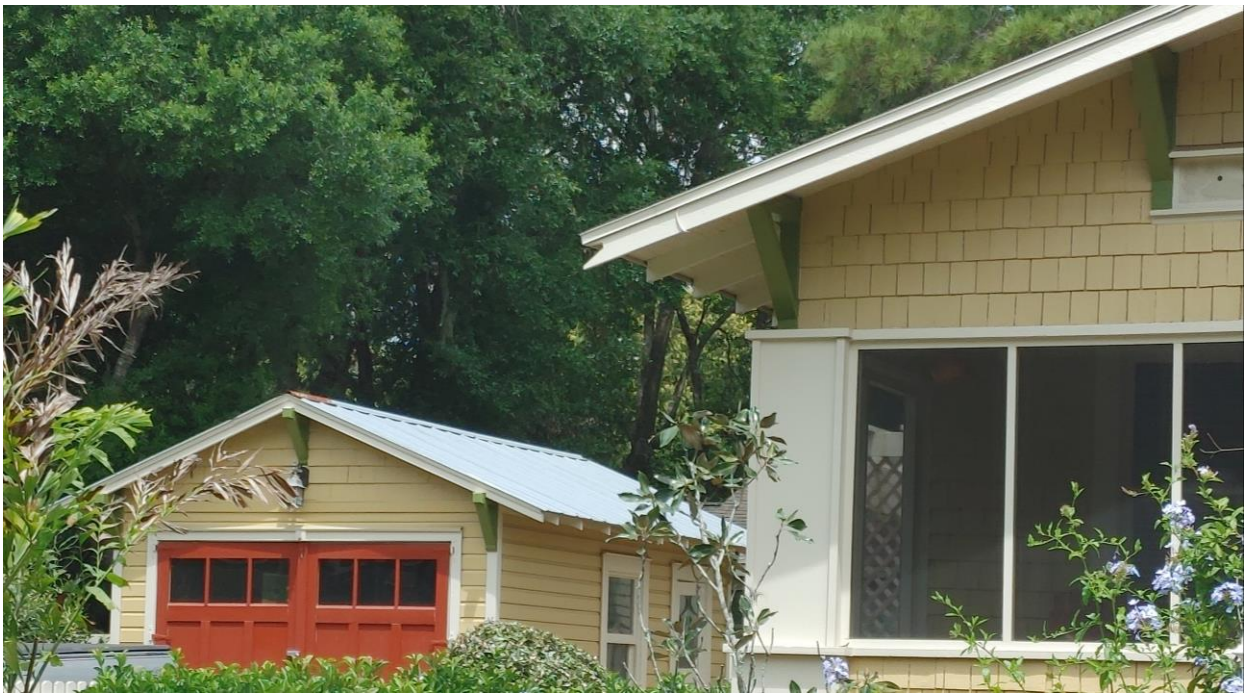

South Elevation

PHOTOS
April 13, 2022
208 W. 10th Ave

East Elevation

FLORIDA MASTER SITE FILE K 2-4

Site Inventory Form

Site No. _____

Site Name _____ Survey Date 8709

Address of Site 208 W. 10th Ave., Mt. Dora Fl. 32757

Instruction for locating _____

Location Mrs. S.D. Short's Sub — Subdivision Name; Block No.; 02500 — Lot No.

County Lake

District name if applicable _____

Owner of Site: Name Eissler, Emil

Address Route 2, Box 1022 E, Mt. Dora Fl 32757

Type of Ownership private Recording Date 8711

Recorder: Name & Title Barr, Melanie (Historic Preservation Consultant)

Address P.O. Box 17, Gianesville Fl. 32602

Condition of Site: (Check One)
- ___ Excellent
- x Good
- ___ Fair
- ___ Deteriorated

Integrity of Site: (Check One or More)
- x Altered
- ___ Unaltered
- x Original Use
- ___ Restored/Date
- ___ Moved/Date

Original Use private residence

Present Use private residence

Dates c. +1928

Cultural Phase American

Period 20th Century

NR Classification Category building Date Listed on NR _____

Threats to Site: (Check One or More)
- ___ Zoning
- ___ Development
- ___ Deterioration
- ___ Transportation
- ___ Fill
- ___ Dredge
- ___ Borrowing
- ___ Other (See Remarks Below)

Areas of Significance: Early Community Development

Significance:

This house may have been built as a speculative house by Penny Dickson. She sold it to a German man who renovated furniture. He later moved closer to East Town to be near his workshop.

CT 10-11

Architect
Builder
Style and/or Period bungalow
Plan Type irregular: irregular
Exterior Fabric(s) wood: shingles, butt
Structural System(s) wood frame: balloon
Porches S & E/ 1 story porch, screened
Orientation S
Foundation piers: concrete block, cast
Roof Type cross gable
Secondary Roof Structure(s)
Roof Surfacing asphalt shingles
Window Type DHS, 1/1, wood
Ornament Exterior
Chimney
Chimney Location
No. of Chimneys No. of Stories 1
No. of Dormers Outbuildings
Surroundings
Map Reference (incl. scale & date) USGS Eustis 7.5 Min. 1966 (PR1980)

Latitude and Longitude

Site Size (approx. acreage of property) LT1

LOCATION SKETCH OR MAP

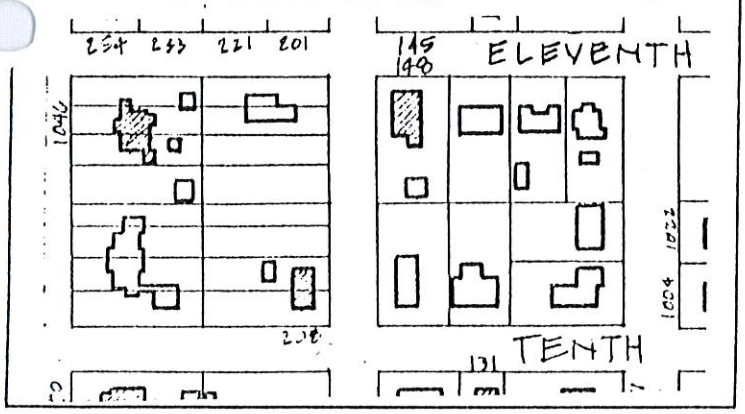

Township	Range	Section
19	27	30

UTM Coordinates:

Zone Easting Northing

Photographic Records Number K 2-4
Please attach Photographic Print

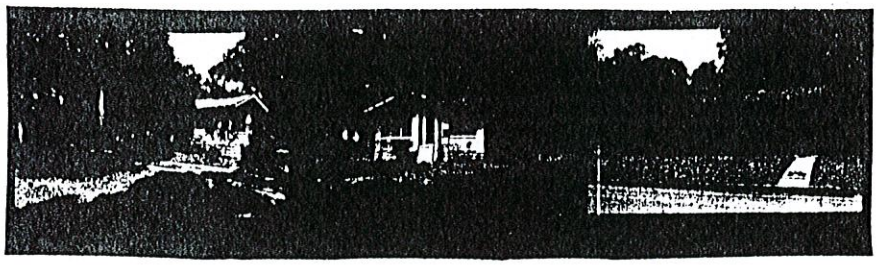

Florida Master Site File

HISTORICAL STRUCTURE FORM

Electronic Version 1.1.0

Site #8 LA00431
Recorder # 57
Field Date 3/15/2008
Form Date 3/15/2008
FormNo 200803
FormNo = Field Date (YYYYMM)

First Site Form Recorded for this Site? NO

GENERAL INFORMATION

Site Name (address if none) 208 W 10th Ave
Multiple Listing (DHR only)
Other Names >>
Survey or Project Name
Survey#
National Register Category Building(s)

LOCATION & IDENTIFICATION

Address

Street No.	Direction	Street Name	Street Type	Direction Suffix
208	West	10th	Avenue	

Cross Streets (nearest/ between)
City / Town (within 3 miles) Mount Dora
In Current City Limits? YES
County Lake
Tax Parcel #(s)
Subdivision Name
Block
Lot
Ownership
Name of Public Tract (e.g., park)
Route to (especially if no street address)

MAPPING

USGS 7.5' Map Name
Publication Date >> EUSTIS;1980
Township:
Range:
Section:
1/4 section:
>> 19S ;27E ;30;UNSP
Irregular Section Name:
Landgrant
UTM: Zone
Easting
Northing
Plat or Other Map (map's name, location)

DESCRIPTION

Style Bungalow
Other Style
Exterior Plan Irregular
Other Exterior Plan
Number of Stories 1
Structural System(s) >> Wood frame
Other Structural System(s)
Foundation Type(s) >> Continuous
Other Foundation Types
Foundation Material(s) >> Poured Concrete Footing
Other Foundation Material(s)
Exterior Fabric(s) >> Wood shingles
Other Exterior Fabric(s)
Roof Type(s) >> Gable
Other Roof Type(s)
Roof Material(s) >>
Other Roof Material(s)
Roof Secondary Structure(s) (dormers etc) >>
Other Roof Secondary Structure(s)
Number of Chimneys 1
Chimney Material
Other Chimney Material(s)
Chimney Location(s)

HISTORICAL STRUCTURE FORM

8LA00431

DESCRIPTION (continued)

Window Descriptions metal sash, 1/1

Main Entrance Description (stylistic details)

Porches: #open ____ #closed 1 #incised ____ Location(s)

Porch Roof Types(s)

Exterior Ornament

Interior Plan Other Interior Plan

Condition Good

Structure Surroundings

Commercial: Residential: MOSTly this category

Institutional: Undeveloped:

Ancillary Features (Number / type of outbuildings, major landscape features)

Archaeological Remains (describe):

If archaeological remains are present, was an Archaeological Site Form completed? ____

Narrative Description (optional)

HISTORY

Construction year 1928

Architect (last name first): Builder (last name first):

Changes in Locations or Conditions

Type of Change	Year of Change	Date Change Noted	Description of Changes
>>			

Structure Use History

Use Year Use Started Year Use Ended >> Private residence;1928;

Other Structure Uses

Ownership History (especially original owner, dates, profession, etc.)

RESEARCH METHODS

Research Methods >> Examine local tax records

Other research methods

SURVEYOR'S EVALUATION OF SITE

Potentially Eligible for a Local Register? YES Name of Local Register if Eligible

Idividually Eligible for National Register? NO

Potential Contributor to NR District? YES

Area(s) of historical significance >>

Other Historical Associations

Explanation of Evaluation (required) Because the resource retains much of its historic integrity and is located in a well-preserved collection of historic buildings, it appears to contribute to a historic district.

HISTORICAL STRUCTURE FORM

8LA00431

DOCUMENTATION (Photos, Plans, etc.)

Photographic Negatives or Other Collections Not Filed with FMSF, Including Field Notes, Plans, other Important Documents.

Document type: _____ Maintaining Organization: _____

File or Accession #: _____ Descriptive Information: _____

>>

RECORDER INFORMATION

Recorder Name (Last, First) Bland, Myles

Recorder Address / Phone 4104 St. Augustine Road Jacksonville, FL

Recorder Affiliation Bland & Associates, Inc Other Affiliation _____

Is a Text-Only Supplement File Attached (Surveyor Only)? NO

****** MASTER SITE FILE USE ONLY ******

SHPO's Evaluation of Resource

_____ Date _____

Cultural Resource Type: SS

Electronic Form Used: S110

Form Type Code: NORM

Form Quality Ranking: NEW

Form Status Code: SCAT

Supplement Information Status: NO SUPPLEMENT

Supplement File Status: NO SUPPLEMENT FILE

FMSF Staffer: _____

Computer Entry Date: 5/21/2008

Form Comments: _____

REQUIRED PAPER ATTACHMENTS	(1) USGS 7.5" MAP WITH STRUCTURE PINPOINTED IN RED (2) LARGE SCALE STREET OR PLAT MAP (3) PHOTO OF MAIN FACADE, B&W, AT LEAST 3"X5"

LA00431-200803

Supplementary Printout

> **USGS map name/year of publication or revision:**
EUSTIS;1980

> **Township/Range/Section/Qtr:**
19S ;27E ;30;UNSP

> **Structural system(s):**
Wood frame

> **Foundation types:**
Continuous

> **Foundation materials:**
Poured Concrete Footing

> **Exterior fabrics:**
Wood shingles

> **Roof types:**
Gable

> **Roof materials:**

> **Roof secondary structures (dormers etc):**

> **Change status/year changed/date noted/nature:**

> **Original, intermediate, present uses/year started/year ended:**
Private residence;1928;

> **Research methods:**
Examine local tax records
FL Master Site File-Cultural Resources
Pedestrian

> **Area(s) of historical significance:**

> **Repositories: Collection/Housed/Accession#/Describe**

> **[Other name(s)]:**

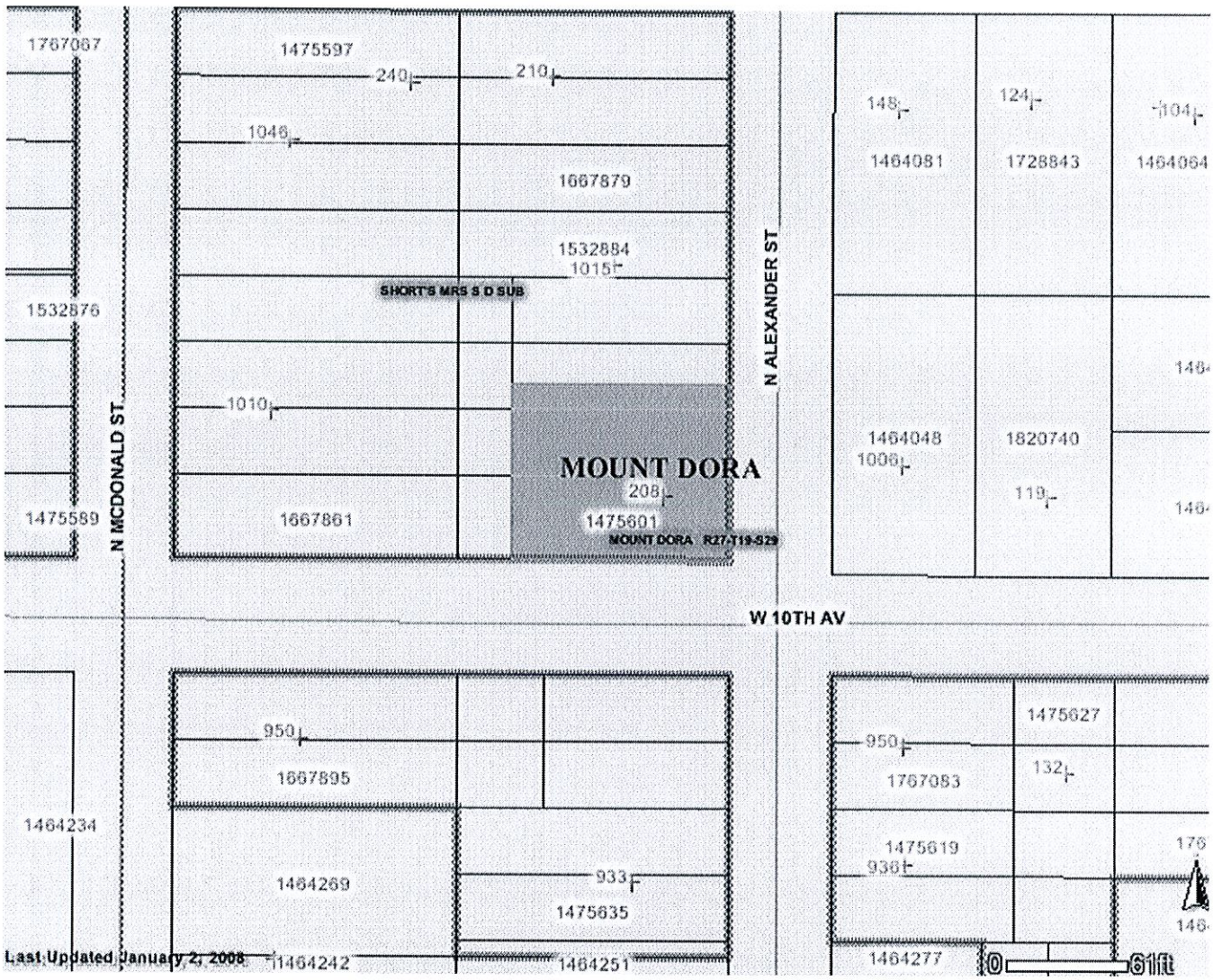
1767067
1475597
240
210
1046
1667879
1532884
1015
SHORT'S MRS S D SUB
1532876
1010
MOUNT DORA
208
1475601
MOUNT DORA R27-T19-S29
1475589
1667861
N MCDONALD ST
N ALEXANDER ST
148
124
104
1464081
1728843
1464064
1464048
1006
1820740
119
W 10TH AV
950
1667895
1464234
1464269
933
1475635
1464242
1464251
1475627
950
1767083
132
1475619
930
1464277
0
61ft
Last Updated January 2, 2008

RN57

LA431

57

LA
431

57

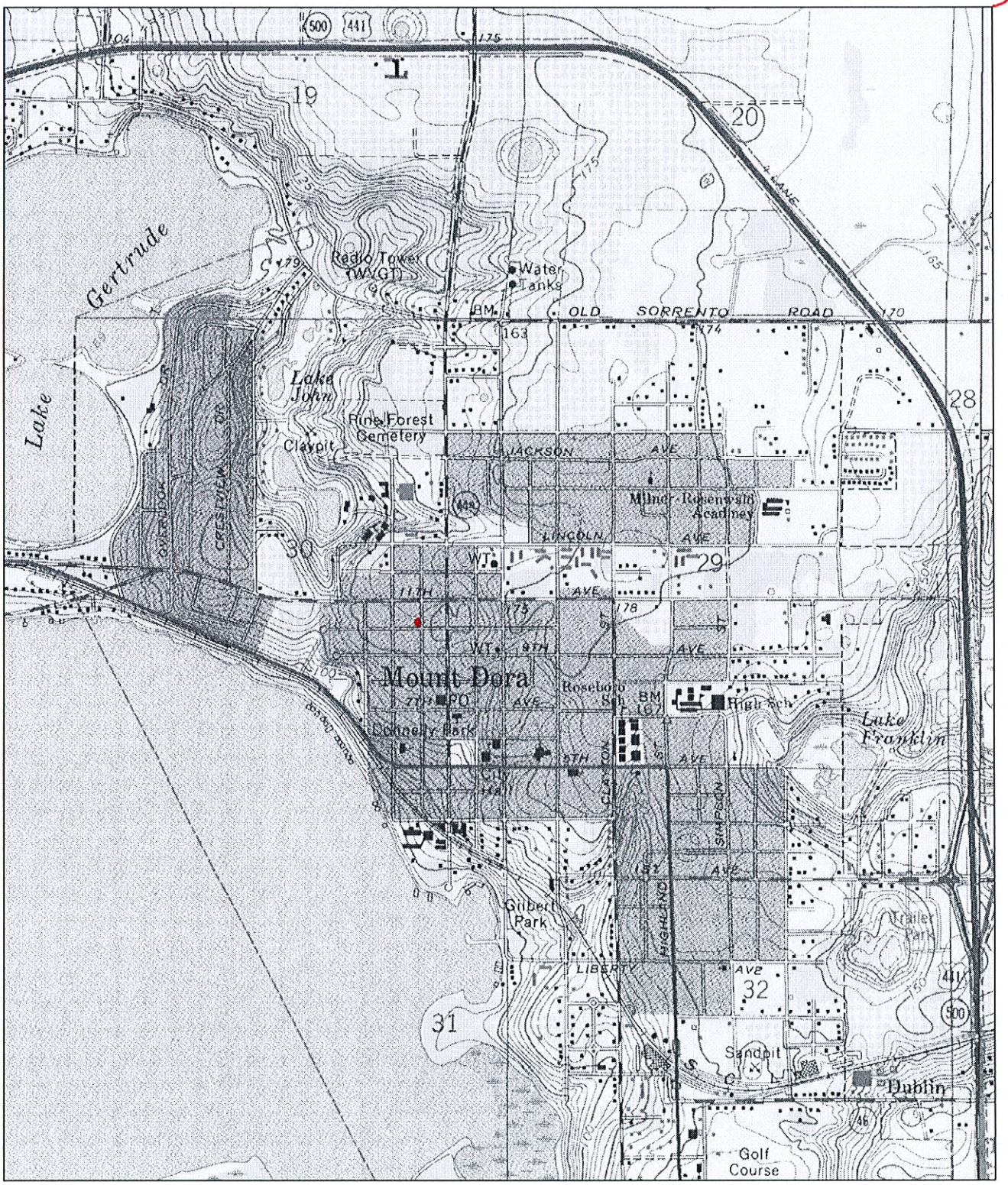

N

0 — 0.5 Mi

0 — 2000 Ft

Map provided by MyTopo.com

LA431

Clear Form Values

Page 1

☐ Original
☒ Update

HISTORICAL STRUCTURE FORM
FLORIDA MASTER SITE FILE
Version 5.0 3/19

Site#8 LA00431
Field Date 5-12-2020
Form Date 7-1-2020
Recorder # 185

Shaded Fields represent the minimum acceptable level of documentation.
Consult the *Guide to Historical Structure Forms* for detailed instructions.

Site Name(s) (address if none) 208 West 10th Ave Multiple Listing (DHR only) _____
Survey Project Name Mount Dora Historic Site Survey Survey # (DHR only) _____
National Register Category (please check one) ☒building ☐structure ☐district ☐site ☐object
Ownership: ☐private-profit ☐private-nonprofit ☐private-individual ☐private-nonspecific ☐city ☐county ☐state ☐federal ☐Native American ☐foreign ☐unknown

LOCATION & MAPPING

Clear Location Values

	Street Number	Direction	Street Name	Street Type	Suffix Direction
Address:	208	W	10th	Avenue	

Cross Streets (nearest / between) SE corner of N Alexander St & W 10th Ave
USGS 7.5 Map Name EUSTIS USGS Date 2018 Plat or Other Map _____
City / Town (within 3 miles) Mount Dora In City Limits? ☒yes ☐no ☐unknown County Lake
Township 19S Range 27E Section 30 ¼ section: ☐NW ☐SW ☐SE ☐NE Irregular-name: _____
Tax Parcel # 30-19-27-0700-000-02500 Landgrant _____
Subdivision Name Mrs S D Shorts Subdivision Block _____ Lot _____
UTM Coordinates: Zone ☐16 ☒17 Easting 436883 Northing 3186561
Other Coordinates: X: -81.64680 Y: 28.80507 Coordinate System & Datum WGS84
Name of Public Tract (e.g., park) _____

HISTORY

Clear History Values

Construction Year: 1928 ☒approximately ☐year listed or earlier ☐year listed or later
Original Use Unknown From (year): 1928 To (year): _____
Current Use Private Residence (House/Cottage/Ca From (year): _____ To (year): 2020
Other Use _____ From (year): _____ To (year): _____
Moves: ☐yes ☒no ☐unknown Date: _____ Original address N/A
Alterations: ☐yes ☐no ☒unknown Date: _____ Nature _____
Additions: ☒yes ☐no ☐unknown Date: 1-1-2000 Nature _____
Architect (last name first): Unknown Builder (last name first): Unknown
Ownership History (especially original owner, dates, profession, etc.)

Appears to have been built as a speculative house by Penny Dickerson. The home was sold to a German man who renovated furniture.

Is the Resource Affected by a Local Preservation Ordinance? ☒yes ☐no ☐unknown Describe Historic District Boundary

DESCRIPTION

Clear Description Values

Style Frame Vernacular Exterior Plan Irregular Number of Stories 1
Exterior Fabric(s) 1. Wood shingles 2. _____ 3. _____
Roof Type(s) 1. Cross-gabled 2. _____ 3. _____
Roof Material(s) 1. Asphalt shingles 2. _____ 3. _____
Roof secondary strucs. (dormers etc.) 1. _____ 2. _____
Windows (types, materials, etc.)

1/1 sash windows

Distinguishing Architectural Features (exterior or interior ornaments)

Exposed rafter tails, brackets, rectangular gable vents on front of house, shingle cladding

Ancillary Features / Outbuildings (record outbuildings, major landscape features; use continuation sheet if needed.)

Detached garage

DHR USE ONLY	OFFICIAL EVALUATION	DHR USE ONLY
NR List Date _____	SHPO – Appears to meet criteria for NR listing: ☐yes ☐no ☐insufficient info Date _____ Init. _____	
☐Owner Objection	KEEPER – Determined eligible: ☐yes ☐no Clear Check Boxes Date _____	
	NR Criteria for Evaluation: ☐a ☐b ☐c ☐d (see *National Register Bulletin 15*, p. 2)	

Florida Master Site File / Div. of Historical Resources / R. A. Gray Bldg / 500 S Bronough St., Tallahassee, FL 32399-0250
Phone **850.245.6440** / Fax **850.245.6439** / E-mail **SiteFile@dos.myflorida.com**

HISTORICAL STRUCTURE FORM

Site #8 LA00431

DESCRIPTION (continued)

Clear Description Values

Chimney: No. 1 Chimney Material(s): 1. Brick 2.

Structural System(s): 1. Wood frame 2. 3.

Foundation Type(s): 1. Piers 2.

Foundation Material(s): 1. Stone 2.

Note: you may use the last box in each field to type in an answer that does not appear in the list provided

Main Entrance (stylistic details)

6 wooden steps to the porch screen door. The door to the main entrance is located inside screened front porch.

Porch Descriptions (types, locations, roof types, etc.)

Screened closed porch with large columns

Condition (overall resource condition): ☒ excellent ☐ good ☐ fair ☐ deteriorated ☐ ruinous

Narrative Description of Resource

The frame vernacular structure has been well-maintained and has distinct architectural features that give it an individualistic character in the historic neighborhood.

Archaeological Remains ☐ Check if Archaeological Form Completed

RESEARCH METHODS (select all that apply)

☐ FMSF record search (sites/surveys)	☐ library research	☒ building permits	☒ Sanborn maps
☐ FL State Archives/photo collection	☐ city directory	☒ occupant/owner interview	☒ plat maps
☒ property appraiser / tax records	☐ newspaper files	☐ neighbor interview	☐ Public Lands Survey (DEP)
☐ cultural resource survey (CRAS)	☒ historic photos	☐ interior inspection	☐ HABS/HAER record search

☒ other methods (describe) Field visit and documentation

Bibliographic References (give FMSF manuscript # if relevant, use continuation sheet if needed)

OPINION OF RESOURCE SIGNIFICANCE

Clear Significance Values

Appears to meet the criteria for National Register listing individually? ☐ yes ☒ no ☐ insufficient information

Appears to meet the criteria for National Register listing as part of a district? ☒ yes ☐ no ☐ insufficient information

Explanation of Evaluation (**required**, whether significant or not; use separate sheet if needed)

The residential structure does not appear to meet criteria for the National Register listing, however, it does contribute to the overall character of the Mount Dora Historic District.

Area(s) of Historical Significance (see *National Register Bulletin 15*, p. 8 for categories: e.g. "architecture", "ethnic heritage", "community planning & development", etc.)

1. Architecture 3. 5.

2. Community planning & developm 4. 6.

DOCUMENTATION

Clear Documentation Values

Accessible Documentation Not Filed with the Site File - including field notes, analysis notes, photos, plans and other important documents

1) Document type Maintaining organization

Document description File or accession #'s

2) Document type Maintaining organization

Document description File or accession #'s

RECORDER INFORMATION

Recorder Name Samantha Kanach Affiliation Other

Recorder Contact Information 6500 North Andrews Avenue, Fort Lauderdale, Florida 33309 / 954-776-1616

(address / phone / fax / e-mail)

Required Attachments

❶ **USGS 7.5' MAP WITH STRUCTURE LOCATION CLEARLY INDICATED**

❷ **LARGE SCALE STREET, PLAT OR PARCEL MAP** (available from most property appraiser web sites)

❸ **PHOTO OF MAIN FACADE, DIGITAL IMAGE FILE**

When submitting an image, it must be included in digital AND hard copy format (plain paper grayscale acceptable). Digital image must be at least 1600 x 1200 pixels, 24-bit color, jpeg or tiff.

Street Map

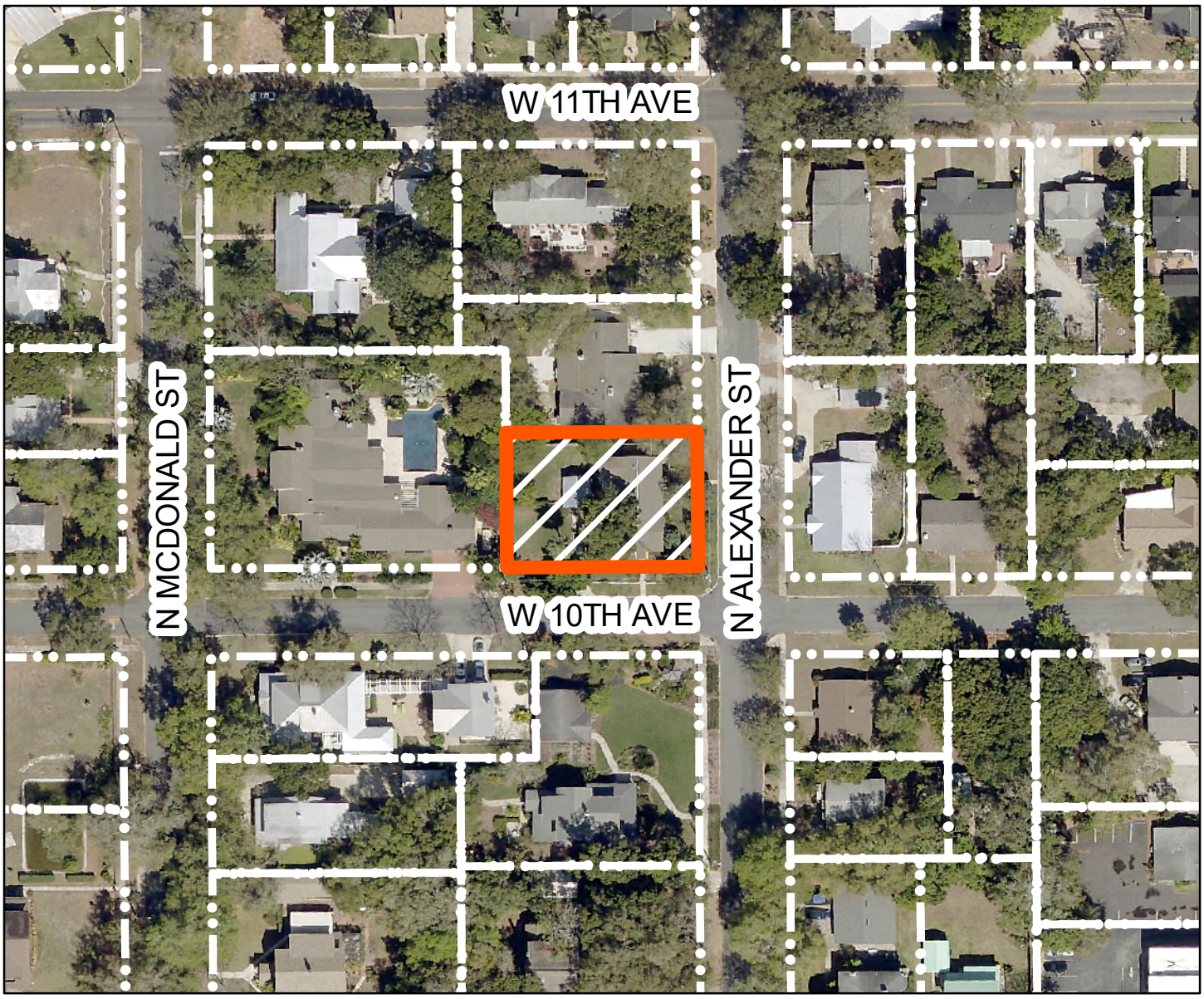

N

208 WEST 10TH AVE MOUNT DORA FL 32757

0 40 80 160 Feet

LA00431

KCI TECHNOLOGIES

Data Sources: Lake County, City of Mount Dora

USGS Map

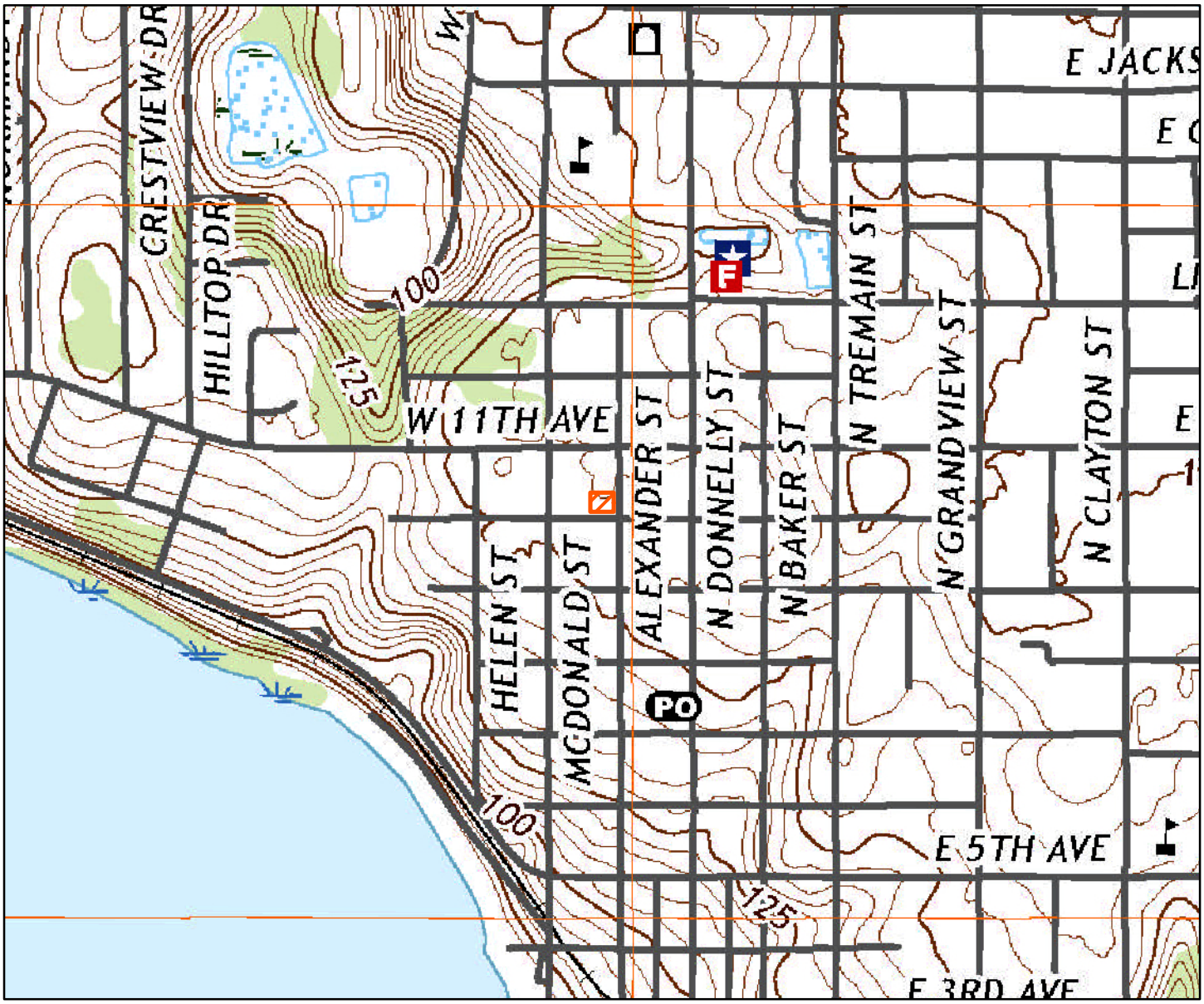

N

LA00431

208 WEST 10TH AVE MOUNT DORA FL 32757

Source: United States Geological Survey Eustis, FL 2018

KCI TECHNOLOGIES

CITY OF MOUNT DORA

Planning and Development
510 N. Baker St.
Mount Dora, FL 32757
352-735-7112
Fax: 352-735-7191
E-mail: plandev@cityofmountdora.com

CERTIFICATE OF APPROPRIATENESS APPLICATION FORM
(Renovations, Additions and New Construction)

208 W. 10TH AVE
Property Address

Property Owner (If Different From Applicant)

Applicant Name: GREGORY L. PORTNER

Address: 35 BUCKINGHAM DR.

City/St/Zip: WYOMISSING, PA 19610

Business Phone | 610-816-1770 **Alternate Phone** | gportner@hydrojet.com **Email**

Full Description of Proposed Alteration(s) or Construction. (Attach additional documentation if needed)

REMOVE EXISTING SHINGLE ROOF AND INSTALL NEW METAL ROOF SYSTEM

Current Building Use (i.e. residential or commercial): RESIDENTIAL.
Is there currently a chimney on the building? YES
If so, will the chimney be affected? YES - NEW FLASHING TO BE INSTALLED

Required Documentation:

Renovations or Additions:
1. Property Record Card
2. Survey
3. Elevation drawings of each side of the building affected by the proposed work
   a. Drawings must be to scale and clearly illustrate the detail of the work proposed
   b. (2) Drawings labeled with existing and proposed
4. Materials Listing or Cut Sheet
5. Photographs of existing structure
6. $50 Application Fee

New Construction on Undeveloped Land:
1. Survey
2. Elevations of the Surrounding Structures which will be influenced by New Structure
3. Proposed Design(s) of New Structure
4. Intended Materials to be Used on Exterior of Structure
5. $100 Application Fee

Demolition Requests:
1. Please see separate application for demolition requests.
2. $100 Application Fee

PLEASE NOTE - APPLICATIONS MUST BE RECEIVED THREE WEEKS PRIOR TO THE MEETING.
INCOMPLETE APPLICATIONS WILL NOT BE PROCESSED.

Note: This application is for a Certificate of Appropriateness from the Historic Preservation Board only. The proposed work must also meet Zoning and Building Code Requirements. Submission of the application implies permission is granted to the City of Mount Dora to inspect and document any necessary information needed to process this request.

_____

Applicant/Owner Signature

Land Development Code
3.6.4 Certificate of appropriateness.

1. *Basic requirements.*

   a. *Certificate of appropriateness required.*
      1) No building, structure, appurtenance, improvement or landscape feature within the City of Mount Dora, which has been designated a historic site, will be erected, altered, restored, renovated, excavated, relocated, or demolished until a certificate of appropriateness regarding any exterior architectural features, landscape features, or site improvements has been approved under the procedures in this section.
      2) A certificate of appropriateness shall be required for the erection, alteration, restoration, renovation, excavation, relocation, or demolition of any building, structure or appurtenance within any historic district established by the City of Mount Dora under the procedures specified in this ordinance.
      3) A certificate of appropriateness shall be required for any material change in existing walls, fences and sidewalks or construction of new walls, fences and sidewalks.
   b. *Architectural features.* Architectural features include, but are not limited to, the architectural style, scale, massing, siting, general design and general arrangement of the exterior of the building or structure, including the type, style of roofs, windows, doors and appurtenances.
   c. *Landscape features.* Landscape features and site improvements will include, but are not limited to, walls, fences, courtyards, signs, and exterior lighting.
   d. *Plan approval required.* No certificate of appropriateness will be approved unless the architectural plans for said construction, reconstruction, relocation, alteration, excavation, restoration, renovation, or demolition are approved by the board.
   e. *Relocation.* Relocation of a building or structure will include, but not be limited to, moving a building or structure into or within any historic district, and moving a historic building or structure within or out of the City of Mount Dora or any historic district.
   f. *Certificate not required.* A certificate of appropriateness will not be required for general, occasional maintenance of any historic buildings, structure or site, or any building or structure within a historic district. General, occasional maintenance will include, but is not limited to, lawn and landscaping care, painting and minor repairs that restore or maintain the historic site or current character of the building or structure. General, occasional maintenance will not include any of the activities described and defined in paragraphs 1. through 5. of this subsection, nor will it include an addition or change of awnings, signs, or alterations to porches and steps. A certificate of appropriateness will not be required for any interior alteration, construction, reconstruction, restoration, renovation or demolition. General, occasional maintenance and repair shall also include any ordinary maintenance which does not require a building permit for the city.

PROPERTY RECORD CARD

General Information

Name:	PORTNER GREGORY L & DOLORES E	**Alternate Key:**	1475601
Mailing Address:	35 BUCKINGHAM DR WYOMISSING, PA 19610-3101 *Update Mailing Address*	**Parcel Number:**	30-19-27-0700-000-02500
		Millage Group and City:	00MD Mount Dora
		2021 Total Certified Millage Rate:	18.7017
		Trash/Recycling/Water/Info:	*My Public Services Map*
Property Location:	208 W 10TH AVE MOUNT DORA *Update Property Location*	**Property Name:**	-- *Submit Property Name*
		School Information:	*School Locator & Bus Stop Map* *School Boundary Maps*
Property Description:	MOUNT DORA, MRS S D SHORT'S SUB LOT 25, 26--LESS W 27 FT--, S 13 FT OF LOT 27--LESS W 27 FT-- PB 2 PG 26 ORB 5745 PG 728		

NOTE: This property description is a condensed/abbreviated version of the original description as recorded on deeds or other legal instruments in the public records of the Lake County Clerk of Court. It may not include the Public Land Survey System's Section, Township, Range information or the county in which the property is located. It is intended to represent the land boundary only and does not include easements or other interests of record. This description should not be used for purposes of conveying property title. The Property Appraiser assumes no responsibility for the consequences of inappropriate uses or interpretations of the property description.

Land Data

Line	Land Use	Frontage	Depth	Notes	No. Units	Type	Class Value	Land Value
1	SINGLE FAMILY (0100)	78	105		8190.000	FD	$0.00	$70,202.00

Click here for Zoning Info **FEMA Flood Map**

Residential Building(s)

Building 1

Residential Building Value: $194,777.00

Summary

Year Built: 1929	Total Living Area: 1327	Central A/C: Yes	Attached Garage: No
Bedrooms: 2	Full Bathrooms: 2	Half Bathrooms: 0	Fireplaces: 1

Incorrect Bedroom, Bath, or other information?

Section(s)

Section Type	Ext. Wall Type	No. Stories	Floor Area
FINISHED LIVING AREA (FLA)	Wood (01)	1.00	1327
OPEN PORCH UNFINISHED (OPU)		1.00	144
SCREEN PORCH FINISHED (SPF)		1.00	168

View Larger / Print / Save

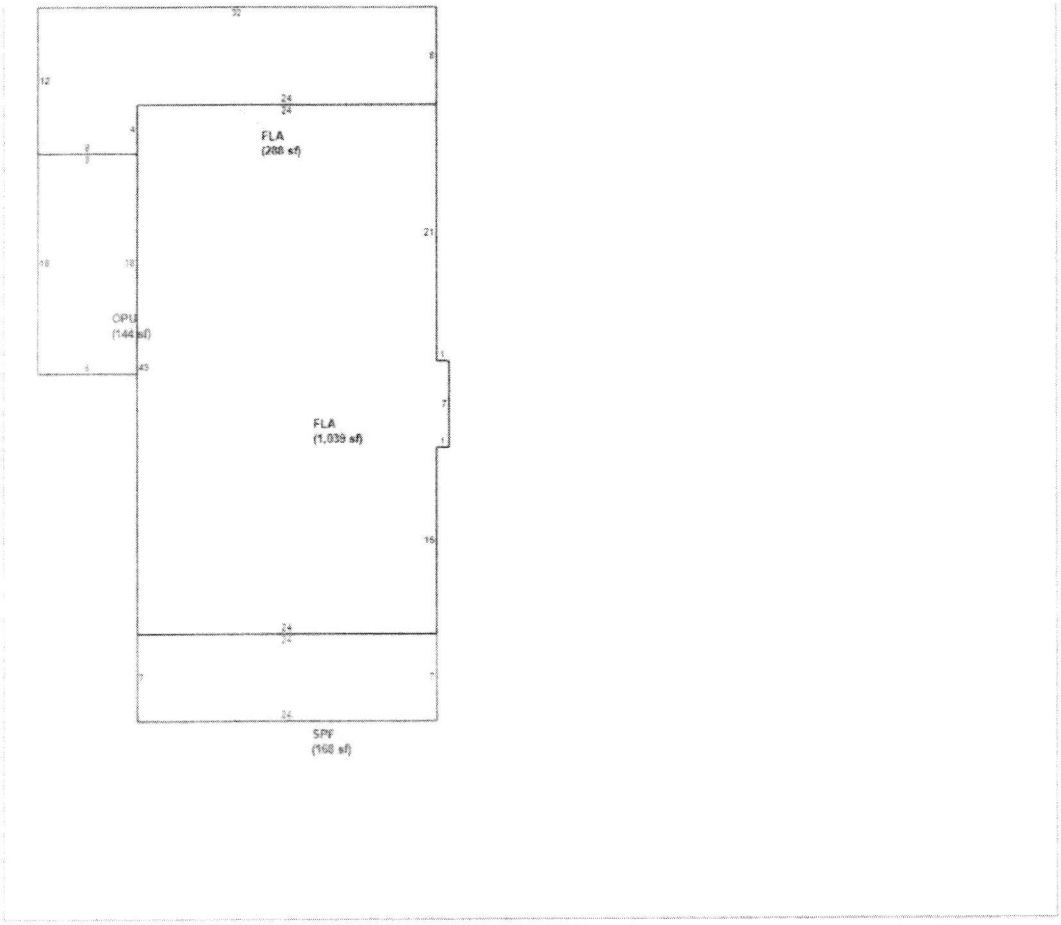

NOTE: Information on this Property Record Card is compiled and used by the Lake County Property Appraiser for the sole purpose of ad valorem property tax assessment administration in accordance with the Florida Constitution, Statutes, and Administrative Code. The Lake County Property Appraiser makes no representations or warranties regarding the completeness and accuracy of the data herein, its use or interpretation, the fee or beneficial/equitable title ownership or encumbrances of the property, and assumes no liability associated with its use or misuse. See the posted Site Notice.

Copyright © 2014 Lake County Property Appraiser. All rights reserved.
Property data last updated on March 21, 2022.
Site Notice

ROOF COVERAGE AREA

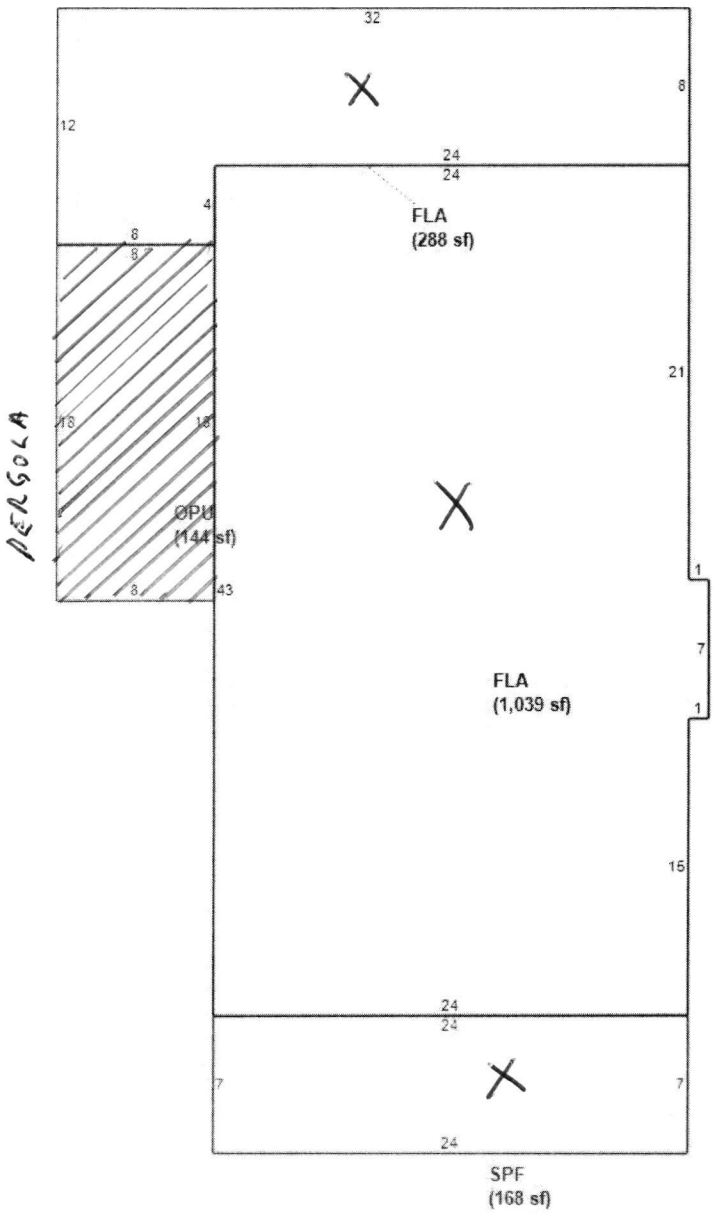

NOT TO BE INCLUDED

X - NEW ROOF TO BE INSTALLED

Eustis Roofing
15311 Old US Hwy 441 Suite A
Tavares, FL 32778
Phone: (352) 343-4240
Fax: (352) 742-1173

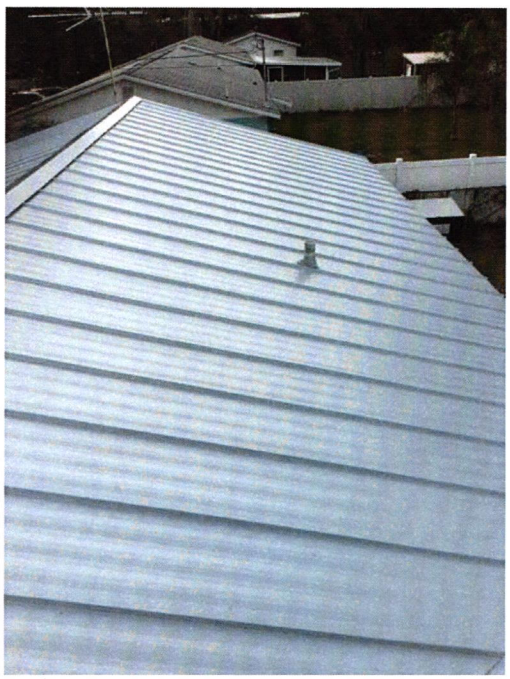

SAMPLE PICTURES OF
STANDING SEAM ROOF
SIMILAR COLOR

Eustis Roofing
15311 Old US Hwy 441 Suite A
Tavares, FL 32778
Phone: (352) 343-4240
Fax: (352) 742-1173

EUSTIS ROOFING
EST. 1959

EXAMPLE

SAMPLE PICTURE OF
STANDING SEAM ROOF
SIMILAR COLOR

Eustis Roofing
15311 Old US Hwy 441 Suite A
Tavares, FL 32778
Phone: (352) 343-4240
Fax: (352) 742-1173

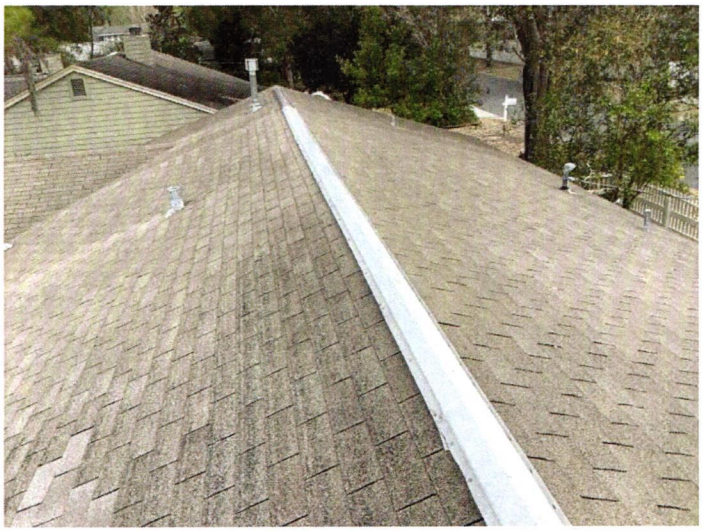

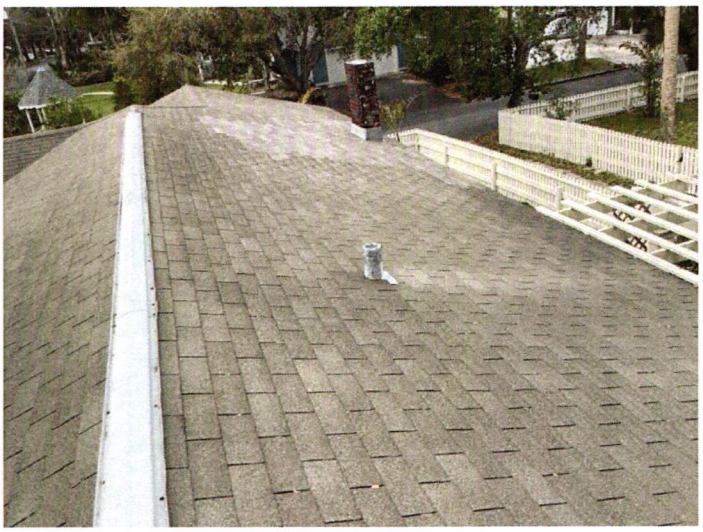

Office of Building Services

Product Approval

315 West Main St., Tavares, FL 32778 · PO Box 7800
Phone (352)343-9653 · Website www.lakecountyfl.gov

All plans submitted for plan review must include information meeting the requirements of Florida Statutes 553.842, and Florida Administrative Code 9B-72 for eight product groups:

Windows	Exterior Doors	Shutters	Structural Components
Skylights	Panel Walls	Roofing	New Building Envelope Products *(affecting structural integrity of building)*

Florida product approval numbers may be obtained from suppliers or by visiting the Department of Community Affairs' Florida Building Code website at **www.floridabuilding.org**. Use the Product Approval link to search for current approved products.

PRODUCT TYPE	APPROVAL NUMBER	MANUFACTURER
SNAPLOCK METAL	5852	EUSTIS ROOFING
UNDERLAYMENT	23090	FT PLATINUM HIGH TEMP

***Note:** This document must be on jobsite for the inspections. This document was reviewed for code compliance, this does not relieve the applicant from correcting errors and omissions and complying with the current Florida Building Code.*

Eustis Roofing Product Approval FL 5852 - Snap lock Metal

1" NAILSTRIP, 24 GA., 16" WIDE LOAD TABLE OVER PLYWOOD

EUSTIS ROOFING

Buildings having a Roof Mean Height≤ 20'-0"; Roof Slope: 3"/12" -6"/12" Gable Roof
Wind Speeds 90-120 mph, Exp C, I = 1.0, based on FLORIDA BUILDING CODE 2007

1" NAILSTRIP, 24 GA., 16" WIDE, FASTENER SPACING						
ZONE	FASTENER	SUBSTRATE	WIND SPEED ZONE			
			90	100	110	120
			ON CENTER SPACING	ON CENTER SPACING	ON CENTER SPACING	ON CENTER SPACING
ZONE 1	#10-12 x 1"	15/32" CDX	18"	18"	18"	18"
ZONE 2	#10-12 x 1"	15/32" CDX	18"	18"	18"	18"
ZONE 3	#10-12 x 1"	15/32" CDX	18"	18"	12"	12"

1) **PANEL DESCRIPTION:** 1" SNAP LOCK RIB WITH NAILSTRIP, MIN. 24 GA., 16" MAX WIDTH, 1" TALL RIB.
2) **PANEL ROLLFORMER:** KNUDSON MFG, INC.
3) **PANEL FASTENER:** (1) #10-12, TYPE A PANCAKE HEAD.
4) **MAXIMUM ALLOWABLE PANEL UPLIFT PRESSURE:** 88.5 PSF AT 12" O.C., 63.5 PSF AT 18" O.C., PRESSURE BASED ON UL 580/UL 1897 TESTING
5) **PLYWOOD DECKING:** MIN. 15/32" THICK, APA RATED PLYWOOD, GRADE C-D. PLYWOOD MUST BE DESIGNED IN ACCORDANCE WITH FBC 2007.

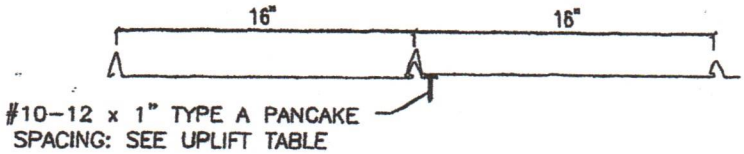

FASTENER LOCATION AT PANEL INTERIOR

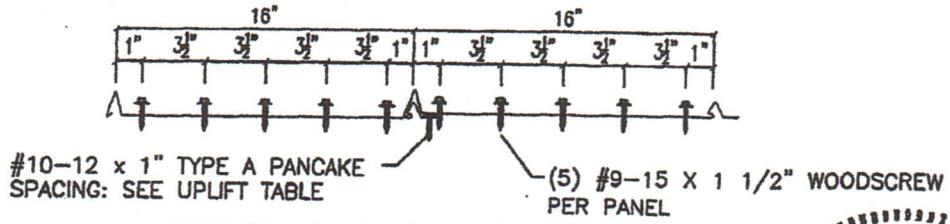

FASTENER LOCATION AT LOW EAVE AND ENDLAP

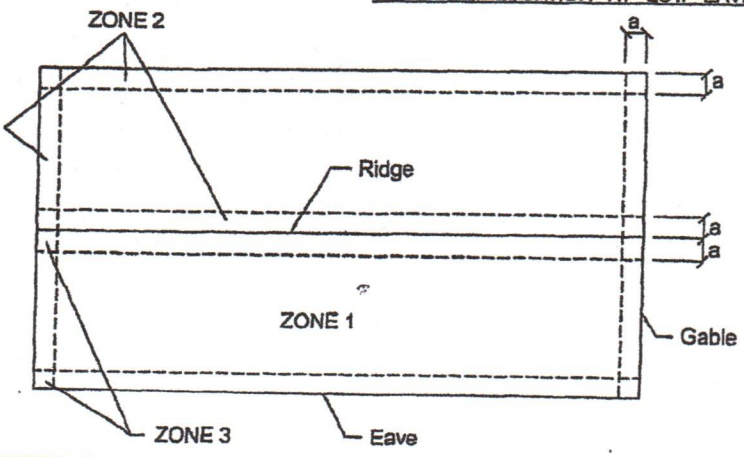

TERRENCE E. WOLF
LICENSE
No.44923
STATE OF FLORIDA
PROFESSIONAL ENGINEER

State of Florida
C.O.A.
26778

DEC 24 2008

Note: Dimension (a) is defined as 10% of the minimum width of the building or 40% of the mean height of the roof, whichever is smaller, however, (a) cannot be less than either 4% of the minimum width of the building or 3 feet.

1" Nail Strip 24 Ga. 16" wide over plywood

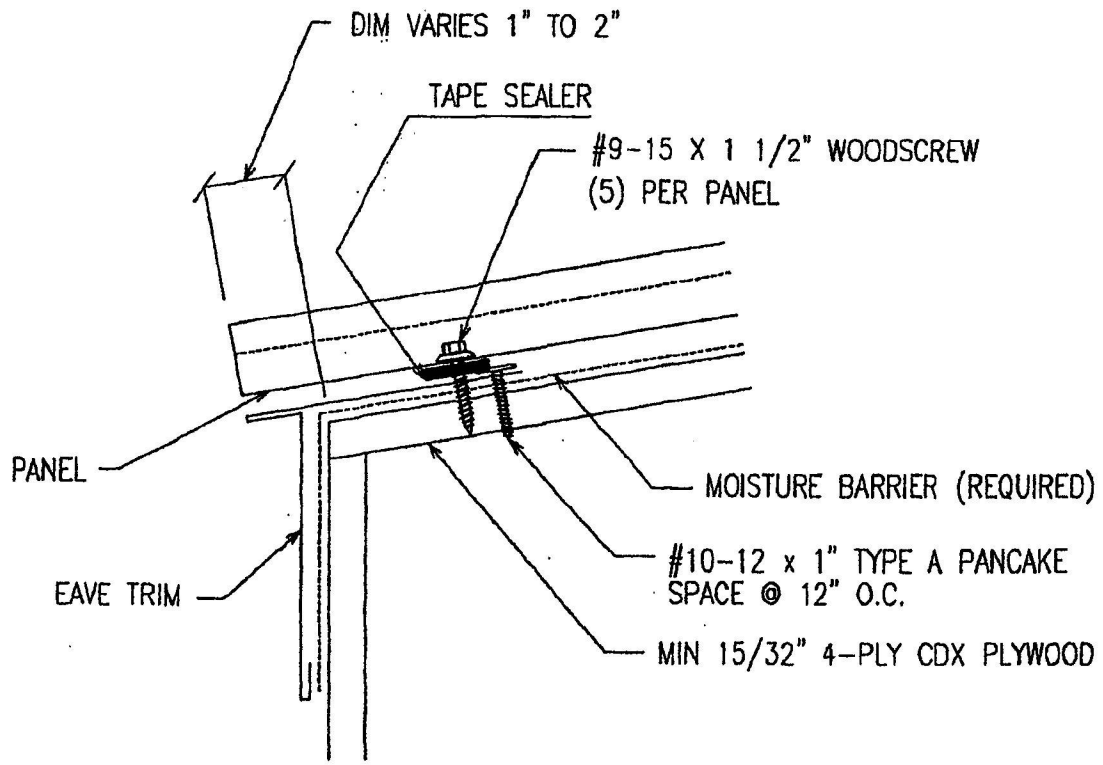

1 SECTION THRU EAVE

TERRENCE E. WOLFE
LICENSE
No. 44923
STATE OF
FLORIDA
PROFESSIONAL ENGINEER

State of Florida
C.O.A.
26778

DEC 24 2008

Eustis Roofing Company, Inc,
15312 Old Hwy 441
Tavares, FL 32778
(334) 678-0038

Eustis Roofing Company Inc
Lake Wade

1" Nail Strip 24 Ga. 16" wide over plywood

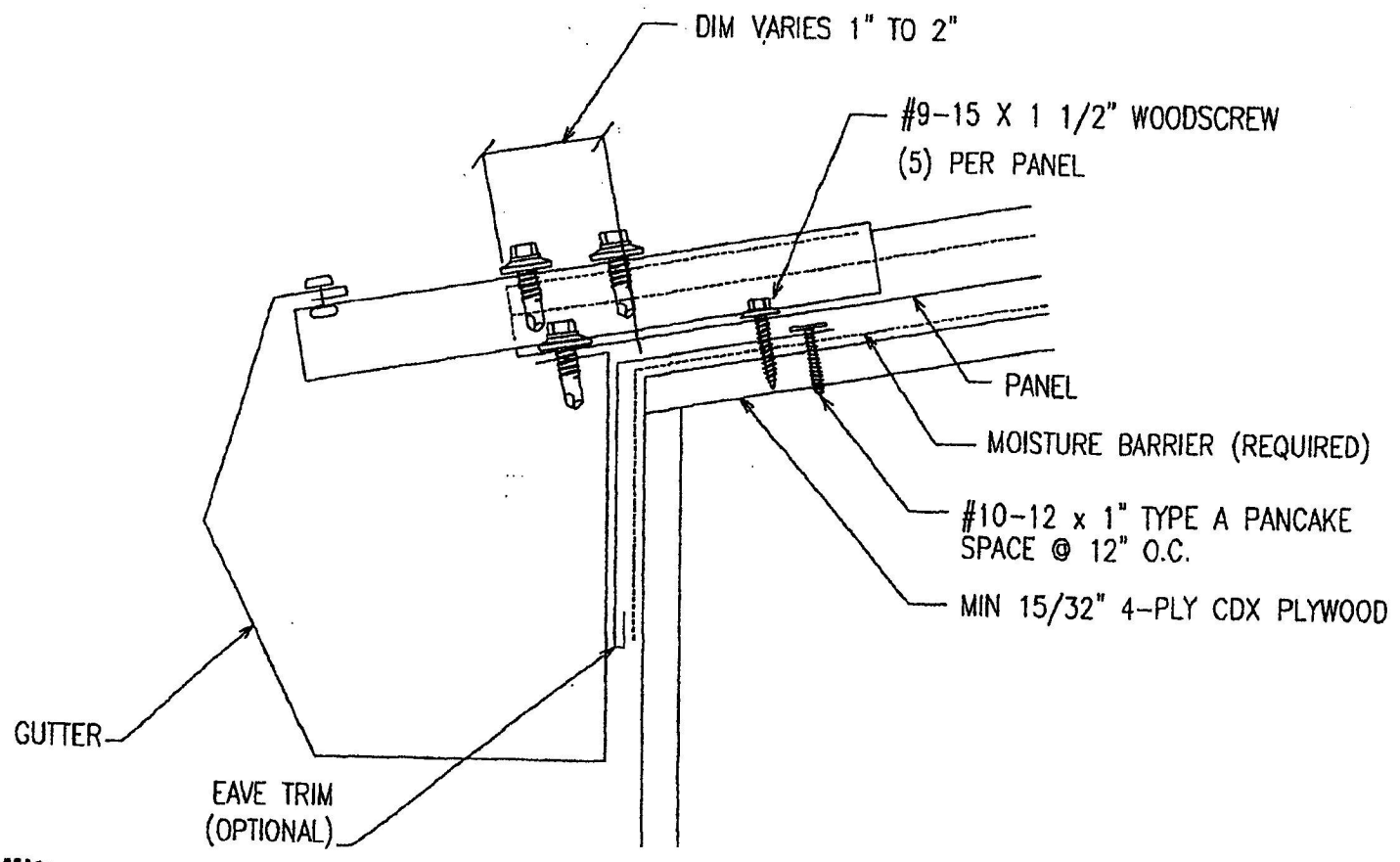

2 SECTION THRU EAVE W/ GUTTER

TERRENCE E. WOLFE
LICENSE
No.44923
STATE OF
FLORIDA
PROFESSIONAL ENGINEER
State of Florida
C.O.A.
26778

DEC 24 2008

Eustis Roofing Company, Inc,
15312 Old Hwy 441
Tavares, FL 32778
(334) 678-0038

1" Nail Strip 24 Ga. 16" wide over plywood

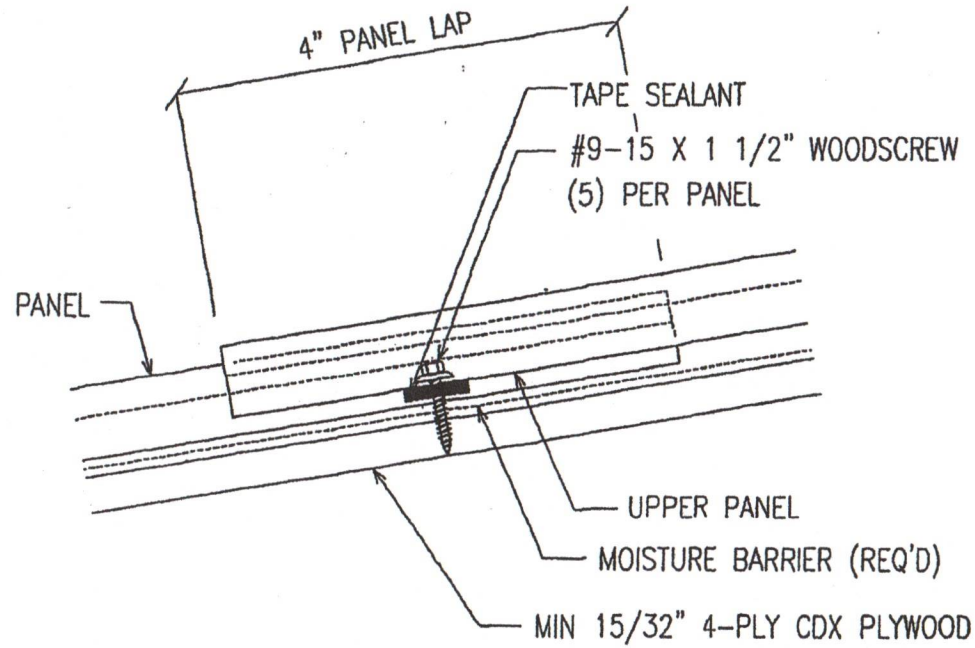

3 SECTION THRU PANEL ENDLAP

TERRENCE E. WOLFE
LICENSE
No. 14923
STATE OF
FLORIDA
PROFESSIONAL ENGINEER
State of Florida
C.O.A.
26778

DEC 24 2008

Eustis Roofing Company, Inc,
15312 Old Hwy 441
Tavares, FL 32778
(334) 678-0038

1" Nail Strip 24 Ga. 16" wide over plywood

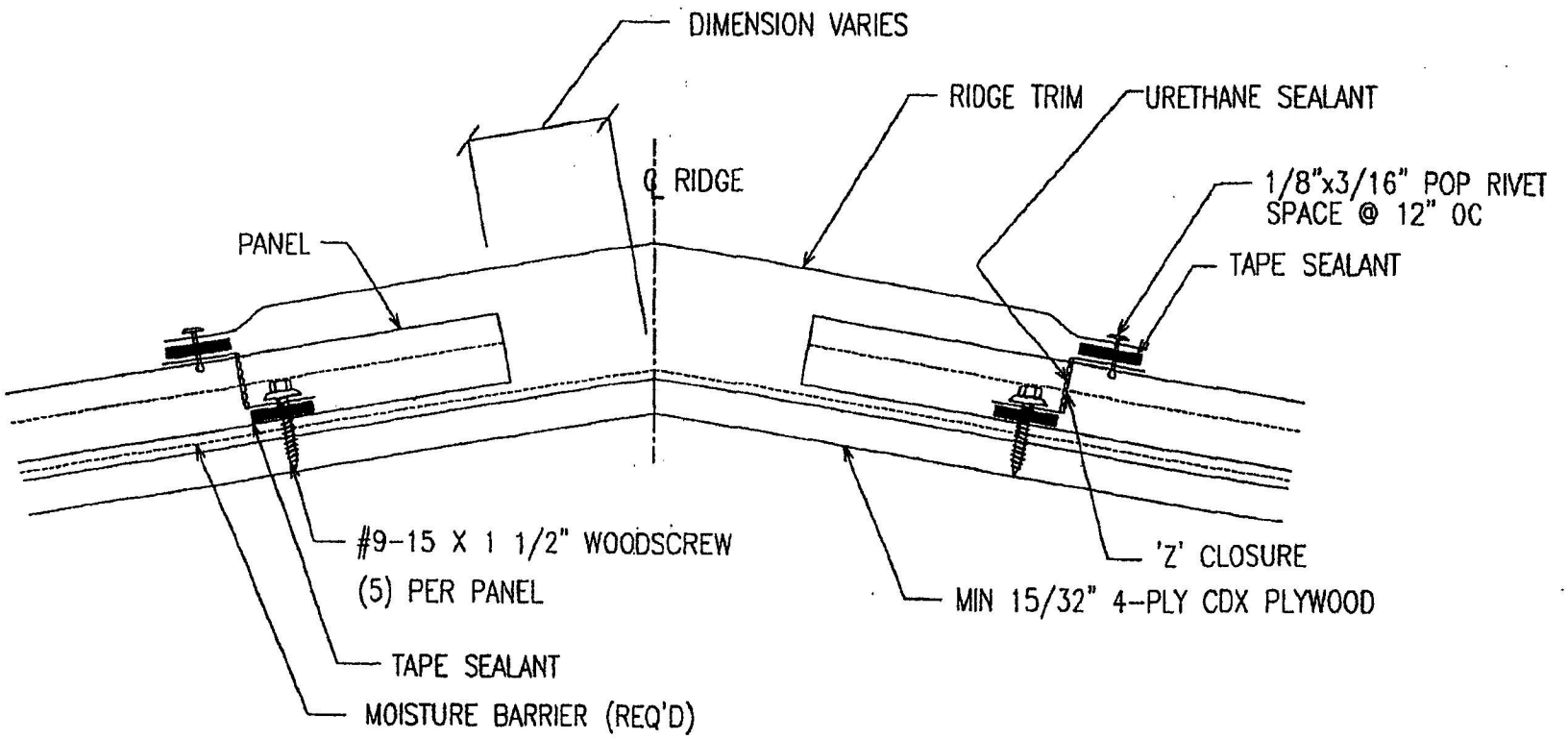

4 SECTION THRU RIDGE

TERRENCE E. WOLFE
LICENSE
No. 44923
STATE OF
FLORIDA
PROFESSIONAL ENGINEER
State of Florida
C.O.A.
26774

DEC 24 2008

Eustis Roofing Company, Inc.
15312 Old Hwy 441
Tavares, FL 32778
(334) 678-0038

1" Nail Strip 24 Ga. 16" wide over plywood

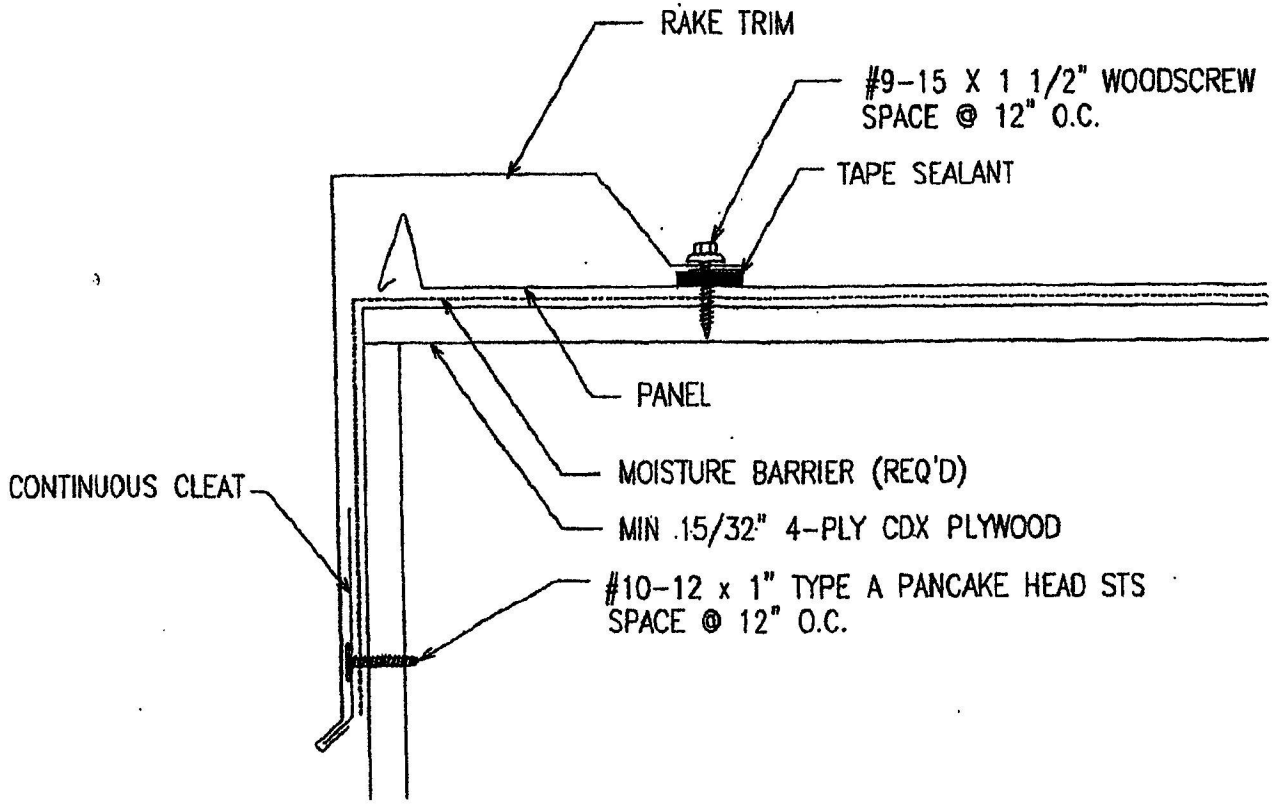

5 SECTION THRU RAKE

TERRENCE E. WOLFE
LICENSE
No. 44923
STATE OF
FLORIDA
PROFESSIONAL ENGINEER
C.O.A.
DEC 24 2008

Eustis Roofing Company, Inc,
15312 Old Hwy 441
Tavares, FL 32778
(334) 678-0038

1" Nail Strip 24 Ga. 16" Wide over plywood

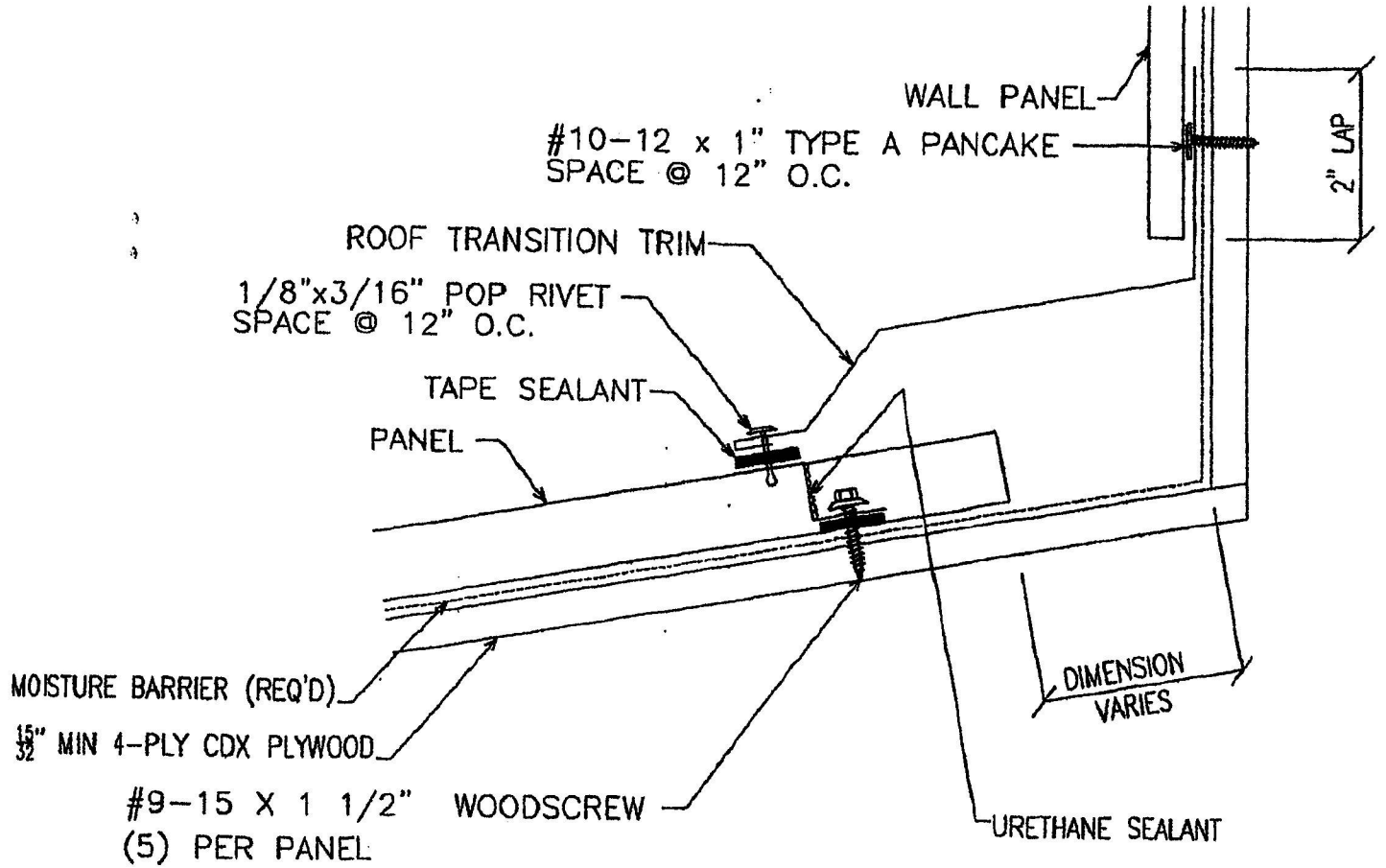

8 SECTION THRU HIGH SIDE TRANSITION

TERRENCE E. WOLFE
LICENSE
No. 44923
STATE OF
FLORIDA
PROFESSIONAL ENGINEER
State of Florida C.O.A. # 26778

DEC 24 2008

Eustis Roofing Company, Inc,
15312 Old Hwy 441
Tavares, FL 32778
(334) 678-0038

1" Nail Strip 24 Ga. 16" wide over plywood

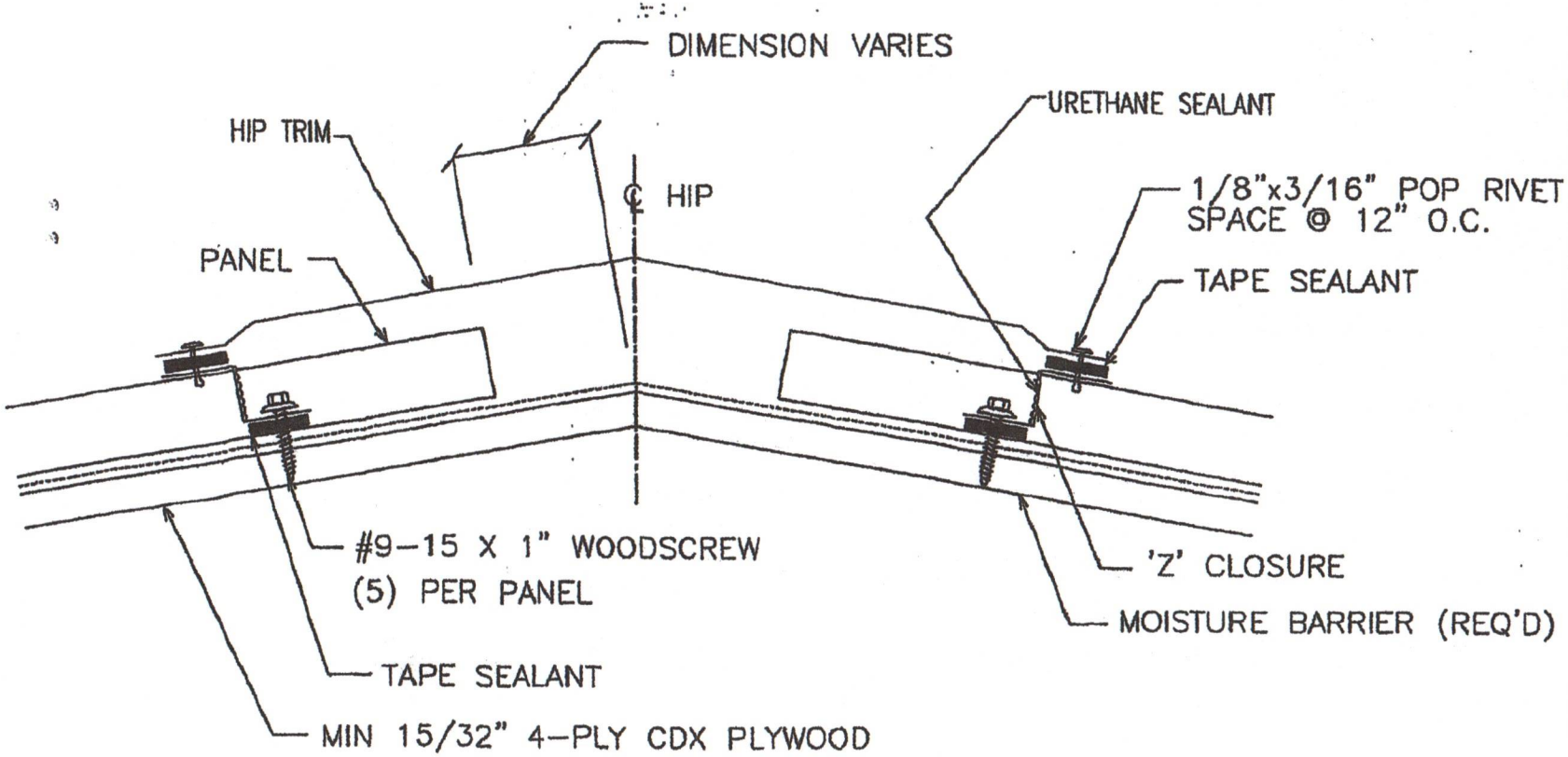

9 SECTION THRU HIP

TERRENCE E. WOLFE
LICENSE
No. 14923
STATE OF
FLORIDA
PROFESSIONAL ENGINEER
State of Florida
C.O.A.
26778

DEC 24 2008

Eustis Roofing Company, Inc,
15312 Old Hwy 441
Tavares, FL 32778
(334) 678-0038

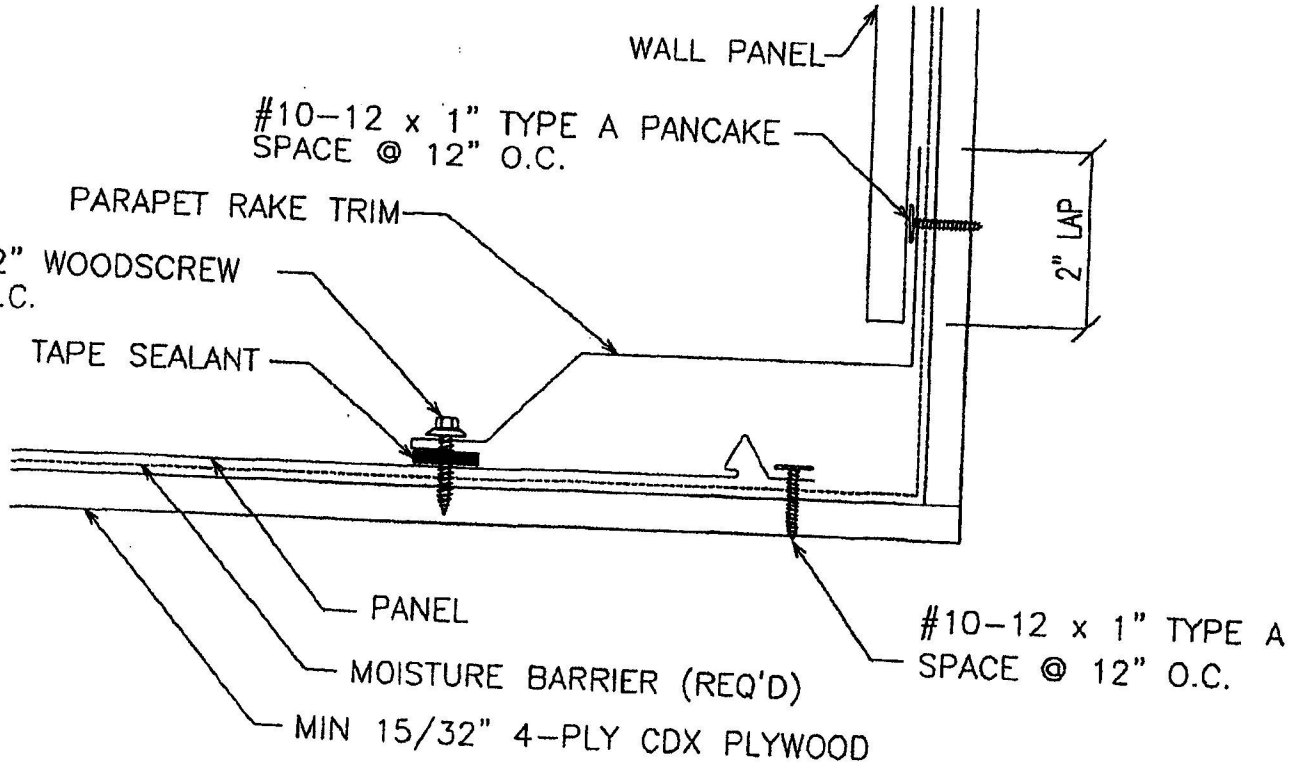

(10) SECTION THRU RAKE PARAPET

TERRENCE E. WOLF
LICENSE
No. 44923
STATE OF
FLORIDA
PROFESSIONAL ENGINEER

State of Florida
C.O.A.
26778

DEC 24 2008

Eustis Roofing Company, Inc,
15312 Old Hwy 441
Tavares, FL 32778
(334) 678-0038

1" Nail Strip 24 Ga. 16" wide over plywood

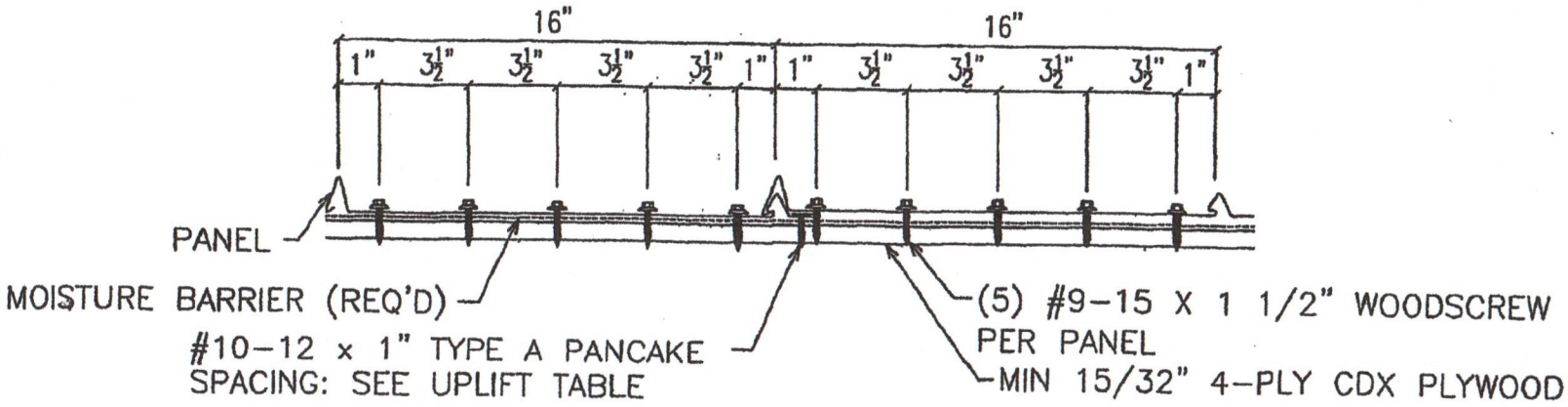

FASTENER LOCATION AT LOW EAVE AND ENDLAP

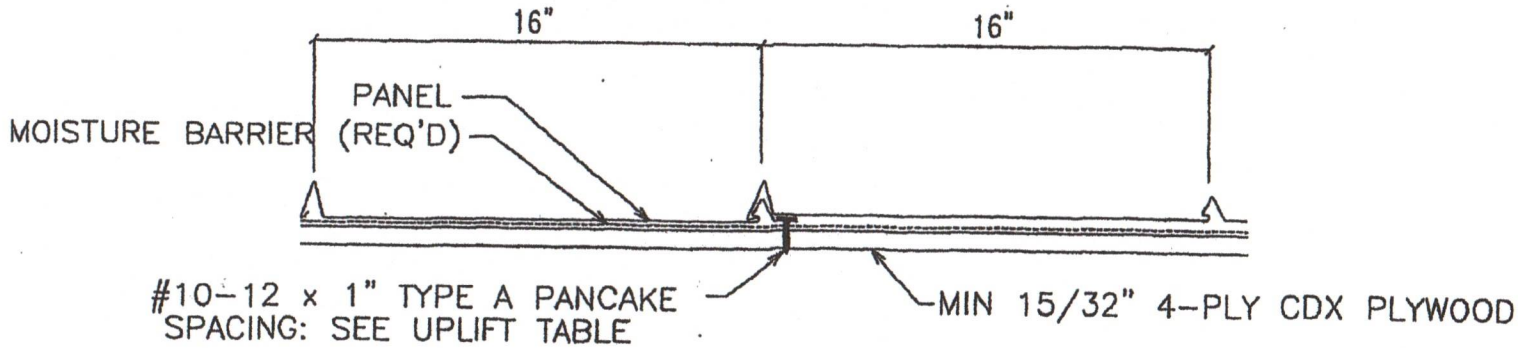

FASTENER LOCATION AT PANEL INTERIOR

(11) 24 GA. NAIL STRIP, 16" WIDE FASTENER SPACING

TERRENCE E. WOLFE
LICENSE
No. 44923
STATE OF
FLORIDA
PROFESSIONAL ENGINEER

State of Florida
C.O.A.
26776

DEC 24 2008

Eustis Roofing Company, Inc,
15312 Old Hwy 441
Tavares, FL 32778
(334) 678-0038

PLATINUM HT-SA

Self Adhering Synthetic Roofing Underlayment

Installation Instructions:

Caution: Always follow Safety Instruction, Building Codes and Safe Work Practices issues by the local Govt. bodies (e.g. OSHA / WCB)

PLATINUM HT-SA must be covered by a primary roof (Asphalt & Synthetic Shingles, Metal Roofing, Tiles, Slate, and Cedar Shakes) within 180 days. For best results **HT-SA** should be installed on a dry deck when the air, membrane, and substrate temperature is over 40°F (4.4°C). Priming is not required for attaching to wood deck when the temperature is above 40°F. Concrete and masonry decks should be primed with a solvent or a water based primer that meets ASTM D41 for asphalt based self-adhesive membranes. For repairs or low slope installations where it is required to overlap the membrane onto the GRIPSPOT™ walking surface such as on the end laps it is recommended that primer is used to increase adhesion.

For cold weather applications below 40°F (4.4°C) a primer should be used and the laps blind nailed. Blind nail with 3/8" head roofing nails of 1" or longer in the 3" over lap area.

HT-SA is recommend for roof slope applications 2:12 and above. For steep slope applications (6:12 or greater) or when installing at temperatures greater than 100°F (38°C) it is recommended to blind nail the overlap area as instructed above for cold weather applications.

HT-SA is to be laid out horizontally (parallel) to the eave with the printed side up, using 3" side laps and 6" end laps.

HT-SA may also be installed vertically. For vertical installation anchor with 3/8" head roofing nails along the upper most edge 3 inches down with 6 equally spaced nails across the 36" width. Ensure roofing nails are perpendicular to the roof deck so that the head lays flat and seals well to the top surface of the **HT-SA** using 3" side laps and 6" end laps.

Always work from the low point to the high point of the roof. Apply the membrane in valleys before the membrane is applied to the eaves.

Cut **HT-SA** to manageable lengths and position parallel to the edge of the roof. Peel back one side of the split release sheet approximately 4 in (10 cm) then apply as positioned to the roof deck. Continue peeling back one side of the split release sheet. Press down on **HT-SA** with a small rubber roller to increase adhesion to the roof deck. Peel back the remaining half of the split release liner and press down on the **HT-SA** to adhere to the roof deck again using a small roller to improve adhesion.

For eave installation **HT-SA** should be applied over the metal drip edge at the eave. Do not fold **HT-SA** over the roof edge unless the edge is subsequently covered over by a drip edge or other flashing material. It is recommended that **HT-SA** extend from the eave up the roof to a point 24" inside the exterior wall. This should be above the maximum ice dam buildup line in most areas. Consult your local building code for specific requirements.

For high elevation, high wind or wind driven rain it is recommended to cover the entire roof deck with **HT-SA**.

Safety Notification:

FT Synthetics products are designed with the GRIPSPOT technology for better skid protection for the roofer but product may become slippery due to high moisture, frost, rain, water, dust, debris or other conditions. Use precautions when working on the roof. Follow all local and federal safety codes when installing any roofing system including FT Synthetics products. Failure to adhere to those procedures may result in serious injury or even death.